MAKING MODERN LIVING POSSIBLE

Quick Selection 2012/2013

Automatic controls, electronic controls, compressors, condensing units and packages **for all refrigerants**

This catalogue covers the most popular refrigeration products and code numbers.

>5000

code numbers in one catalogue

Simply the most easy way to find the code numbers you need for your specific application – all in one place.

>100

products in one catalogue

The most frequently used refrigeration products from the extended Danfoss ranges have been collected in one catalogue. A timesaving way to find exactly what you are looking for. A part of your toolbox.

www.danfoss.com

Coolselector® – Select the right component the coolest way

As the world gets more complicated we all need support to make the right choices.
Danfoss helps you make the right selections also for the other components that you will need in your professional daily life.
Coolselector® calculates for you the performance of the component at your conditions, not just according to the standards.

Select the right component the coolest way

Do you pick your solenoid valve for your cold room by connection size alone?
Maybe you could actually go for a size smaller, or maybe the cold room would have done better if you had optimized the selection of that particular valve to the flow. Most professionals know that selecting a thermostatic expansion valve can turn out to be a tricky task if the conditions are not exactly standard conditions.
You will need to take superheat, sub cooling and pressure drop into consideration to find the optimal valve with the right orifice.
But also other components require consideration before selecting the best valve for the purpose. Even the solenoid valve should be checked for the specific performance under the conditions you intend to expose it to.

Coolselector® helps you optimize the choice of component and even tells you how the component behaves at the conditions given.
With the new version of Coolselector® you have all the components required to control a commercial refrigeration plant. Danfoss have now included the well-known compressor and condensing unit selection program RS+3 in Coolselector® which means that you no longer have to open several programs to calculate a compressor, a solenoid valve and an expansion valve. You can now do this in just one program.
The new section with compressors and condensing units also includes compressors for heat pumps which mean that you easily can select the best suited compressor for heat pump applications.
Danfoss have on purpose kept the familiar and user friendly interface from RS+3 and just extended the content in accordance with the additional compressors. Coolselector® will continue development and enhancement and offers you automatic-updates also in future.
Please do not hesitate and go to the web address: coolselector.danfoss.com to down-load the program.

Table of contents

Thermostatic expansion valves

Thermostatic expansion valves ... T2/TE2 ... 6
Thermostatic expansion valves ... TE5-55 ... 10
Thermostatic expansion valves ... TUA/TUAE/TCAE ... 14
Thermostatic expansion valves ... TUB/TUBE ... New 20
Thermostatic expansion valves ... PHT ... 24
Thermostatic expansion valves – Product overview ... New 27

Electronically operated

Expansion valves ... AKV ... 28
Electronic expansion valves ... ETS 6 ... New 32
Electronic expansion valves ... ETS 12.5 - 400 ... 34
Electrically operated valves for CO_2 ... CCM ... New 38
Electrically operated valves for transcritical and subcritical CO_2 appl. ... CCMT ... New 40
Electrically operated suction modulating control valves ... KVS ... New 42

2. Solenoid valves and coils

Solenoid valves/coils ... EVR/EVRH ... New 46
Solenoid valves/coils ... EVRS/EVRST ... New 48
Solenoid valves/coils ... EVRA/EVRAT ... 52
4-way reversing valves ... VHV/STF ... 56

3. Pressure controls and thermostats

Pressure controls/ Temperature controls ... KP ... 58
Cartridge pressure controls ... ACB ... 60
Temperature controls ... UT ... 62
Pressure controls/ Temperature controls ... RT ... 64
Differential pressure controls ... MP ... New 68

4. Pressure regulators

Evaporator pressure regulators ... KVP ... 70
Condensing pressure regulators ... KVR/NRD ... 72
Condenser fan speed controllers ... XGE/RGE ... 74
Crankcase pressure regulators ... KVL ... 76
Receiver pressure regulators ... KVD ... 78
Capacity regulators ... KVC ... 80
Capacity regulators ... CPCE ... 82
Flexline™ Motor valves ... ICM 20-150 ... 84
Flexline™ Pilot controlled servo valves ... ICS 25-150 ... 88
Pilot valves for servo operated main valves ... New 94
Flexline™ Valve stations ... ICF ... New 96
Liquid level sensors ... AKS 4100/4100U ... New 104

5. Water valves

Pressure controlled water valves ... WVFX, WVO, WVS ... 108
Thermostatic controlled water valves ... AVTA ... 110

6. Line components – Commercial

Ball valves ... GBC ... New 112
Ball valves for CO_2 ... GBC ... New 114
Shut-off valves ... BM ... New 116
Check valves ... NRV/NRVH ... 118
Liquid line filter driers ... DCL ... 120
Liquid line filter driers ... DML ... 122
Filter driers ... DCR ... 124
Bi-flow filter driers ... DMB ... 128
Combined filter driers and receivers ... DMC ... 130
Burn-out filter driers ... DAS ... 132
Sight glasses ... SG+ ... New 134
Sight glasses ... SG ... New 136
Oil separators ... OUB ... 140
Heat exchanger ... HE ... 142

7. Line components – Industrial

Flexline™ Stop valves ... SVA-S/SVA-L ... New 144
Stop needle valves ... SNV-ST/SNV-SS ... New 148
Flexline™ Filters ... FIA ... New 150
Flexline™ Regulating valves ... REG-SA/REG-SB ... 154
Flexline™ Stop check and Check valves ... SCA-X/CHV-X ... New 158
Check valves ... NRVA ... New 160
Safety relief valves ... SFA 15 ... New 162
Safety relief valves ... SFV ... New 164
Double stop valves ... DSV ... New 166
Quick closing oil drain valves ... QDV ... 168
Liquid level glasses ... LLG ... New 170

8. Gas Detector

Gas detectors ... GD ... 172
Gas sensors ... DGS ... New 174

9. Electronic controls

Electronic controls overview ... New 176
Temperature controller ... EKC 102 ... 178
Refrigeration controllers ... EKC 202 ... New 180
Refrigeration controllers ... EKC 302 ... New 182
Universal refrigeration controller ... AK-CC 210 ... 184
Universal refrigeration controller ... AK-CC 250A/250B ... New 186
Universal refrigeration controller ... AK-CC 350 ... New 188
Controller for applicance control ... AK-CC 450 ... 190
Controller for appliance control ... AK-CC 550A ... 192
Controller for evaporator control ... AK-CC 750 ... 194
Refrigeration controllers ... EKC 315A ... 196
Superheat controller ... EKC 312 ... New 198
Superheat controller ... EKC 316A ... 200
Superheat controller ... EKD 316 ... New 202
Controller for temperature control of unpacked food products ... EKC 368 ... 204
Liquid level controller ... EKC 347 ... 206
Capacity controller ... EKC 331T ... 208
Capacity controller ... AK-PC 530 ... 210
Capacity controller ... AK-PC 781 ... 212
Optyma™ Control ... AK-RC 101/AK-RC 103 ... 214
Liquid Level Sensor ... AKS 4100/4100U ... New 218
System manager ... AK-SM 350 ... 222

10. Sensors and transmitters

Sensors and transmitters ... EKS/AKS ... 224

11. Compressors

Compressors ... 226
Direct current compressors ... 228
Reciprocating compressors – Household & Light commercial ... 230
Reciprocating compressors – Commercial ... 240
Scroll compressors – H series ... 244
Scroll compressors – SH series ... 252
Scroll compressors – Heat pumps ... New 256
Reciprocating compressors - Variable speed ... New 258

12. Condensing units

Optyma™ condensing units ... New 265
Optyma™ Control ... AK-RC 101/AK-RC 103 ... 294
Optyma Plus™ condensing units ... 299
Optyma Plus™ – new generation condensing units ... New 330

Extra points

CO_2 overview products ... New 350
Danfoss hydrocarbon product range ... New 352

Table of contents – Type

ACB ... 58
ACB ... 60
AK-CC 210 ... 184
AK-CC 250A/250B ... 186
AK-CC 350 ... 188
AK-CC 450 ... 190
AK-CC 550A ... 192
AK-CC 750 ... 194
AK-PC 530 ... 210
AK-PC 781 ... 212
AK-RC 101/AK-RC 103 ... 214, 294
AK-SM 350 ... 222
AKS 4100/4100U ... 104, 218
AKV ... 28
AVTA ... 110
BD ... from 229
BM ... 116
CCM ... 38
CCMT ... 40
CO_2 overview products ... 348
Compressors ... 226
CPCE ... 82
Danfoss hydrocarbon product range ... 350
DAS ... 132
DCL ... 120
DCR ... 124
DGS ... 174
Direct current compressors ... 228
DMB ... 128
DMC ... 130
DML ... 122
DSV ... 166
EKC 102 ... 178
EKC 202 ... 180
EKC 302 ... 182
EKC 312 ... 198
EKC 315A ... 196
EKC 316A ... 200
EKC 331T ... 208
EKC 347 ... 206
EKC 368 ... 204
EKD 316 ... 202
EKS/AKS ... 224
Electronic controls overview ... 176
ETS 12.5 - 400 ... 34
ETS 6 ... 32
EVR/EVRH ... 46
EVRA/EVRAT ... 52
EVRS/EVRST ... 48
FIA ... 150
FR ... from 230
GBC ... 112, 114
GD ... 172
GS ... from 230
HCP ... from 245
HE ... 142
HHP ... from 256
HLP ... from 245
HRP ... from 245
ICF ... 96
ICM 20-150 ... 84
ICS 25-150 ... 88
KP ... 58
KVC ... 80
KVD ... 78
KVL ... 76
KVP ... 70
KVR/NRD ... 72
KVS ... 42
LLG ... 170
MLM ... from 253

Table of contents – Type

MLZ ..... from 253
MP 68
MT ..... from 240
MTM ..... from 240
MTZ ..... from 240
NL ..... from 230
NRV/NRVH 118
NRVA 160
NTZ ..... from 240, 242
OP-LCHC ..... from 266
OP-LGHC ..... from 266
OP-LPHC ..... from 300
OP-LPHM ..... from 332
OP-MCHC ..... from 268
OP-MCUC ..... from 272
OP-MCZC ..... from 270
OP-MCZC ..... from 276
OP-MGUC ..... from 270
OP-MGUD ..... from 260
OP-MGZC ..... from 270
OP-MGZC ..... from 276
OP-MGZD ..... from 270
OP-MGZD ..... from 276
OP-MPGM ..... from 336
OP-MPHC ..... from 302
OP-MPHM ..... from 334
OP-MPUC ..... from 304
OP-MPUM ..... from 334
OP-MPZC ..... from 302
OP-UCGC ..... from 276
Optyma Plus™ – new generation condensing units 330
Optyma Plus™ condensing units 299
Optyma™ condensing units 265
Optyma™ Control 294
OUB 140
PHT 24
Pilot valves for servo operated main valves 94
PL ..... from 230
QDV 168
Reciprocating compressors - Variable speed 258
Reciprocating compressors – Commercial 240
Reciprocating compressors – Household & Light commercial 230
REG-SA/REG-SB 154
RT 64
SC ..... from 230
SCA-X/CHV-X 158
Scroll compressors – H series 244
Scroll compressors – Heat pumps 256
Scroll compressors – SH series 252
SFA 15 162
SFV 164
SG 136
SG+ 134
SH ..... from 252
SLV ..... from 232
SM ..... from 247
SNV-ST/SNV-SS 148
SVA-S/SVA-L 144
SY ..... from 247
SZ ..... from 248
T2/TE2 6
TE5-55 10
Thermostatic expansion valves – Product overview 27
TL ..... from 230
TUA/TUAE/TCAE 14
TUB/TUBE 20
UT 62
VHV/STF 56
VTZ ..... from 258
WVFX, WVO, WVS 108
XGE/RGE 74

T2/TE2 – Thermostatic expansion valves

Thermostatic expansion valves regulate the injection of liquid refrigerant into evaporators. Injection is controlled by the refrigerant superheat. Therefore the valves are especially suitable for liquid injection in "dry" evaporators where the superheat at the evaporator outlet should always be kept constant.

Features

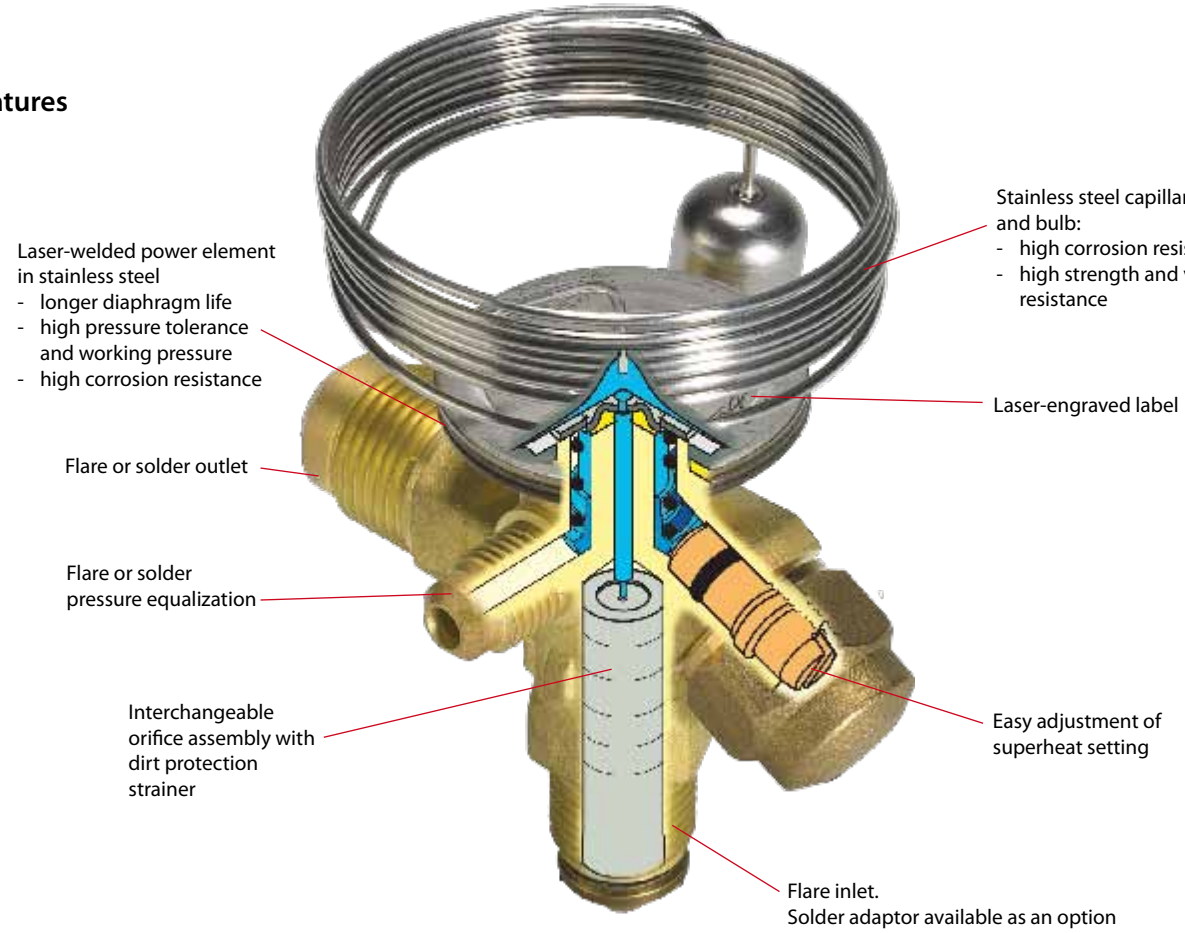

Applications	Advantages	Facts

· Traditional refrigeration
· Heat pump systems
· Air conditioning units
· Liquid coolers
· Transport refrigeration
	· Large temperature range. Equally applicable to freezing, refrigeration and air conditioning applications.
	· Interchangeable orifice assembly
	  · easy stocking
	  · easy capacity matching
	  · better service
		· Can be supplied with MOP (Max. Operating Pressure) Protects the compressor motor against excessive evaporating pressure during normal operation.
		· Valves for special temperature ranges can be supplied.
		· Flare / solder adaptor can be supplied.

Technical data and ordering

Thermostatic element with: bulb strap, without: orifice, strainer cone and nuts — Flare × flare connection

Refrigerant	Valve type	Pressure equalization Flare	Capillary tube	Connection		Code no.					
				Inlet × outlet		Range N −40 to +10°C		Range NM −40 to −5°C	Range NL −40 to −15°C	Range B −60 to −25°C	
			m	in. × in.	mm × mm	Without MOP	MOP +15°C	MOP 0°C	MOP −10°C	Without MOP	MOP −20°C
R22/R407C	TX 2	-	1.5	3/8 × 1/2	10 × 12	068Z3206	068Z3208	068Z3224	068Z3226	068Z3207	068Z3228
	TEX 2	¼ in.	1.5	3/8 × 1/2	10 × 12	068Z3209	068Z3211	068Z3225	068Z3227	068Z3210	068Z3229
R407C	TZ 2	-	1.5	3/8 × 1/2	10 × 12	068Z3496	068Z3516	-	-	-	-
	TEZ 2	¼ in.	1.5	3/8 × 1/2	10 × 12	068Z3501	068Z3517	-	-	-	-
R134a	TN 2	-	1.5	3/8 × 1/2	10 × 12	068Z3346	068Z3347	068Z3393	068Z3369	-	-
	TEN 2	¼ in.	1.5	3/8 × 1/2	10 × 12	068Z3348	068Z3349	068Z3392	068Z3370	-	-
R404A/R507	TS 2	-	1.5	3/8 × 1/2	10 × 12	068Z3400	068Z3402	068Z3406	068Z3408	068Z3401	068Z3410
	TES 2	¼ in.	1.5	3/8 × 1/2	10 × 12	068Z3403	068Z3405	068Z3407	068Z3409	068Z3404	068Z3411

Thermostatic element with: bulb strap, without: orifice, filter cone and nuts — Flare × solder connection

Refrigerant	Valve type	Pressure equalization Solder	Capillary tube	Connection		Code no.				
				Inlet Flare	Outlet ODF solder	Range N −40 to +10°C		Range NL −40 to −15°C	Range B −60 to −25°C	
			m			Without MOP	MOP +15°C	MOP −10°C	Without MOP	MOP −20°C
R22/R407C	TX 2	-	1.5	3/8 in.	1/2 in.	068Z3281	068Z3287	-	068Z3357	-
	TX 2	-	1.5	10 mm	12 mm	068Z3302	068Z3308	-	068Z3361	-
	TEX 2	¼ in.	1.5	3/8 in.	1/2 in.	068Z3284	068Z3290		068Z3359	-
	TEX 2	6 mm.	1.5	10 mm	12 mm	068Z3305	068Z3311	068Z3367	068Z3363	068Z3277
R407C	TZ 2	-	1.5	3/8 in.	1/2 in.	-	068Z3329	-	-	-
	TZ 2	-	1.5	10 mm	12 mm	068Z3502	068Z3514	-	-	-
	TEZ 2	¼ in.	1.5	3/8 in.	1/2 in.	068Z3446	068Z3447	-	-	-
	TEZ 2	6 mm.	1.5	10 mm	12 mm	068Z3503	068Z3515	-	-	-
R134a	TN 2	-	1.5	3/8 in.	1/2 in.	068Z3383	068Z3387	-	-	-
	TN 2	-	1.5	10 mm	12 mm	068Z3384	068Z3388	-	-	-
	TEN 2	¼ in.	1.5	3/8 in.	1/2 in.	068Z3385	068Z3389	-	-	-
	TEN 2	6 mm.	1.5	10 mm	12 mm	068Z3386	068Z3390	-	-	-
R404A/R507	TS 2	-	1.5	3/8 in.	1/2 in.	068Z3414	068Z3416	068Z3429	068Z3418	068Z3420
	TS 2	-	1.5	10 mm	12 mm	068Z3435	068Z3423	068Z3436	068Z3425	068Z3427
	TES 2	¼ in.	1.5	3/8 in.	1/2 in.	068Z3415	068Z3417	068Z3430	068Z3419	068Z3421
	TES 2	6 mm.	1.5	10 mm	12 mm	068Z3422	068Z3424	068Z3437	068Z3426	068Z3428

[1]) For R407C plants, please select valves from the dedicated R407C program

Orifice assembly

Valve type Orifice	R134a		R404A		R407C		R22		Code no.	
	kW	TR	kW	TR	kW	TR	kW	TR	Flare × Flare version	Solder adapter version
T2 Orif. 0X	0.68	0.19	0.64	0.18	0.92	0.26	0.90	0.25	068-2002	068-2089
T2 Orif. 00	1.2	0.34	1.3	0.37	1.8	0.51	1.8	0.51	068-2003	068-2090
T2 Orif. 01	2.1	0.59	2.6	0.75	3.5	1.0	3.5	0.99	068-2010	068-2091
T2 Orif. 02	2.5	0.73	3.7	1.1	4.8	1.4	4.7	1.3	068-2015	068-2092
T2 Orif. 03	4.3	1.2	6.3	1.8	8.1	2.3	8.0	2.3	068-2006	068-2093
T2 Orif. 04	6.4	1.8	9.9	2.8	12.4	3.5	12.1	3.5	068-2007	068-2094
T2 Orif. 05	8.4	2.3	13.0	3.7	16.5	4.7	16.7	4.8	068-2008	068-2095
T2 Orif. 06	10.1	2.9	15.5	4.4	19.7	5.6	19.7	5.6	068-2009	068-2096

The rated capacity is based on: Evaporating temperature t_e = +4.4 °C for range N, condensing temperature t_c = +38 °C, and refrigerant temperature ahead of valve t_l = +37 °C.

Solder adaptor without orifice assembly

Connection – ODF solder	Code no.
1/4 in.	068-2062
6 mm	068-2063
6 mm	068-4101[1])
3/8 in.	068-2060
10 mm	068-2061
10 mm	068-4100[1])

[1]) Including filter.

Filter

Filter type	Code no.
For flare connection	068-0003
For solder adaptor	068-0015

The adaptor is for use with thermostatic expansion valves T2 and TE2. When the adaptor is fitted correctly it meets the sealing requirements of DIN 8964.

The flare orifice in T2 and TE2 can be used with a solder adaptor when the orifice filter is replaced with a specific filter intended for solder adaptors. Only in this way the sealing requirements of DIN 8964 can be fulfilled.
Solder adaptors for filter driers (FSA) must not be used in the T2 inlet.

Bulb strap (delivered with the valve) and accessories

Type	Length	Max. diameter of suction line	Code no.
T2 / TE2 Accessories	110 mm	1 1/8" (28 mm)	068U3507
	190 mm	2" (50 mm)	067N3508

Capacities

Capacity in kW, range N -40 °C to +10 °C. Opening superheat sh= 4.4 K

		R134a					R404A					R407C					R22			
Valve type/ Orifice	Cond. temp.[3] [°C]	Capacity in [kW]					Capacity in [kW]					Capacity in [kW]					Capacity in [kW]			
		Evaporating temp. [°C]					Evaporating temp. [°C]					Evaporating temp. [°C]					Evaporating temp. [°C]			
		-30	-10	-5	0	5	-40	-35	-30	-10	0	-10	-5	0	5	10	-35	-30	0	5
T2 / 0X	25	0.54	0.62	0.62	0.61	0.58	0.55	0.58	0.61	0.65	0.62	0.90	0.90	0.88	0.86	0.81	0.79	0.82	0.81	0.76
T2 / 00		0.67	0.95	1.0	1.0	1.0	0.7	0.8	0.9	1.2	1.2	1.6	1.7	1.7	1.7	1.6	1.1	1.2	1.6	1.5
T2 / 01		0.92	1.5	1.6	1.7	1.8	1.0	1.2	1.4	2.2	2.4	2.8	3.0	3.2	3.3	3.3	1.5	1.7	2.9	2.9
T2 / 02		1.0	1.7	1.9	2.1	2.2	1.1	1.3	1.6	2.8	3.3	3.4	3.8	4.2	4.5	4.6	1.7	2.0	3.8	4.0
T2 / 03		1.7	2.9	3.2	3.5	3.7	1.9	2.2	2.7	4.7	5.5	5.7	6.4	7.1	7.6	7.9	2.9	3.3	6.4	6.7
T2 / 04		2.5	4.2	4.7	5.2	5.5	2.7	3.2	3.8	7.1	8.5	8.4	9.5	10.6	11.7	12.5	4.2	4.8	9.7	10.1
T2 / 05		3.3	5.6	6.2	6.8	7.3	3.5	4.2	5.0	9.4	11.2	11.0	12.5	14.0	15.4	16.3	5.4	6.3	13.1	13.7
T2 / 06		3.9	6.7	7.5	8.2	8.7	4.2	5.0	6.0	11.2	13.4	13.2	15.0	16.8	18.5	19.4	6.4	7.4	15.4	16.2
T2 / 0X	35	0.57	0.67	0.68	0.69	0.68	0.52	0.55	0.59	0.67	0.68	0.94	0.95	0.95	0.94	0.92	0.82	0.86	0.92	0.89
T2 / 00		0.69	1.0	1.1	1.2	1.2	0.67	0.78	0.88	1.3	1.3	1.7	1.8	1.8	1.9	1.9	1.1	1.2	1.8	1.8
T2 / 01		0.96	1.6	1.8	2.0	2.1	0.95	1.1	1.3	2.3	2.6	2.9	3.2	3.4	3.6	3.8	1.6	1.8	3.3	3.5
T2 / 02		1.1	1.9	2.1	2.4	2.6	1.1	1.3	1.5	2.9	3.6	3.5	4.0	4.5	4.9	5.3	1.8	2.1	4.4	4.7
T2 / 03		1.8	3.1	3.5	4.0	4.4	1.8	2.1	2.6	4.9	6.1	6.0	6.8	7.6	8.4	9.0	3.0	3.5	7.4	8.0
T2 / 04		2.6	4.6	5.2	5.9	6.5	2.6	3.1	3.8	7.5	9.5	8.7	10.0	11.4	12.9	14.2	4.4	5.1	11.2	12.1
T2 / 05		3.5	6.1	6.9	7.7	8.6	3.4	4.1	4.9	9.8	12.5	11.5	13.2	15.1	17.0	18.6	5.8	6.7	15.3	16.7
T2 / 06		4.1	7.2	8.2	9.2	10.2	4.0	4.8	5.8	11.7	14.9	13.8	15.9	18.1	20.4	22.2	6.8	7.8	17.9	19.7
T2 / 0X	45	0.57	0.69	0.71	0.73	0.74	0.46	0.51	0.54	0.65	0.68	0.94	0.96	0.97	0.97	0.97	0.84	0.88	0.98	0.97
T2 / 00		0.70	1.1	1.2	1.3	1.3	0.61	0.70	0.81	1.2	1.3	1.7	1.8	1.9	1.9	1.9	1.1	1.3	1.9	1.9
T2 / 01		0.97	1.7	1.9	2.1	2.3	0.86	1.0	1.2	2.2	2.7	2.9	3.2	3.5	3.8	4.0	1.6	1.9	3.6	3.8
T2 / 02		1.1	1.9	2.2	2.5	2.8	0.97	1.2	1.4	2.8	3.6	3.5	4.0	4.6	5.1	5.6	1.9	2.1	4.7	5.2
T2 / 03		1.8	3.3	3.7	4.2	4.7	1.6	2.0	2.4	4.8	6.2	6.0	6.9	7.8	8.7	9.5	3.1	3.6	8.1	8.9
T2 / 04		2.7	4.8	5.5	6.2	7.1	2.4	2.9	3.5	7.3	9.7	8.8	10.2	11.7	13.4	15.0	4.7	5.4	12.2	13.4
T2 / 05		3.6	6.3	7.2	8.2	9.3	3.2	3.8	4.6	9.6	12.9	11.7	13.5	15.6	17.7	19.8	6.1	7.0	16.7	18.7
T2 / 06		4.2	7.5	8.6	9.8	11.1	3.7	4.5	5.4	11.4	15.4	13.9	16.1	18.7	21.3	23.6	7.1	8.2	19.5	22.0
T2 / 0X	55	0.56	0.69	0.72	0.74	0.75	0.39	0.44	0.47	0.59	0.62	0.91	0.93	0.95	0.96	0.96	0.84	0.88	1.0	1.0
T2 / 00		0.69	1.1	1.2	1.3	1.4	0.52	0.61	0.70	1.1	1.2	1.6	1.7	1.8	1.9	1.9	1.1	1.3	2.0	2.0
T2 / 01		0.95	1.7	1.9	2.1	2.3	0.74	0.89	1.1	2.0	2.4	2.8	3.1	3.4	3.7	4.0	1.6	1.9	3.7	4.0
T2 / 02		1.1	1.9	2.2	2.6	2.9	0.8	1.0	1.2	2.5	3.4	3.4	3.9	4.5	5.1	5.6	1.9	2.2	4.9	5.5
T2 / 03		1.8	3.3	3.8	4.3	4.9	1.4	1.7	2.1	4.3	5.8	5.8	6.7	7.7	8.7	9.6	3.2	3.7	8.5	9.5
T2 / 04		2.8	4.9	5.6	6.4	7.3	2.2	2.6	3.1	6.5	9.0	8.7	10.0	11.6	13.3	15.1	4.8	5.5	12.5	14.0
T2 / 05		3.6	6.4	7.3	8.4	9.6	2.8	3.4	4.1	8.6	11.9	11.4	13.3	15.4	17.8	20.0	6.3	7.2	17.3	19.6
T2 / 06		4.3	7.5	8.7	10.0	11.4	3.3	4.0	4.8	10.3	14.3	13.6	15.9	18.5	21.3	24.0	7.3	8.4	20.3	23.2

[3] Condensing temperature at bubble point.

Correction factor

Refrigerant	Subcooling [K]										
	2	4	10	15	20	25	30	35	40	45	50
R134a	0.98	1	1.08	1.13	1.19	1.25	1.31	1.37	1.42	1.48	1.54
R404A/R507	0.96	1	1.10	1.20	1.29	1.37	1.46	1.54	1.63	1.70	1.78
R407C	0.97	1	1.08	1.14	1.21	1.27	1.33	1.39	1.45	1.51	1.57
R22	0.98	1	1.06	1.11	1.15	1.20	1.25	1.30	1.35	1.39	1.44

When the subcooling ≠ 4 K then:
Plant capacity / Factor = Table value

Example:
Refrigerant = R407C
Q_{nom} = 10 kW
t_e = 0°C
t_c = 55°C
Δt_{sub} = 25 K

Selection:
10 kW / 1.27 = 7.9 kW → T2, Orifice 04

Thermostatic valve + Orifice

Notes

TE5-55 – Thermostatic expansion valves

Thermostatic expansion valves TE5-55 regulate the injection of refrigerant liquid into evaporators for medium sized plants (rated capacities from 8 kW to 182 kW for R404A/R507). Injection is controlled by the refrigerant superheat. Therefore the valves are especially suitable for liquid injection in "dry" evaporators where the superheat at the evaporator outlet should always be kept constant.

Features

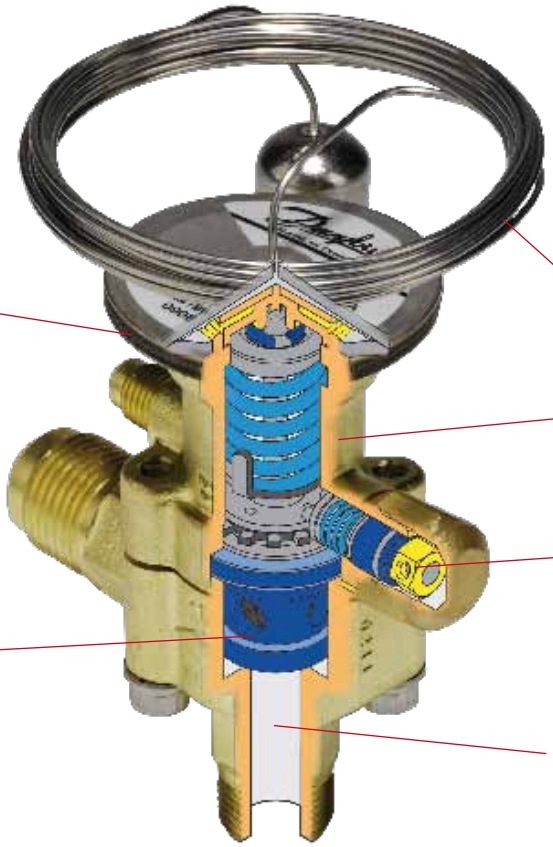

Laser-welded power element in stainless steel
- longer diaphragm life
- high pressure tolerance and working pressure
- high corrosion resistance

Stainless steel capillary tube and bulb
- high corrosion resistance
- high strength and vibration resistance

Large parts program ensures minimal stocks

Easy adjustment of superheat setting

To ensure long operating life, the valve cone and seat are made of a special alloy with particularly good wear qualities.

More connection possibilities
- solder × solder
- flare × flare
- flanges
- straightway or angleway

Applications	Advantages	Facts

· Traditional refrigeration
· Air conditioning units
· Ice cube machines
· Water chillers
	· Interchangeable orifice assembly designed for:
	  · Easy assembly and mounting
	  · Optimised capacity matching
	  · Balanced port (TE55 only)
	· Large temperature range –60 to +10°C
		· Available with MOP (Max. Operating Pressure). Protects the compressor motor against excessive evaporating pressure.
		· Refrigerants: R22, R134a, R404A/R507, R407C
		· Maximum Working Pressure: 28 bar

Technical data and ordering:

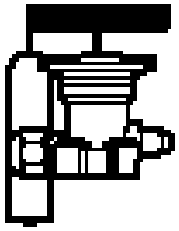

Thermostatic element - including bulb strap **R407C**

Valve type	Pressure equalization	Capillary tube	Code no.	
			Range N –40 to +10°C	
	1/4 in. / 6 mm	m	Without MOP	MOP+15°C
TEZ 5	Ext.	3	067B3278	067B3277
TEZ 12	Ext.	3	067B3366	067B3367
TEZ 20	Ext.	3	067B3371	067B3372
TEZ 55	Ext.	3	067G3240	067G3241

Thermostatic element - including bulb strap **R134a**

Valve type	Pressure equalization	Capillary tube	Code no.		
			Range N –40 to +10°C		Range NM –40 to –5°C
	1/4 in. / 6 mm	m	Without MOP	MOP +15°C	MOP 0°C
TEN 5	Ext.	3	067B3297	067B3298	067B3360
TEN 12	Ext.	3	067B3232	067B3233	-
TEN 12	Ext.	5	067B3363	-	-
TEN 20	Ext.	3	067B3292	067B3293	-
TEN 20	Ext.	5	067B3370	-	-
TEN 55	Ext.	3	067G3222	067G3223	-
TEN 55	Ext.	5	067G3230	-	-

Thermostatic element - including bulb strap **R404A/R507**

Valve type	Pressure equalization	Capillary tube	Code no.					
			Range N –40 to +10°C		Range NM –40 to –5°C	Range NL –40 to –15°C	Range B –60 to –25°C	
	1/4 in. / 6 mm	m	Without MOP	MOP +15°C	MOP 0°C	MOP –10°C	Without MOP	MOP –20°C
TES 5	Ext.	3	067B3342	-	067B3357	067B3358	067B3344	067B3343
TES 12	Ext.	3	067B3347	-	067B3345	067B3348	-	067B3349
TES 12	Ext.	5	067B3346	-	-	-	-	067B3350
TES 20	Ext.	3	067B3352	-	067B3351	067B3353	-	067B3354
TES 20	Ext.	5	067B3356	-	-	-	-	067B3355
TES 55	Ext.	3	067G3302	-	067G3303	067G3304	-	067G3305
TES 55	Ext.	5	067G3301	-	-	-	-	067G3306

Thermostatic element - including bulb strap **R22/R407C**

Valve type	Pressure equalization	Capillary tube	Code no.					
			Range N –40°C to +10°C		Range NM –40 to –5°C	Range NL –40 to –15°C	Range B –60 to –25°C	
	1/4 in. / 6 mm	m	Without MOP	MOP+15°C	MOP 0°C	MOP –10°C	Without MOP	MOP –20°C
TEX 5	Ext	3	067B3250	067B3267	067B3249	067B3253	067B3263	067B3251
TEX 12	Ext.	3	067B3210	067B3227	067B3207	067B3213	-	067B3211
TEX 12	Ext.	5	067B3209	-	-	-	-	067B3212
TEX 20	Ext.	3	067B3274	067B3286	067B3273	067B3275	-	067B3276
TEX 20	Ext.	5	067B3290	-	-	-	-	067B3287
TEX 55	Ext.	3	067G3205	067G3220	067G3206	-	-	067G3207
TEX 55	Ext.	5	067G3209	-	-	-	-	067G3217

Bulb strap (delivered with the element)

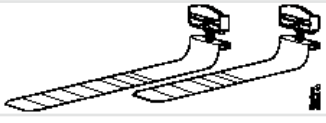

Type	Length	Max. diameter of suction line	Code no.
TE5 and TE12	225 mm	2 1/8 in. (54 mm)	067N0558
TE20 and TE55	350 mm	3 1/8 in. (78 mm)	067N0559

Technical data and ordering:

Orifice assembly

SI N	R134a		R404A/R507		R407C		R22		Orifice no.	Code no.
	kW	TR	kW	TR	kW	TR	kW	TR		
TE5 - 0.5	6.7	1.9	8.1	2.3	10.7	3.1	10.4	3.0	0.5	067B2788
TE5 - 1	12.2	3.5	14.8	4.2	19.6	5.6	19.0	5.4	1	067B2789
TE5 - 2	17.0	4.8	20.4	5.8	27.1	7.7	26.3	7.5	2	067B2790
TE5 - 3	21.8	6.2	26.2	7.5	34.7	9.9	33.8	9.6	3	067B2791
TE5 - 4	29.7	8.5	35.5	10.1	47.3	13.5	45.9	13.1	4	067B2792
TE12 - 5	37.7	10.7	50.0	14.3	56.0	16.0	57.0	16.2	5	067B2708
TE12 - 6	50.0	14.3	64.0	18.2	74.0	21.1	76.0	21.7	6	067B2709
TE12 - 7	66.0	18.8	81.0	23.1	94.0	26.8	98.0	27.9	7	067B2710
TE20 - 8	78.0	22.2	87.0	24.8	117.0	33.3	128.0	36.5	8	067B2771
TE20 - 9	92.0	26.2	101.0	28.8	136.0	38.7	150.0	42.7	9	067B2773
TE55 - 10	111.0	31.6	127.0	36.2	161.0	45.8	168.0	47.9	10	067G2701
TE55 - 11	122.0	34.8	138.0	39.3	175.0	49.9	183.0	52.1	11	067G2704
TE55 - 12	134.0	38.2	151.0	43.0	191.0	54.4	202.0	57.6	12	067G2707
TE55 - 13	166.0	47.3	182.0	51.9	231.0	65.8	245.0	69.8	13	067G2710

The rated capacity is based on:
Evaporating temperature t_e = +4.4 °C
Condensing temperature t_c = +38 °C
Refrigerant temperature ahead of valve t_l = +37 °C

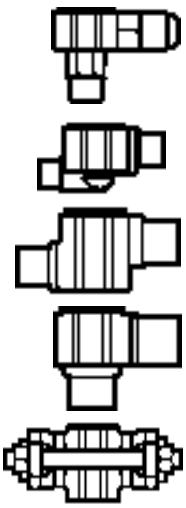

Valve body

Type	Connection Inlet × Outlet		Code no.			
	in.	mm	Flare angleway	Solder angleway	Solder straightway	Solder flanges
TE 5	1/2 × 5/8	-	067B4013	067B4009 [1)]	067B4007 [1)]	-
	1/2 × 7/8	-	-	067B4010 [1)]	067B4008 [1)]	-
	5/8 × 7/8	-	-	067B4011 [1)]	067B4032 [1)]	-
	7/8 × 1 1/8	-	-	067B4034 [2)]	067B4033 [2)]	-
TE 5	-	12 × 16	067B4013	067B4004 [1)]	067B4002 [1)]	-
	-	12 × 22	-	067B4005 [1)]	067B4003 [1)]	-
	-	16 × 22	-	067B4012 [1)]	067B4035 [1)]	-
	-	22 × 28	-	067B4037 [2)]	067B4036 [2)]	-
TE 12	5/8 × 7/8	-	-	-	-	067B4025 [1)]
	7/8 × 1	-	-	-	-	067B4026 [1)]
	7/8 × 1 1/8	-	-	067B4023 [2)]	067B4021 [2)]	-
TE 12	-	16 × 22	-	-	-	067B4027 [1)]
	-	22 × 25	-	-	-	067B4015 [1)]
	-	22 × 28	-	067B4017 [2)]	067B4016 [2)]	-
TE 20	7/8 × 1 1/8	-	-	067B4023 [2)]	067B4021 [2)]	-
	-	22 × 28	-	067B4017 [2)]	067B4016 [2)]	-
TE 55	1 1/8 × 1 3/8	-	-	067G4004 [3)]	067G4003 [3)]	-
	-	28 × 35	-	067G4002 [3)]	067G4001 [3)]	-

[1)] ODF × ODF
[2)] ODF × ODM
[3)] ODM × ODM
ODF = Internal diameter
ODM = External diameter

When the subcooling ≠ 4 K then:
Plant capacity / Factor = Table value

Example:
Refrigerant = R404A
Q_{nom} = 10 kW
t_e = -10°C
t_c = 45°C
Dt_{sub} = 25 K

Selection:
10 kW / 1.46 = 6.85 kW → TE5, Orifice 01

Thermostatic element + Orifice + Valve body

Capacities

Capacity in kW, range N -40 °C to +10 °C. Opening superheat sh= 4.4 K

Valve type/ Orifice	Cond. temp.[3] [°C]	R134a					R404A/R507					R407C					R22			
		Capacity in [kW]					Capacity in [kW]					Capacity in [kW]					Capacity in [kW]			
		Evaporating temp. [°C]					Evaporating temp. [°C]					Evaporating temp. [°C]					Evaporating temp. [°C]			
		-30	-10	-5	0	5	-40	-35	-30	-10	0	-10	-5	0	5	10	-35	-30	0	5
TE5 - 0.5	25	3.3	5.0	5.4	5.7	5.8	3.7	4.2	4.8	6.9	7.5	8.6	9.2	9.7	10.0	10.0	5.1	5.7	8.9	8.9
TE5 - 1	25	6.1	9.2	9.8	10.3	10.6	6.8	7.7	8.8	12.7	13.7	15.7	16.8	17.6	18.2	18.2	9.4	10.5	16.2	16.2
TE5 - 2	25	8.6	12.8	13.7	14.4	14.6	9.5	10.9	12.3	17.6	18.8	21.8	23.3	24.4	25.0	24.9	13.2	14.8	22.3	22.2
TE5 - 3	25	11.0	16.5	17.7	18.6	19.0	12.0	13.8	15.6	22.6	24.4	28.1	30.0	31.6	32.4	32.4	16.8	18.8	28.9	28.8
TE5 - 4	25	14.9	22.5	24.2	25.4	25.9	16.1	18.5	21.1	30.8	33.1	38.2	40.9	42.9	44.0	43.7	22.6	25.5	39.3	38.9
TE12 - 5	25	19.3	29.0	31.2	33.0	33.9	20.7	24.2	27.9	43.9	48.9	45.1	49.2	53.0	55.0	56.0	27.7	31.2	51.0	51.0
TE12 - 6	25	25.2	38.4	41.4	43.9	45.2	24.9	29.3	34.1	55.0	62.0	59.0	65.0	70.0	73.0	75.0	35.8	40.5	67.0	68.0
TE12 - 7	25	33.8	52.0	56.0	59.0	61.0	32.5	37.9	43.9	72.0	81.0	78.0	86.0	93.0	98.0	100.0	46.9	53.0	90.0	91.0
TE20 - 8	25	39.1	60.0	64.0	68.0	69.0	35.7	41.8	48.4	75.0	83.0	96.0	104.0	110.0	113.0	1130	62.0	71.0	113.0	112.0
TE20 - 9	25	45.4	72.0	78.0	82.0	85.0	39.5	46.5	54.0	88.0	100.0	112.0	123.0	131.0	137.0	137.0	69.0	80.0	136.0	135.0
TE55 - 10	25	53.0	84.0	92.0	98.0	102.0	46.5	55.0	65.0	108.0	124.0	130.0	142.0	153.0	162.0	166.0	75.0	86.0	150.0	153.0
TE55 - 11	25	59.0	93.0	102.0	109.0	113.0	51.0	61.0	71.0	118.0	136.0	143.0	156.0	168.0	177.0	181.0	83.0	95.0	165.0	167.0
TE55 - 12	25	64.0	103.0	113.0	121.0	126.0	55.0	65.0	77.0	130.0	151.0	156.0	172.0	186.0	197.0	202.0	90.0	103.0	183.0	187.0
TE55 - 13	25	80.0	130.0	142.0	152.0	157.0	67.0	79.0	94.0	159.0	183.0	192.0	211.0	228.0	241.0	246.0	111.0	127.0	225.0	228.0
TE5 - 0.5	35	3.4	5.3	5.9	6.4	6.8	3.5	4.0	4.6	7.1	8.1	8.8	9.6	10.4	11	11.4	5.27	5.93	10.0	10.4
TE5 - 1	35	6.29	9.85	10.8	11.6	12.4	6.3	7.3	8.37	12.9	14.8	16.2	17.7	19.0	20.1	20.9	9.69	10.9	18.4	19.1
TE5 - 2	35	8.83	13.8	15.0	16.2	17.1	8.9	10.3	11.8	18.0	20.4	22.6	24.6	26.4	27.8	28.7	13.6	15.3	25.4	26.2
TE5 - 3	35	11.3	17.6	19.3	20.8	22.1	11.1	12.9	14.8	22.9	26.3	28.8	31.4	33.8	35.7	370	17.1	19.3	32.7	33.9
TE5 - 4	35	15.2	24.0	26.3	28.4	30.1	14.9	17.3	19.9	31.2	35.7	39.1	42.7	46.0	48.6	50.0	22.9	25.9	44.5	45.9
TE12 - 5	35	19.5	30.3	33.3	36.1	38.5	18.6	21.8	25.3	42.3	51.0	44.2	49.2	54.0	58.0	62.0	27.7	31.2	55.0	58.0
TE12 - 6	35	25.1	39.8	43.9	47.8	51.0	22.3	26.3	30.7	53.0	64.0	58.0	64.0	71.0	77.0	82.0	35.4	40.1	74.0	77.0
TE12 - 7	35	33.3	52.0	58.0	63.0	68.0	27.8	32.6	37.9	66.0	81.0	73.0	82.0	92.0	100.0	107.0	45.5	51.0	95.0	101.0
TE20 - 8	35	39.2	62.0	69.0	74.0	79.0	32.4	38.0	44.3	74.0	87.0	96.0	105.0	114.0	122.0	127.0	62.0	70.0	125.0	129.0
TE20 - 9	35	44.4	73.0	81.0	88.0	95.0	34.9	41.1	48.2	84.0	101.0	108.0	120.0	132.0	143.0	151.0	67.0	76.0	146.0	153.0
TE55 - 10	35	51.0	85.0	95.0	105.0	114.0	40.6	48.7	58.0	103.0	126.0	126.0	141.0	155.0	169.0	180.0	72.0	83.0	162.0	172.0
TE55 - 11	35	56.0	94.0	105.0	116.0	126.0	44.2	53.0	63.0	112.0	137.0	138.0	153.0	169.0	184.0	196.0	79.0	91.0	177.0	187.0
TE55 - 12	35	61.0	103.0	116.0	128.0	139.0	47.1	57.0	67.0	121.0	150.0	149.0	167.0	185.0	202.0	216.0	85.0	98.0	194.0	207.0
TE55 - 13	35	75.0	128.0	144.0	159.0	172.0	56.0	68.0	80.0	146.0	181.0	181.0	203.0	225.0	245.0	262.0	103.0	119.0	237.0	251.0
TE5 - 0.5	45	3.4	5.5	6.1	6.7	7.3	3.1	3.6	4.1	6.8	8.0	8.7	9.5	10.4	11.3	12	5.32	5.98	10.6	11.3
TE5 - 1	45	6.3	10.1	11.2	12.3	13.4	5.65	6.6	7.6	12.3	14.7	15.9	17.6	19.2	20.7	22.1	9.76	11.0	19.5	20.7
TE5 - 2	45	8.8	14.1	15.7	17.2	18.6	7.94	9.3	10.7	17.2	20.4	22.4	24.6	26.8	28.9	30.5	13.7	15.4	27.2	28.7
TE5 - 3	45	11.2	17.9	19.9	21.9	23.7	9.85	11.5	13.2	21.6	25.9	28.0	30.9	33.9	36.6	38.9	17.1	19.3	34.5	36.6
TE5 - 4	45	14.9	24.3	27.1	29.8	32.4	13.0	15.3	17.7	29.4	35.4	38.0	42.2	46.3	50.0	53.0	22.7	25.7	47.1	49.9
TE12 - 5	45	19.0	30.0	33.3	36.7	40.1	16.1	18.8	21.9	37.8	47.4	40.9	46.0	51.0	57.0	61.0	27.1	30.3	56.0	60.0
TE12 - 6	45	24.3	39.1	43.7	48.5	53.0	19.0	22.5	26.4	46.9	60.0	53.0	60.0	67.0	75.0	82.0	34.2	38.6	74.0	80.0
TE12 - 7	45	31.7	50.0	56.0	62.0	68.0	23.1	27.0	31.3	56.0	72.0	65.0	73.0	83.0	92.0	102.0	43.3	48.3	92.0	100.0
TE20 - 8	45	38.0	62.0	69.0	76.0	83.0	28.0	32.9	38.4	67.0	83.0	90.0	100.0	111.0	121.0	130.0	60.0	68.0	127.0	136.0
TE20 - 9	45	42.1	70.0	79.0	88.0	97.0	29.5	34.8	40.7	73.0	93.0	97.0	110.0	123.0	137.0	149.0	63.0	71.0	144.0	156.0
TE55 - 10	45	47.4	83.0	94.0	105.0	117.0	33.4	40.5	48.5	91.0	117.0	116.0	131.0	147.0	164.0	179.0	67.0	78.0	163.0	177.0
TE55 - 11	45	52.0	91.0	103.0	115.0	128.0	36.2	43.9	52.0	98.0	126.0	126.0	142.0	160.0	177.0	194.0	74.0	85.0	176.0	192.0
TE55 - 12	45	56.0	98.0	111.0	126.0	140.0	38.2	46.4	56.0	105.0	136.0	135.0	153.0	172.0	192.0	211.0	78.0	90.0	191.0	209.0
TE55 - 13	45	68.0	120.0	137.0	154.0	171.0	44.6	54.0	65.0	125.0	162.0	161.0	183.0	207.0	231.0	253.0	93.0	108.0	231.0	252.0
TE5 - 0.5	55	3.3	5.4	6.1	6.7	7.4	2.6	3.0	3.5	5.8	7.2	8.1	9.0	9.9	10.8	11.7	5.3	5.9	10.7	11.6
TE5 - 1	55	6.1	10.0	11.1	12.4	13.6	4.8	5.6	6.4	10.8	13.3	14.9	16.6	18.3	20.0	21.7	9.7	10.9	19.8	21.3
TE5 - 2	55	8.5	14.0	15.6	17.3	19.0	6.7	7.9	9.1	15.2	18.6	21.1	23.4	25.8	28.1	30.3	13.5	15.3	27.8	29.7
TE5 - 3	55	10.8	17.5	19.6	21.8	24.0	8.2	9.6	11.1	18.7	23.2	25.9	28.8	31.9	35.0	37.9	16.8	18.9	34.6	37.2
TE5 - 4	55	14.3	23.7	26.6	29.6	32.7	10.8	12.7	14.8	25.5	31.9	35.1	39.4	43.8	48.2	52.0	22.1	25.0	47.5	51.0
TE12 - 5	55	18.0	28.3	31.7	35.2	39.0	13.3	15.5	18.0	31.1	39.9	36.0	40.6	45.6	51.0	56.0	26.1	29.0	53.0	58.0
TE12 - 6	55	22.8	36.8	41.4	46.4	52.0	15.5	18.3	21.4	38.4	50.0	46.4	53.0	60.0	67.0	75.0	32.6	36.5	71.0	78.0
TE12 - 7	55	29.4	45.8	51.0	57.0	64.0	18.6	21.6	24.9	43.4	57.0	55.0	62.0	70.0	79.0	88.0	40.8	45.0	84.0	92.0
TE20 - 8	55	35.9	58.0	66.0	73.0	81.0	23.1	27.1	31.5	55.0	71.0	80.0	90.0	100.0	112.0	122.0	57.0	64.0	123.0	134.0
TE20 - 9	55	38.9	64.0	73.0	82.0	92.0	23.8	27.9	32.6	59.0	77.0	84.0	95.0	108.0	121.0	135.0	58.0	66.0	134.0	148.0
TE55 - 10	55	42.6	76.0	87.0	99.0	112.0	25.7	31.5	38.1	74.0	98.0	101.0	116.0	132.0	148.0	165.0	61.0	71.0	155.0	171.0
TE55 - 11	55	46.5	83.0	95.0	108.0	122.0	27.7	33.9	40.9	79.0	105.0	109.0	125.0	142.0	159.0	178.0	66.0	77.0	167.0	184.0
TE55 - 12	55	49.4	89.0	102.0	117.0	132.0	28.9	35.5	42.9	84.0	112.0	116.0	132.0	151.0	170.0	191.0	70.0	81.0	179.0	199.0
TE55 - 13	55	59.0	107.0	123.0	141.0	160.0	33.1	40.9	49.6	98.0	131.0	136.0	156.0	178.0	202.0	227.0	81.0	95.0	213.0	237.0

[3] Condensing temperature at bubble point.

Subcooling correction factor 'f_{sub}'

'f_{sub}' = saturated condensing temp. - liquid temp. at valve inlet

Refrigerant	Subcooling [K]										
	2	4	10	15	20	25	30	35	40	45	50
R134a	0.97	1.00	1.09	1.16	1.23	1.30	1.37	1.44	1.51	1.58	1.65
R404A/R507	0.97	1.00	1.10	1.19	1.27	1.35	1.43	1.52	1.60	1.68	1.76
R407C	0.97	1.00	1.08	1.15	1.22	1.29	1.36	1.43	1.50	1.57	1.64
R22	0.98	1.00	1.07	1.13	1.19	1.25	1.30	1.36	1.42	1.47	1.53

TUA/TUAE/TCAE – Thermostatic expansion valves

Thermostatic expansion valves regulate the injection of liquid refrigerant into evaporators. Injection is controlled by the refrigerant superheat. Therefore the valves are especially suitable for liquid injection in "dry" evaporators where the superheat at the evaporator outlet should always be kept constant.

Features

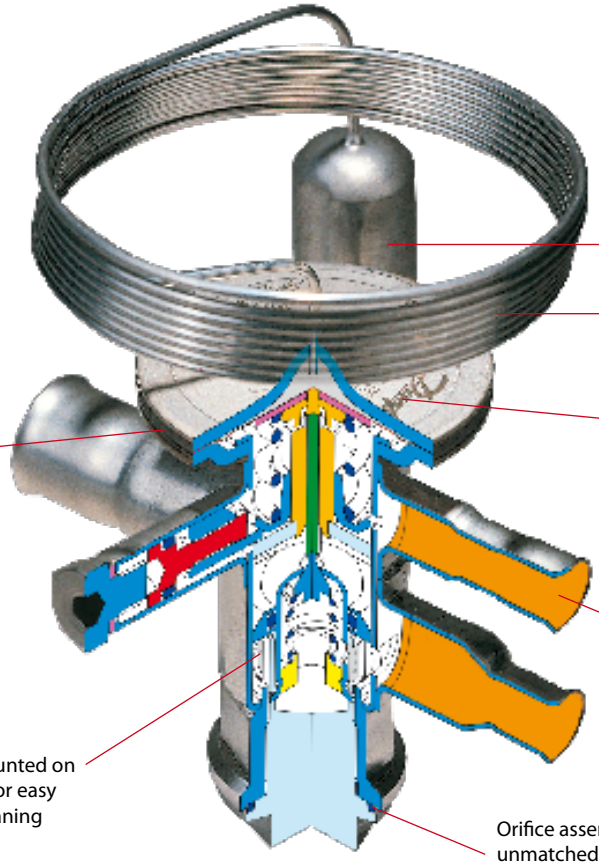

Applications	Advantages	Facts
· Traditional refrigeration · Heat pump systems · Air conditioning units · Liquid coolers · Ice cube machines · Transport refrigeration	· The use of stainless steel makes the valves light and strong. · Bi-metal connections for safe, fast and convenient soldering. · Stainless steel capillary tube for superior strength and ductility. · Allen key superheat setting screw is convenient and space-saving compared to the standard screwdriver adjustment used in most conventional valves.	· Can be supplied with MOP (Max. Operating Pressure) Protects the compressor motor against excessive evaporating pressure during normal operation. · Valves for special temperature ranges can be supplied. · Only 4 K opening superheat. · Bi-flow function.

Technical data and ordering: TUA/TUAE

Thermostatic element, without orifice or strainer, with bulb strap [1]

Refrigerant	Type	Pressure equalization	Connections Inlet × outlet		Code no.				
					Range N −40 to +10°C		Range NM −40 to −5°C	Range B −60 to −25°C	
			in.	mm	Without MOP	MOP +15°C	MOP 0°C	Without MOP	MOP −20°C
R22/R407C	TUA	Int.	1/4 × 1/2		068U2234	-	-	-	-
	TUA	Int.		6 × 12	068U2230	-	-	-	-
	TUA	Int.	3/8 × 1/2		068U2235	-	-	-	-
	TUA	Int.		10 × 12	068U2231	-	-	-	-
	TUAE	Ext. 1/4 in.	1/4 × 1/2		068U2236	-	-	-	-
	TUAE	Ext. 6 mm		6 × 12	-	-	-	-	-
	TUAE	Ext. 1/4 in.	3/8 × 1/2		068U2237	068U2245	-	-	-
	TUAE	Ext. 6 mm		10 × 12	068U2233	068U2241	-	-	-
R134a	TUA	Int.	1/4 × 1/2		068U2204	068U2212	-	-	-
	TUA	Int.		6 × 12	068U2200	068U2208	-	-	-
	TUA	Int.	3/8 × 1/2		068U2205	068U2213	-	-	-
	TUA	Int.		10 × 12	068U2201	-	-	-	-
	TUAE	Ext. 1/4 in.	1/4 × 1/2		068U2206	068U2214	-	-	-
	TUAE	Ext. 6 mm		6 × 12	068U2202	-	-	-	-
	TUAE	Ext. 1/4 in.	3/8 × 1/2		068U2207	068U2215	-	-	-
	TUAE	Ext. 6 mm		10 × 12	068U2203	068U2211	-	-	-
R404A/R507	TUA	Int.	1/4 × 1/2		068U2284	068U2292	068U2300	068U2308	068U2316
	TUA	Int.		6 × 12	068U2280	-	068U2296	-	068U2312
	TUA	Int.	3/8 × 1/2		068U2285	068U2293	-	068U2309	068U2317
	TUA	Int.		10 × 12	068U2281	-	-	-	-
	TUAE	Ext. 1/4 in.	1/4 × 1/2		068U2286	-	-	-	068U2318
	TUAE	Ext. 6 mm		6 × 12	068U2282	-	-	-	-
	TUAE	Ext. 1/4 in.	3/8 × 1/2		068U2287	068U2295	068U2303	-	068U2319
	TUAE	Ext. 6 mm		10 × 12	068U2283	-	068U2299	-	068U2315
R407C	TUA	Int.	1/4 × 1/2		068U2324	068U2332	-	-	-
	TUA	Int.		6 × 12	068U2320	-	-	-	-
	TUA	Int.	3/8 × 1/2		068U2325	068U2333	-	-	-
	TUA	Int.		10 × 12	068U2321	-	-	-	-
	TUAE	Ext. 1/4 in.	1/4 × 1/2		068U2326	-	-	-	-
	TUAE	Ext. 6 mm		6 × 12	068U2322	068U2330	-	-	-
	TUAE	Ext. 1/4 in.	3/8 × 1/2		068U2327	068U2335	-	-	-
	TUAE	Ext. 6 mm		10 × 12	068U2323	068U2331	-	-	-
R410A	TUA	Int.	3/8 × 1/2		068U2414	-	-	-	-
	TUAE	Ext. 1/4 in.	3/8 × 1/2		068U1714	-	-	-	-
	TUAE	Ext. 6 mm		10 × 12	068U2780	-	-	-	-

Orifice assembly with filter and gasket

Valve type/ Orifice	R134a		R404A/R507		R407C		R22		R410A		Code no.
	kW	TR	kW	TR	kW	TR	kW	TR	kW	TR	
TU Orif. 0	0.42	0.12	0.48	0.14	0.66	0.19	0.63	0.18	0.99	0.28	068U1030
TU Orif. 1	0.61	0.18	0.71	0.20	0.94	0.27	0.92	0.26	1.3	0.38	068U1031
TU Orif. 2	0.72	0.21	0.87	0.25	1.1	0.32	1.1	0.32	1.7	0.48	068U1032
TU Orif. 3	0.94	0.27	1.1	0.32	1.5	0.42	1.4	0.41	2.1	0.60	068U1033
TU Orif. 4	1.6	0.46	2.0	0.57	2.5	0.72	2.5	0.72	4.1	1.2	068U1034
TU Orif. 5	2.1	0.61	2.7	0.76	3.4	0.96	3.4	0.96	5.3	1.5	068U1035
TU Orif. 6	3.4	0.95	4.2	1.1	5.3	1.5	5.3	1.5	8.5	2.4	068U1036
TU Orif. 7	4.4	1.3	5.6	1.6	7.0	2.0	7.0	2.0	11.2	3.2	068U1037
TU Orif. 8	6.5	1.9	8.0	2.3	10.2	2.9	10.1	2.9	15.8	4.5	068U1038
TU Orif. 9*)	9.0	2.6	11.3	3.2	14.0	4.0	14.1	4.0	23.1	6.6	068U1039

[1] Capillary tube length 1.5 m.
[2] The rated capacity is based on: Evaporating temperature t_e = +4.4 °C for range N, condensing temperature t_c = +38 °C, refrigerant temperature ahead of valve t_l = +37 °C, and opening superheat OS = 4 K.
[3] For R407C plants, please select valves from the dedicated R407C program
*) TUAE with orifice no. 9 cannot be used for Biflow operation

Bulb strap (delivered with the valve) and Accessories

Type	Length	Max. diameter of suction line	Code no.
TUA / TUAE Accessories	110 mm	1 1/8" (28 mm)	068U3507
	190 mm	2" (50 mm)	067N3508

Technical data and ordering: TCAE

Thermostatic element, without orifice or strainer, with bulb strap [3]

Refrigerant	Type	Pressure equalization	Connection Inlet × outlet		Code no.				
					Range N −40 to +10°C		Range NM −40 to −5°C	Range B −60 to −25°C	
			in.	mm	Without MOP	With MOP	MOP 0°C	Without MOP	With MOP
R22/R407C	TCAE	1/4 in.	3/8 × 5/8	-	068U4280	-	-	-	-
	TCAE	1/4 in.	1/2 × 5/8	-	068U4281	068U4283	-	-	-
	TCAE	6 mm	-	10 × 16	-	-	-	-	-
	TCAE	6 mm	-	12 × 16	-	-	068U4291	-	-
R134a	TCAE	1/4 in.	3/8 × 5/8	-	068U4292	-	-	-	-
	TCAE	1/4 in.	1/2 × 5/8	-	068U4293	068U4295	-	-	-
	TCAE	6 mm	-	10 × 16	068U4296	-	-	-	-
	TCAE	6 mm	-	12 × 16	068U4297	068U4299	-	-	-
R404A/R507	TCAE	1/4 in.	3/8 × 5/8	-	068U4304	-	-	-	-
	TCAE	1/4 in.	1/2 × 5/8	-	068U4305	068U4307	068U4313	068U4317	068U4319
	TCAE	6 mm	-	10 × 16	068U4308	068U4310	068U4314	-	068U4322
	TCAE	6 mm	-	12 × 16	068U4309	-	068U4315	068U4321	068U4323
R407C	TCAE	1/4 in..	3/8 × 5/8	-	068U4324	068U4326	-	-	-
	TCAE	1/4 in.	1/2 × 5/8	-	068U4325	068U4327	-	-	-
	TCAE	6 mm	-	10 × 16	068U4328	-	-	-	-
	TCAE	6 mm	-	12 × 16	068U4329	068U4331	-	-	-
R410A	TCAE	1/4 in.	3/8 × 5/8	-	068U4336	-	-	-	-
	TCAE	1/4 in.	1/2 × 5/8	-	068U4337	068U4339	-	-	-
	TCAE	6 mm	-	10 × 16	-	-	-	-	-
	TCAE	6 mm	-	12 × 16	068U4341	068U4343	-	-	-

Orifice assembly with filter and gasket

SI N	R134a		R404A/R507		R407C		R22		R410A		Code no.	
	kW	TR	kW	TR	kW	TR	kW	TR	kW	TR	Without bleed	With 15% bleed
TC Orif. 1	13.0	3.7	13.0	3.7	17.8	5.1	18.3	5.2	21.2	6.0	068U4100	068U4097
TC Orif. 2	14.9	4.3	15.1	4.3	20.4	5.8	21.2	6.0	24.5	7.0	068U4101	068U4098
TC Orif. 3	18.6	5.3	18.9	5.4	25.2	7.2	26.7	7.6	30.6	8.7	068U4102	068U4099

[3] Capillary tube length 1.5 m.
[4] The rated capacity is based on: Evaporating temperature t_e = +4.4 °C, condensing temperature t_c = +38 °C, refrigerant temperature ahead of valve t_l = +37 °C, and opening superheat OS = 4 K.
[5] TCAE with orifice no. 3 cannot be used for biflow operation.
[6] For R407C plants, please select valves from the dedicated R407C program

Bulb strap (delivered with the valve) and Accessories

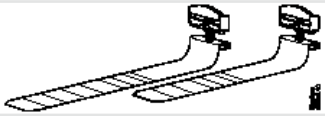

Type	Length	Max. diameter of suction line	Code no.
TCAE Accessories	110 mm	1 1/8" (28 mm)	068U3507
	190 mm	2" (50 mm)	067N3508

Capacities

Capacity in kW, range N -40 °C to +10 °C. Opening superheat sh= 4.4 K

Valve type/ Orifice	Cond. temp.[3] [°C]	R134a					R404A/R507					R407C					R22				R410A				
		Capacity in [kW]					Capacity in [kW]					Capacity in [kW]					Capacity in [kW]				Capacity in [kW]				
		Evaporating temp. [°C]					Evaporating temp. [°C]					Evaporating temp. [°C]					Evaporating temp. [°C]				Evaporating temp. [°C]				
		-30	-10	-5	0	5	-40	-35	-30	-10	0	-10	-5	0	5	10	-35	-30	0	5	-10	-5	0	5	10
TU Orif. 0	25	0.18	0.29	0.32	0.35	0.36	0.17	0.20	0.24	0.39	0.44	0.49	0.54	0.58	0.60	0.62	0.27	0.30	0.53	0.54	0.81	0.86	0.87	0.86	0.80
TU Orif. 1	25	0.26	0.43	0.47	0.51	0.51	0.26	0.30	0.35	0.57	0.64	0.71	0.78	0.83	0.87	0.88	0.39	0.45	0.77	0.78	1.1	1.2	1.1	1.2	1.1
TU Orif. 2	25	0.29	0.49	0.54	0.59	0.62	0.28	0.33	0.39	0.66	0.77	0.82	0.91	0.98	1.0	1.1	0.43	0.50	0.91	0.94	1.3	1.4	1.5	1.5	1.4
TU Orif. 3	25	0.40	0.66	0.72	0.78	0.82	0.39	0.45	0.53	0.87	1.0	1.1	1.2	1.1	1.3	1.4	0.59	0.68	1.2	1.2	1.7	1.8	1.9	1.9	1.8
TU Orif. 4	25	0.62	1.1	1.2	1.3	1.4	0.61	0.72	0.84	1.5	1.8	1.8	2.0	2.2	2.4	2.5	0.93	1.1	2.1	2.3	2.9	3.2	3.4	3.6	3.5
TU Orif. 5	25	0.84	1.4	1.6	1.7	1.9	0.81	0.96	1.1	2.0	2.4	2.4	2.7	2.9	3.2	3.3	1.3	1.4	2.8	2.9	3.9	4.3	4.6	4.7	4.6
TU Orif. 6	25	1.3	2.2	2.5	2.7	2.9	1.3	1.5	1.8	3.1	3.7	3.8	4.2	4.6	5.0	5.2	1.9	2.2	4.3	4.5	6.1	6.7	7.2	7.5	7.4
TU Orif. 7	25	1.7	2.9	3.3	3.6	3.9	1.7	2.0	2.3	4.1	4.9	5.0	5.5	6.1	6.6	6.9	2.6	3.0	5.7	6.0	8.1	8.9	9.5	9.8	9.6
TU Orif. 8	25	2.6	4.7	4.9	5.3	5.7	2.5	2.9	3.4	6.0	7.1	7.4	8.2	8.9	9.5	9.9	3.8	4.4	8.3	8.7	11.8	12.8	13.6	13.9	13.3
TU Orif. 9	25	3.6	6.0	6.7	7.4	7.9	3.3	3.9	4.6	8.2	10.0	10.0	11.1	12.3	13.4	14.2	5.1	5.8	11.6	12.3	16.3	18.1	19.6	20.5	20.1
TC Orif. 1	25	7.5	10.4	10.9	11.2	11.2	6.3	7.2	8.1	11.4	12.0	14.7	15.5	16.1	16.3	16.1	10.2	11.4	15.7	15.4	18.4	19.0	19.1	18.7	17.5
TC Orif. 2	25	8.2	11.7	12.3	12.8	12.8	6.8	7.8	8.9	13.0	13.9	16.6	17.6	18.4	18.8	18.6	11.2	12.5	18.1	17.8	20.8	21.7	22.0	21.7	20.4
TC Orif. 3	25	9.6	14.3	15.2	15.9	16.1	7.8	9.1	10.5	16.0	17.5	20.2	21.7	22.9	23.6	23.6	13.0	14.7	22.8	22.6	25.5	26.9	27.6	27.4	26.0
TU Orif. 0	35	0.18	0.32	0.35	0.39	0.42	0.16	0.19	0.23	0.40	0.48	0.52	0.57	0.63	0.67	0.71	0.28	0.32	0.60	0.63	0.86	0.93	0.98	1.0	1.0
TU Orif. 1	35	0.27	0.46	0.52	0.57	0.62	0.24	0.29	0.34	0.58	0.70	0.74	0.82	0.90	0.96	1.0	0.40	0.46	0.88	0.93	1.1	1.2	1.3	1.4	1.4
TU Orif. 2	35	0.30	0.53	0.60	0.66	0.73	0.27	0.32	0.38	0.68	0.84	0.85	0.96	1.1	1.2	1.2	0.45	0.52	1.0	1.1	1.4	1.5	1.6	1.7	1.8
TU Orif. 3	35	0.41	0.71	0.79	0.88	0.96	0.36	0.43	0.51	0.90	1.1	1.1	1.3	1.4	1.5	1.6	0.61	0.70	1.4	1.4	1.8	1.9	2.1	2.2	2.2
TU Orif. 4	35	0.65	1.2	1.3	1.5	1.6	0.57	0.68	0.81	1.5	1.9	1.9	2.1	2.4	2.6	2.9	0.97	1.1	2.3	2.5	3.1	3.5	3.8	4.2	4.3
TU Orif. 5	35	0.87	1.5	1.8	2.0	2.2	0.77	0.92	1.1	2.0	2.6	2.5	2.8	3.2	3.5	3.8	1.3	1.5	3.1	3.4	4.1	4.6	5.1	5.5	5.7
TU Orif. 6	35	1.4	2.4	2.7	3.1	3.4	1.2	1.4	1.7	3.1	4.0	3.9	4.4	4.9	5.5	6.0	2.0	2.3	4.9	5.3	6.4	7.3	8.1	8.8	9.2
TU Orif. 7	35	1.8	3.2	3.6	4.1	4.5	1.6	1.9	2.2	4.2	5.3	5.2	5.8	6.5	7.2	7.9	2.7	3.1	6.5	7.0	8.5	9.6	10.6	11.5	11.9
TU Orif. 8	35	2.7	4.7	5.3	6.0	6.6	2.3	2.8	3.3	6.1	7.7	7.6	8.6	9.6	10.5	11.4	4.0	4.6	9.4	10.2	12.4	13.8	15.2	16.2	16.6
TU Orif. 9	35	3.7	6.4	7.3	8.2	9.2	3.1	3.7	4.4	8.3	10.7	10.2	11.6	13.1	14.6	16.1	5.3	6.1	13.0	14.3	16.9	19.3	21.7	23.8	25.1
TC Orif. 1	35	7.7	11.2	12.0	12.6	13.1	5.9	6.8	7.8	11.7	13.2	15.4	16.5	17.4	18.2	18.6	10.6	11.8	18.0	18.2	19.4	20.4	21.2	21.6	21.5
TC Orif. 2	35	8.4	12.6	13.6	14.4	15.1	6.3	7.4	8.5	13.3	15.2	17.2	18.6	19.9	20.9	21.5	11.5	12.9	20.7	21.2	21.8	23.3	24.4	25.0	25.0
TC Orif. 3	35	9.8	15.2	16.6	17.8	18.8	7.2	8.5	9.8	16.1	18.9	20.6	22.6	24.4	26.0	27.0	13.2	15.0	25.9	26.7	26.4	28.5	30.2	31.4	31.7
TU Orif. 0	45	0.18	0.33	0.37	0.41	0.46	0.15	0.18	0.21	0.38	0.47	0.52	0.58	0.64	0.70	0.76	0.28	0.32	0.64	0.69	0.86	0.94	1.0	1.1	1.1
TU Orif. 1	45	0.27	0.48	0.54	0.61	0.67	0.22	0.26	0.31	0.56	0.70	0.74	0.82	0.91	1.0	1.1	0.41	0.47	0.94	1.0	1.1	1.3	1.4	1.4	1.5
TU Orif. 2	45	0.30	0.54	0.62	0.70	0.79	0.24	0.29	0.34	0.65	0.84	0.85	0.96	1.1	1.2	1.3	0.46	0.53	1.1	1.2	1.4	1.5	1.7	1.8	1.9
TU Orif. 3	45	0.41	0.73	0.83	0.93	1.0	0.33	0.39	0.46	0.86	1.1	1.1	1.3	1.4	1.6	1.7	0.62	0.72	1.5	1.6	1.8	2.0	2.1	2.3	2.4
TU Orif. 4	45	0.65	1.2	1.4	1.6	1.8	0.52	0.62	0.74	1.4	1.9	1.9	2.1	2.4	2.7	3.0	0.99	1.1	2.5	2.8	3.1	3.5	4.0	4.4	4.7
TU Orif. 5	45	0.87	1.6	1.8	2.1	2.4	0.69	0.83	1.0	1.9	2.5	2.5	2.8	3.2	3.6	4.0	1.3	1.5	3.3	3.7	4.1	4.7	5.3	5.8	6.2
TU Orif. 6	45	1.4	2.5	2.8	3.2	3.7	1.1	1.3	1.5	3.0	4.0	3.9	4.4	5.0	5.6	6.3	2.1	2.4	5.2	5.8	6.4	7.3	8.3	9.2	10.0
TU Orif. 7	45	1.8	3.3	3.8	4.3	4.9	1.4	1.7	2.0	3.9	5.2	5.1	5.8	6.6	7.4	8.3	2.7	3.2	6.9	7.6	8.4	9.7	10.9	12.1	13.0
TU Orif. 8	45	2.7	4.8	5.5	6.3	7.1	2.1	2.5	3.0	5.8	7.6	7.5	8.5	9.7	10.8	12.0	4.0	4.6	10.0	11.1	12.3	13.9	15.6	17.1	18.2
TU Orif. 9	45	3.8	6.6	7.6	8.7	9.8	2.8	3.4	4.0	7.8	10.4	10.0	11.5	13.1	14.8	16.6	5.5	6.3	13.7	15.3	16.6	19.1	21.9	24.8	27.2
TC Orif. 1	45	7.7	11.6	12.6	13.5	14.3	5.3	6.2	7.1	11.3	13.2	15.4	16.7	17.9	19.0	19.9	10.7	12.0	19.4	20.1	19.3	20.6	21.8	22.7	23.2
TC Orif. 2	45	8.3	13.0	14.2	15.4	16.4	5.6	6.6	7.7	12.7	15.1	17.1	18.7	20.3	21.8	22.9	11.5	13.0	22.2	23.2	21.6	23.3	24.9	26.2	27.0
TC Orif. 3	45	9.6	15.4	17.1	18.7	20.2	6.3	7.5	8.8	15.1	18.6	20.1	22.4	24.6	26.7	28.5	13.1	14.9	27.4	29.0	25.6	28.1	30.4	32.5	34.0
TU Orif. 0	55	0.18	0.32	0.37	0.42	0.47	0.12	0.15	0.18	0.34	0.43	0.50	0.56	0.63	0.69	0.76	0.28	0.32	0.66	0.72	0.81	0.89	0.97	1.0	1.1
TU Orif. 1	55	0.27	0.48	0.54	0.62	0.69	0.18	0.22	0.26	0.49	0.63	0.70	0.79	0.88	0.98	1.1	0.41	0.47	0.96	1.1	1.1	1.2	1.3	1.4	1.5
TU Orif. 2	55	0.30	0.54	0.62	0.71	0.81	0.20	0.25	0.29	0.57	0.76	0.81	0.92	1.1	1.2	1.3	0.46	0.53	1.1	1.3	1.3	1.5	1.6	1.8	1.9
TU Orif. 3	55	0.40	0.72	0.83	0.95	1.1	0.28	0.33	0.40	0.76	0.98	1.1	1.2	1.4	1.5	1.7	0.60	0.71	1.5	1.6	1.7	1.9	2.0	2.2	2.3
TU Orif. 4	55	0.64	1.2	1.4	1.6	1.8	0.44	0.53	0.66	1.3	1.7	1.8	2.0	2.3	2.6	3.0	0.99	1.1	2.6	2.9	2.9	3.3	3.8	4.2	4.6
TU Orif. 5	55	0.86	1.6	1.8	2.1	2.4	0.59	0.71	0.86	1.7	2.3	2.4	2.7	3.1	3.5	4.0	1.3	1.5	3.4	3.8	3.9	4.5	5.0	5.6	6.1
TU Orif. 6	55	1.4	2.5	2.8	3.3	3.8	0.93	1.1	1.3	2.6	3.6	3.7	4.2	4.8	5.5	6.2	2.1	2.4	5.3	6.0	6.1	6.9	7.9	8.9	9.7
TU Orif. 7	55	1.8	3.3	3.8	4.3	5.0	1.2	1.5	1.8	3.5	4.7	4.9	5.6	6.4	7.2	8.1	2.8	3.2	7.0	7.9	8.0	9.2	10.4	11.6	12.7
TU Orif. 8	55	2.6	4.8	5.5	6.4	7.3	1.8	2.2	2.6	5.1	6.9	7.1	8.1	9.3	10.5	11.8	4.0	4.6	10.2	11.4	11.6	13.2	14.9	16.5	17.8
TU Orif. 9	55	3.8	6.6	7.5	8.7	9.9	2.4	2.9	3.4	6.8	9.3	9.4	10.8	12.4	14.2	16.1	5.5	6.3	13.8	15.6	15.4	17.8	20.4	23.3	25.9
TC Orif. 1	55	7.5	11.6	12.7	13.8	14.8	4.4	5.3	6.1	10.1	12.1	14.7	16.1	17.5	18.7	19.8	10.7	12.0	20.0	21.0	18.4	19.7	21.0	22.0	22.8
TC Orif. 2	55	8.1	12.9	14.2	15.6	16.9	4.7	5.6	6.6	11.2	13.8	16.2	17.9	19.7	21.3	22.8	11.4	12.9	22.8	24.2	20.3	22.1	23.8	25.3	26.4
TC Orif. 3	55	9.2	15.1	16.8	18.7	20.5	5.2	6.2	7.4	13.1	16.6	18.7	20.9	23.3	25.7	27.9	12.7	14.5	27.7	29.8	23.7	26.1	28.5	30.8	32.8

[3] Condensing temperature at bubble point.

Correction factor

Refrigerant	Subcooling [K]										
	2	4	10	15	20	25	30	35	40	45	50
R22	0.98	1	1.06	1.11	1.15	1.20	1.25	1.30	1.35	1.39	1.44
R134a	0.98	1	1.08	1.13	1.19	1.25	1.31	1.37	1.42	1.48	1.54
R404A / R507	0.96	1	1.10	1.20	1.29	1.37	1.46	1.54	1.63	1.70	1.78
R407C	0.97	1	1.08	1.14	1.21	1.27	1.33	1.39	1.45	1.51	1.57
R410A	0.97	1	1.08	1.15	1.21	1.27	1.33	1.39	1.45	1.50	1.56

When the subcooling ≠ 4 K then:
Plant capacity / Factor = Table value

Example:
Refrigerant = R134a
Q_{nom} = 8 kW
t_e = –10 °C
t_c = 55 °C
Δt_{sub} = 25 K

Selection:
8 kW / 1.25 = 6.4 kW → TU, Orifice 09

T U A E

Thermostatic
Capacity range
Orifice / Superheat
Ext. equalization

Orifice / Superheat		
	Interchangeable	Adjustable
A	Yes	YES
B	NO	YES
C	NO	NO

N = –40°C → +10 °C
NM = –40°C → –5 °C with MOP
NL = –40°C → –15 °C with MOP
B = –60°C → –25 °C with MOP

TUA(E)
TCAE

Thermostatic valve | Orifice

TUB(E)
TUC(E)
TCBE
TCCE

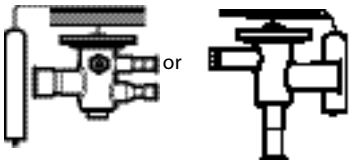

Thermostatic valve incl. orifice

Valve types TUB(E)/TUC(E) and TCBE/TCCE can be replaced by TUA(E) and TCAE types

Notes

TUB/TUBE – Thermostatic expansion valves

The TUB / TUBE serie is delivered with fixed orifice. The thermostatic expansion valves has been developed for soldering into hermetic refrigeration systems.
TU valves are made of stainless steel and are therefore very suitable for use in the food industry.

Features

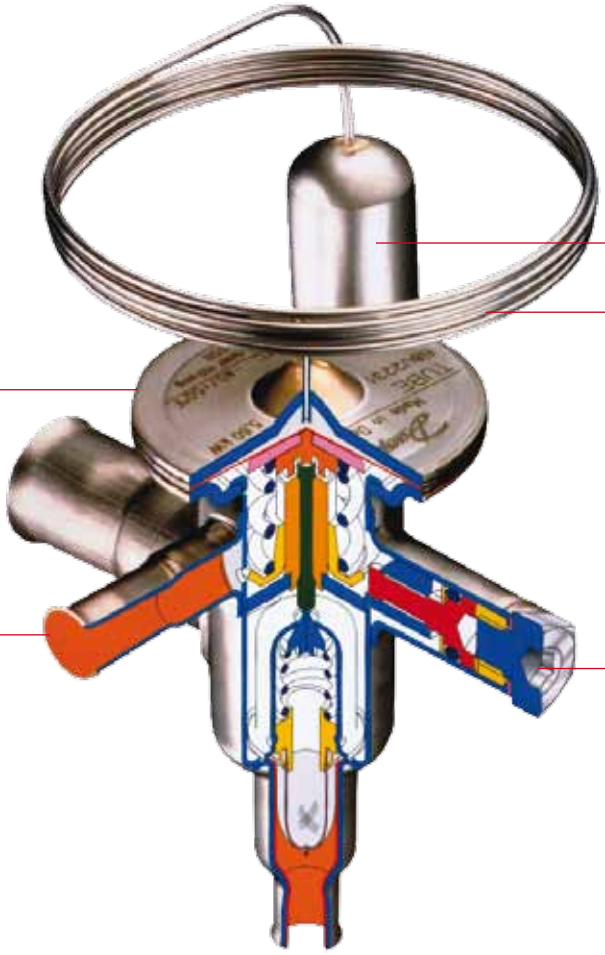

Capillary tube and bulb in stainless steel. Extremly strong and corrosion resistant.

Laser welded stainless steel thermostatic element for unsurpassed joint strength and operational lifetime

Bi-metal connections Stainless steel with rolled on copper cladding for safe, fast and convenient copper-to-copper soldering

Allen key superheat setting screw is convenient and space-saving compared to the standard screwdriver adjustment used in most conventional valves

Applications	Advantages	Facts
· Traditional refrigeration · Heat pump systems · Air conditioning units · Liquid coolers · Ice cube machines · Transport refrigeration	· The use of stainless steel makes the valves light and strong. · Bi-metal connections for safe, fast and convenient soldering. · Stainless steel capillary tube for superior strength and ductility.	· Can be supplied with MOP (Max. Operating Pressure) Protects the compressor motor against excessive evaporating pressure during normal operation. · Valves for special temperature ranges can be supplied. · Only 4 K opening superheat. · Bi-flow function.

Technical data and ordering

Ordering
Angleway
Supplied with bulb strap
Standard valve range

Range N = –40 → +10°C

R22/R407C, R407C, R410A, R134a

Refrigerant	Type	Orifice no.[2]	Rated capacity $Q_{nom.}$[1]		Pressure equalisation	Connection Inlet × Outlet			
			kW	TR		in.	Code no.	mm	Code no.
R22/ R407C [3]	TUB	1	0.92	0.26	int.	1/4 × 1/2	068U2057	-	-
	TUB	2	1.1	0.32	int.	1/4 × 1/2	068U2058	-	-
	TUB	3	1.4	0.41	int.	1/4 × 1/2	068U2059	-	-
	TUB	4	2.5	0.72	int.	1/4 × 1/2	068U2060	-	-
	TUB	5	3.4	0.96	int.	1/4 × 1/2	068U2061	-	-
	TUB	6	5.3	1.5	int.	1/4 × 1/2	068U2062	-	-
	TUB	7	7.0	2.0	int.	3/8 × 1/2	068U2063	-	-
	TUB	8	10.1	2.9	int.	3/8 × 1/2	068U2064	-	-
	TUBE	5	3.4	0.96	ext.	1/4 × 1/2	068U2071	-	-
	TUBE	6	5.3	1.5	ext.	1/4 × 1/2	068U2072	-	-
	TUBE	7	7.0	2.0	ext.	3/8 × 1/2	068U2073	-	-
	TUBE	8	10.1	2.9	ext.	3/8 × 1/2	068U2074	-	-
	TUBE	9	14.1	4.0	ext.	3/8 × 1/2	068U2075	-	-
R407C	TUB	1	0.94	0.27	int.	-	-	6 × 12	068U1901
	TUB	2	1.1	0.32	int.	-	-	6 × 12	-
	TUB	3	1.5	0.42	int.	-	-	6 × 12	068U1903
	TUB	4	2.5	0.72	int.	-	-	6 × 12	068U1904
	TUB	5	3.4	0.96	int.	-	-	6 × 12	068U1905
	TUB	6	5.3	1.5	int.	-	-	6 × 12	068U1906
	TUB	7	7.0	2.0	int.	-	-	10 × 12	068U1907
	TUB	8	10.2	2.9	int.	-	-	10 × 12	068U1908
	TUB	9	14.0	4.0	int.	-	-	10 × 12	068U1909
	TUBE	1	0.94	0.27	ext.	-	-	6 × 12	-
	TUBE	2	1.1	0.32	ext.	-	-	6 × 12	068U1912
	TUBE	3	1.5	0.42	ext.	-	-	6 × 12	068U1913
	TUBE	4	2.5	0.72	ext.	-	-	6 × 12	068U1914
	TUBE	5	3.4	0.96	ext.	1/4 × 1/2	068U1935	6 × 12	068U1915
	TUBE	6	5.3	1.5	ext.	1/4 × 1/2	068U1936	6 × 12	068U1916
	TUBE	7	7.0	2.0	ext.	3/8 × 1/2	068U1937	10 × 12	068U1917
	TUBE	8	10.2	2.9	ext.	3/8 × 1/2	068U1938	10 × 12	068U1918
	TUBE	9	14.0	4.0	ext.	3/8 × 1/2	068U1939	10 × 12	068U1919
R410A	TUB	1	1.34	0.38	int.	1/4 × 1/2	068U1958	-	-
	TUB	2	1.7	0.48	int.	1/4 × 1/2	068U1959	-	-
	TUB	3	2.1	0.60	int.	1/4 × 1/2	068U1960	-	-
	TUB	4	4.1	1.2	int.	1/4 × 1/2	068U1961	-	-
	TUB	5	5.3	1.5	int.	1/4 × 1/2	068U1962	-	-
	TUB	6	8.5	2.4	int.	1/4 × 1/2	068U1963	-	-
	TUBE	7	11.2	3.2	ext.	3/8 × 1/2	068U1973	-	-
	TUBE	8	15.8	4.5	ext.	3/8 × 1/2	068U1974	-	-
	TUBE	9	23.1	6.6	ext.	3/8 × 1/2	068U1975	-	-
R134a	TUB	0	0.42	0.12	int.	1/4 × 1/2	068U2660	-	-
	TUB	1	0.61	0.17	int.	1/4 × 1/2	068U2027	6 × 12	068U2000
	TUB	2	0.72	0.20	int.	1/4 × 1/2	068U2028	6 × 12	068U2001
	TUB	3	0.95	0.27	int.	1/4 × 1/2	068U2029	6 × 12	068U2002
	TUB	4	1.6	0.46	int.	1/4 × 1/2	068U2030	6 × 12	068U2003
	TUB	5	2.1	0.61	int.	1/4 × 1/2	068U2031	6 × 12	068U2004
	TUB	6	3.4	0.95	int.	1/4 × 1/2	068U2032	6 × 12	068U2005
	TUBE	1	0.61	0.17	ext.	-	-	6 × 12	068U2009
	TUBE	2	0.72	0.20	ext.	-	-	6 × 12	068U2010
	TUBE	3	0.95	0.27	ext.	1/4 × 1/2	068U2020	6 × 12	068U2011
	TUBE	4	1.6	0.46	ext.	1/4 × 1/2	068U2021	6 × 12	068U2012
	TUBE	5	2.1	0.61	ext.	1/4 × 1/2	068U2022	6 × 12	068U2013
	TUBE	6	3.4	0.95	ext.	1/4 × 1/2	068U2023	6 × 12	068U2014
	TUBE	7	4.4	1.3	ext.	3/8 × 1/2	068U2024	10 × 12	068U2015
	TUBE	8	6.5	1.9	ext.	3/8 × 1/2	068U2025	10 × 12	068U2016
	TUBE	9	9.0	2.6	ext.	3/8 × 1/2	068U2026	10 × 12	068U2017

Valves with inch connections have 1/4 in. pressure equalisation.
Valves with mm connections have 6 mm pressure equalisation.

[1] Rated capacity $Q_{nom.}$ is based on:
Evaporating temperature
t_e = +4.4 °C
Condensing temperature
t_c = +38 °C
Refrigerant liquid temperature
t_l = +37 °C
Opening superheat
OS = 4 K

[2] TUBE with orifice 0 and 9 and all TUB (internal pressure equalisation) cannot be used for biflow operation.

[3] For R407C plants, please select valves from the dedicated R407C program

[4] Capillary tube length 0.8 m

Ordering
Angleway
Supplied with bulb strap
Standard valve range

[1] Rated capacity $Q_{nom.}$ is based on:
Evaporating temperature
t_e = +4.4 °C
Condensing temperature
t_c = +38 °C
Refrigerant liquid temperature
t_l = +37 °C
Opening superheat
OS = 4 K

[2] TUBE with orifice 0 and 9 and all TUB (internal pressure equalisation) cannot be used for biflow operation.

[3] Capillary tube length 0.8 m

R404A/R507

Range N = –40 → +10°C

Refrigerant	Type	Orifice no.[2]	Rated capacity $Q_{nom.}$[1] kW	Rated capacity $Q_{nom.}$[1] TR	Pressure equalisation	Connection Inlet × Outlet in.	Code no.	mm	Code no.
R404A R507	TUB	1	**0.71**	**0.20**	int.	1/4 × 1/2	068U2094	6 × 12	068U2076
	TUB	2	**0.87**	**0.25**	int.	1/4 × 1/2	068U2095	6 × 12	068U2077
	TUB	3	**1.1**	**0.32**	int.	1/4 × 1/2	068U2096	6 × 12	068U2078
	TUB	4	**2.0**	**0.57**	int.	1/4 × 1/2	068U2097	6 × 12	068U2079
	TUB	5	**2.7**	**0.76**	int.	1/4 × 1/2	068U2098	6 × 12	068U2080
	TUB	6	**4.2**	**1.2**	int.	1/4 × 1/2	068U2099	-	-
	TUBE	1	**0.71**	**0.20**	ext.	1/4 × 1/2	068U2103	6 × 12	068U2085
	TUBE	2	**0.87**	**0.25**	ext.	1/4 × 1/2	068U2104	6 × 12	068U2086
	TUBE	3	**1.1**	**0.32**	ext.	1/4 × 1/2	068U2105	6 × 12	068U2087
	TUBE	4	**2.0**	**0.57**	ext.	1/4 × 1/2	068U2106	6 × 12	068U2088
	TUBE	5	**2.7**	**0.76**	ext.	1/4 × 1/2	068U2107	6 × 12	068U2089
	TUBE	6	**4.2**	**1.2**	ext.	1/4 × 1/2	068U2108	6 × 12	068U2090
	TUBE	7	**5.6**	**1.6**	ext.	3/8 × 1/2	068U2109	10 × 12	068U2091
	TUBE	8	**8.0**	**2.3**	ext.	3/8 × 1/2	068U2110	10 × 12	068U2092
	TUBE	9	**11.3**	**3.2**	ext.	3/8 × 1/2	068U2111	10 × 12	068U2093

Valves with inch connections have ¼ in. pressure equalisation.
Valves with mm connections have 6 mm pressure equalisation.

When the subcooling ≠ 4 K then:
Plant capacity / Factor = Table value

Example:
Refrigerant = R134a
Q_{nom} = 8 kW
t_e = –10°C
t_c = 55°C
Δt_{sub} = 25 K

Selection:
8 kW / 1.25 = 6.4 kW → TU, Orifice 09

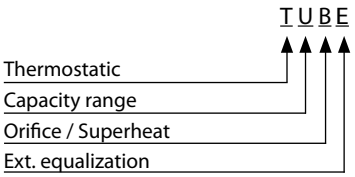

	Orifice / Superheat	
	Interchangeable	Adjustable
A	Yes	YES
B	NO	YES
C	NO	NO

N = –40°C → +10°C
NM = –40°C → –5°C with MOP
NL = –40°C → –15°C with MOP
B = –60°C → –25°C with MOP

TUA(E)
TCAE

Thermostatic valve | Orifice

TUB(E)
TUC(E)
TCBE
TCCE

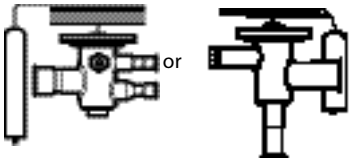

Thermostatic valve incl. orifice

Valve types TUB(E)/TUC(E) and TCBE/TCCE can be replaced by TUA(E) and TCAE types

Capacities

Capacity in kW, range N -40 °C to +10 °C. Opening superheat sh= 4.4 K

Valve type/ Orifice	Cond. temp.[3] [°C]	R134a					R404A/R507					R407C					R22				R410A				
		Capacity in [kW]					Capacity in [kW]					Capacity in [kW]					Capacity in [kW]				Capacity in [kW]				
		Evaporating temp. [°C]					Evaporating temp. [°C]					Evaporating temp. [°C]					Evaporating temp. [°C]				Evaporating temp. [°C]				
		-30	-10	-5	0	5	-40	-35	-30	-10	0	-10	-5	0	5	10	-35	-30	0	5	-10	-5	0	5	10
TU Orif. 0X	25	0.14	0.23	0.25	0.27	0.28	0.14	0.16	0.19	0.30	0.34	0.39	0.42	0.45	0.46	0.47	0.21	0.24	0.41	0.41	0.62	0.65	0.65	0.64	0.59
TU Orif. 0	25	0.18	0.29	0.32	0.35	0.36	0.17	0.20	0.24	0.39	0.44	0.49	0.54	0.58	0.60	0.62	0.27	0.30	0.53	0.54	0.81	0.86	0.87	0.86	0.80
TU Orif. 1	25	0.26	0.43	0.47	0.51	0.51	0.26	0.30	0.35	0.57	0.64	0.71	0.78	0.83	0.87	0.88	0.39	0.45	0.77	0.78	1.1	1.2	1.1	1.2	1.1
TU Orif. 2	25	0.29	0.49	0.54	0.59	0.62	0.28	0.33	0.39	0.66	0.77	0.82	0.91	0.98	1.0	1.1	0.43	0.50	0.91	0.94	1.3	1.4	1.5	1.5	1.4
TU Orif. 3	25	0.40	0.66	0.72	0.78	0.82	0.39	0.45	0.53	0.87	1.0	1.1	1.2	1.1	1.3	1.4	0.59	0.68	1.2	1.2	1.7	1.8	1.9	1.9	1.8
TU Orif. 4	25	0.62	1.1	1.2	1.3	1.4	0.61	0.72	0.84	1.5	1.8	1.8	2.0	2.2	2.4	2.5	0.93	1.1	2.1	2.3	2.9	3.2	3.4	3.6	3.5
TU Orif. 5	25	0.84	1.4	1.6	1.7	1.9	0.81	0.96	1.1	2.0	2.4	2.4	2.7	2.9	3.2	3.3	1.3	1.4	2.8	2.9	3.9	4.3	4.6	4.7	4.6
TU Orif. 6	25	1.3	2.2	2.5	2.7	2.9	1.3	1.5	1.8	3.1	3.7	3.8	4.2	4.6	5.0	5.2	1.9	2.2	4.3	4.5	6.1	6.7	7.2	7.5	7.4
TU Orif. 7	25	1.7	2.9	3.3	3.6	3.9	1.7	2.0	2.3	4.1	4.9	5.0	5.5	6.1	6.6	6.9	2.6	3.0	5.7	6.0	8.1	8.9	9.5	9.8	9.6
TU Orif. 8	25	2.6	4.7	4.9	5.3	5.7	2.5	2.9	3.4	6.0	7.1	7.4	8.2	8.9	9.5	9.9	3.8	4.4	8.3	8.7	11.8	12.8	13.6	13.9	13.3
TU Orif. 9	25	3.6	6.0	6.7	7.4	7.9	3.3	3.9	4.6	8.2	10.0	10.0	11.1	12.3	13.4	14.2	5.1	5.8	11.6	12.3	16.3	18.1	19.6	20.5	20.1
TU Orif. 0X	35	0.15	0.25	0.28	0.30	0.33	0.13	0.16	0.18	0.31	0.36	0.40	0.44	0.48	0.52	0.54	0.22	0.25	0.46	0.49	0.65	0.70	0.73	0.75	0.74
TU Orif. 0	35	0.18	0.32	0.35	0.39	0.42	0.16	0.19	0.23	0.40	0.48	0.52	0.57	0.63	0.67	0.71	0.28	0.32	0.60	0.63	0.86	0.93	0.98	1.0	1.0
TU Orif. 1	35	0.27	0.46	0.52	0.57	0.62	0.24	0.29	0.34	0.58	0.70	0.74	0.82	0.90	0.96	1.0	0.40	0.46	0.88	0.93	1.1	1.2	1.3	1.4	1.4
TU Orif. 2	35	0.30	0.53	0.60	0.66	0.73	0.27	0.32	0.38	0.68	0.84	0.85	0.96	1.1	1.2	1.2	0.45	0.52	1.0	1.1	1.4	1.5	1.6	1.7	1.8
TU Orif. 3	35	0.41	0.71	0.79	0.88	0.96	0.36	0.43	0.51	0.90	1.1	1.1	1.3	1.4	1.5	1.6	0.61	0.70	1.4	1.4	1.8	1.9	2.1	2.2	2.2
TU Orif. 4	35	0.65	1.2	1.3	1.5	1.6	0.57	0.68	0.81	1.5	1.9	1.9	2.1	2.4	2.6	2.9	0.97	1.1	2.3	2.5	3.1	3.5	3.8	4.2	4.3
TU Orif. 5	35	0.87	1.5	1.8	2.0	2.2	0.77	0.92	1.1	2.0	2.6	2.5	2.8	3.2	3.5	3.8	1.3	1.5	3.1	3.4	4.1	4.6	5.1	5.5	5.7
TU Orif. 6	35	1.4	2.4	2.7	3.1	3.4	1.2	1.4	1.7	3.1	4.0	3.9	4.4	4.9	5.5	6.0	2.0	2.3	4.9	5.3	6.4	7.3	8.1	8.8	9.2
TU Orif. 7	35	1.8	3.2	3.6	4.1	4.5	1.6	1.9	2.2	4.2	5.3	5.2	5.8	6.5	7.2	7.9	2.7	3.1	6.5	7.0	8.5	9.6	10.6	11.5	11.9
TU Orif. 8	35	2.7	4.7	5.3	6.0	6.6	2.3	2.8	3.3	6.1	7.7	7.6	8.6	9.6	10.5	11.4	4.0	4.6	9.4	10.2	12.4	13.8	15.2	16.2	16.6
TU Orif. 9	35	3.7	6.4	7.3	8.2	9.2	3.1	3.7	4.4	8.3	10.7	10.2	11.6	13.1	14.6	16.1	5.3	6.1	13.0	14.3	16.9	19.3	21.7	23.8	25.1
TU Orif. 0X	45	0.15	0.26	0.29	0.32	0.36	0.12	0.14	0.17	0.29	0.36	0.40	0.45	0.50	0.54	0.58	0.22	0.25	0.49	0.53	0.65	0.71	0.76	0.79	0.80
TU Orif. 0	45	0.18	0.33	0.37	0.41	0.46	0.15	0.18	0.21	0.38	0.47	0.52	0.58	0.64	0.70	0.76	0.28	0.32	0.64	0.69	0.86	0.94	1.0	1.1	1.1
TU Orif. 1	45	0.27	0.48	0.54	0.61	0.67	0.22	0.26	0.31	0.56	0.70	0.74	0.82	0.91	1.0	1.1	0.41	0.47	0.94	1.0	1.1	1.3	1.4	1.4	1.5
TU Orif. 2	45	0.30	0.54	0.62	0.70	0.79	0.24	0.29	0.34	0.65	0.84	0.85	0.96	1.1	1.2	1.3	0.46	0.53	1.1	1.2	1.4	1.5	1.7	1.8	1.9
TU Orif. 3	45	0.41	0.73	0.83	0.93	1.0	0.33	0.39	0.46	0.86	1.1	1.1	1.3	1.4	1.6	1.7	0.62	0.72	1.5	1.6	1.8	2.0	2.1	2.3	2.4
TU Orif. 4	45	0.65	1.2	1.4	1.6	1.8	0.52	0.62	0.74	1.4	1.9	1.9	2.1	2.4	2.7	3.0	0.99	1.1	2.5	2.8	3.1	3.5	4.0	4.4	4.7
TU Orif. 5	45	0.87	1.6	1.8	2.1	2.4	0.69	0.83	1.0	1.9	2.5	2.5	2.8	3.2	3.6	4.0	1.3	1.5	3.3	3.7	4.1	4.7	5.3	5.8	6.2
TU Orif. 6	45	1.4	2.5	2.8	3.2	3.7	1.1	1.3	1.5	3.0	4.0	3.9	4.4	5.0	5.6	6.3	2.1	2.4	5.2	5.8	6.4	7.3	8.3	9.2	10.0
TU Orif. 7	45	1.8	3.3	3.8	4.3	4.9	1.4	1.7	2.0	3.9	5.2	5.1	5.8	6.6	7.4	8.3	2.7	3.2	6.9	7.6	8.4	9.7	10.9	12.1	13.0
TU Orif. 8	45	2.7	4.8	5.5	6.3	7.1	2.1	2.5	3.0	5.8	7.6	7.5	8.5	9.7	10.8	12.0	4.0	4.6	10.0	11.1	12.3	13.9	15.6	17.1	18.2
TU Orif. 9	45	3.8	6.6	7.6	8.7	9.8	2.8	3.4	4.0	7.8	10.4	10.0	11.5	13.1	14.8	16.6	5.5	6.3	13.7	15.3	16.6	19.1	21.9	24.8	27.2
TU Orif. 0X	55	0.14	0.25	0.29	0.33	0.37	0.10	0.12	0.14	0.26	0.33	0.39	0.44	0.49	0.53	0.58	0.22	0.25	0.51	0.55	0.61	0.67	0.72	0.76	0.79
TU Orif. 0	55	0.18	0.32	0.37	0.42	0.47	0.12	0.15	0.18	0.34	0.43	0.50	0.56	0.63	0.69	0.76	0.28	0.32	0.66	0.72	0.81	0.89	0.97	1.0	1.1
TU Orif. 1	55	0.27	0.48	0.54	0.62	0.69	0.18	0.22	0.26	0.49	0.63	0.70	0.79	0.88	0.98	1.1	0.41	0.47	0.96	1.1	1.1	1.2	1.3	1.4	1.5
TU Orif. 2	55	0.30	0.54	0.62	0.71	0.81	0.20	0.25	0.29	0.57	0.76	0.81	0.92	1.1	1.2	1.3	0.46	0.53	1.1	1.3	1.3	1.5	1.6	1.8	1.9
TU Orif. 3	55	0.40	0.72	0.83	0.95	1.1	0.28	0.33	0.40	0.76	0.98	1.1	1.2	1.4	1.5	1.7	0.60	0.71	1.5	1.6	1.7	1.9	2.0	2.2	2.3
TU Orif. 4	55	0.64	1.2	1.4	1.6	1.8	0.44	0.53	0.66	1.3	1.7	1.8	2.0	2.3	2.6	3.0	0.99	1.1	2.6	2.9	2.9	3.3	3.8	4.2	4.6
TU Orif. 5	55	0.86	1.6	1.8	2.1	2.4	0.59	0.71	0.86	1.7	2.3	2.4	2.7	3.1	3.5	4.0	1.3	1.5	3.4	3.8	3.9	4.5	5.0	5.6	6.1
TU Orif. 6	55	1.4	2.5	2.8	3.3	3.8	0.93	1.1	1.3	2.6	3.6	3.7	4.2	4.8	5.5	6.2	2.1	2.4	5.3	6.0	6.1	6.9	7.9	8.9	9.7
TU Orif. 7	55	1.8	3.3	3.8	4.3	5.0	1.2	1.5	1.8	3.5	4.7	4.9	5.6	6.4	7.2	8.1	2.8	3.2	7.0	7.9	8.0	9.2	10.4	11.6	12.7
TU Orif. 8	55	2.6	4.8	5.5	6.4	7.3	1.8	2.2	2.6	5.1	6.9	7.1	8.1	9.3	10.5	11.8	4.0	4.6	10.2	11.4	11.6	13.2	14.9	16.5	17.8
TU Orif. 9	55	3.8	6.6	7.5	8.7	9.9	2.4	2.9	3.4	6.8	9.3	9.4	10.8	12.4	14.2	16.1	5.5	6.3	13.8	15.6	15.4	17.8	20.4	23.3	25.9

[3] Condensing temperature at bubble point.

Correction factor

Refrigerant	Subcooling [K]										
	2	4	10	15	20	25	30	35	40	45	50
R22	0.98	1	1.06	1.11	1.15	1.20	1.25	1.30	1.35	1.39	1.44
R134a	0.98	1	1.08	1.13	1.19	1.25	1.31	1.37	1.42	1.48	1.54
R404A / R507	0.96	1	1.10	1.20	1.29	1.37	1.46	1.54	1.63	1.70	1.78
R407C	0.97	1	1.08	1.14	1.21	1.27	1.33	1.39	1.45	1.51	1.57
R410A	0.97	1	1.08	1.15	1.21	1.27	1.33	1.39	1.45	1.50	1.56

PHT – Thermostatic expansion valves

PHT thermostatic expansion valves regulate the injection of refrigerant liquid into evaporators.
Injection is controlled by the refrigerant superheat.
Therefore the valves are especially suitable for liquid injection in "dry" evaporators where the superheat at the evaporator outlet is proportional to the evaporator load should always be kept constant.

Features

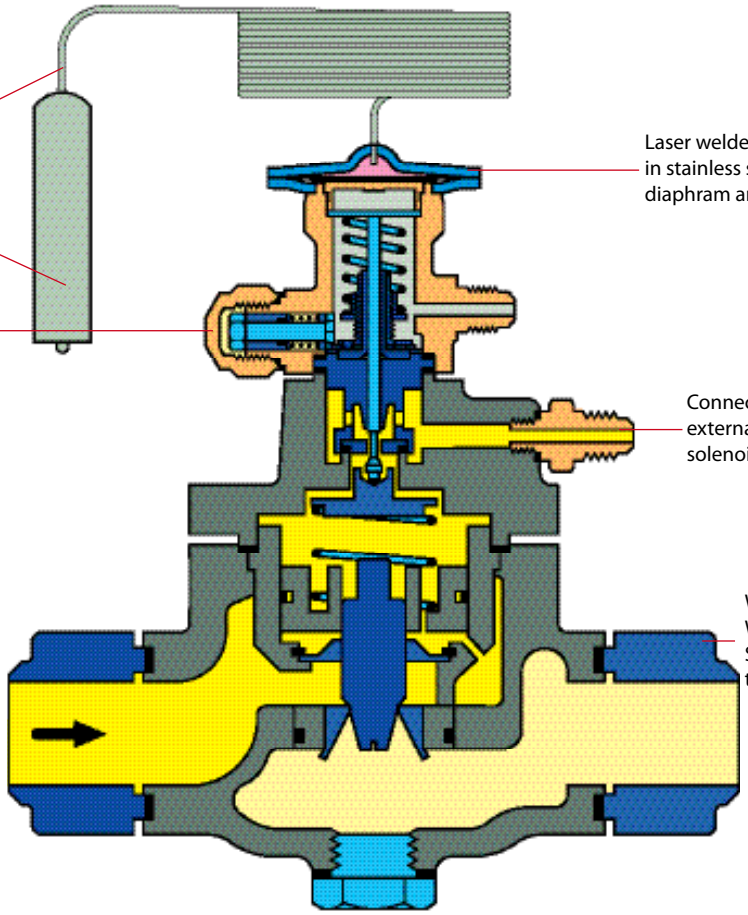

Applications	Advantages	Facts
· Traditional refrigeration and freezing applications · Water coolers and air conditioning	· *Interchangeable orifice assembly* - easier stocking - easy capacity matching - better service. · *Very tight main orifice* Also used as solenoid valve (not PHT 300) · *Superheat* Static superheat SS can be adjusted with setting spindle.	· *Maximum working pressure* - PHT 85 and 125: PS / MWP = 28 bar - PHT 300: PS / MWP = 20 bar · *Rated capacities from 113 to 1944 kW* (32 to 554 TR) for R22 · Can *be supplied with MOP* (Max. Operating Pressure) Protects the compressor motor against excessive evaporating pressure · *Range*: –40 to +50°C

Technical data and ordering

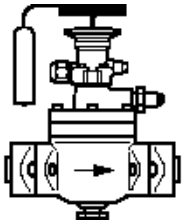

PHT 85
Solder or weld flanges

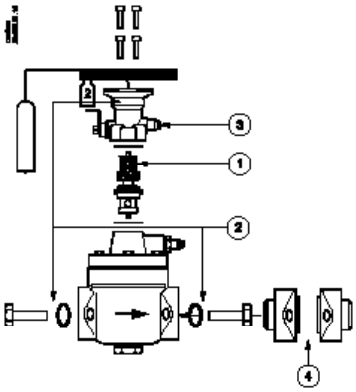

1. Orifice assembly for pilot valve
2. Valve body, flange gaskets, flange bolts and screws
3. Thermostatic element (incl. accessory bag)
4. Flange set

1. Pilot orifice assembly

Type	Code no.
PHT	067B2790

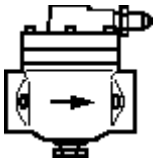

2. Valve body, flange gaskets, flange bolts and screws

SI N	R134a		R404A/R507		R407C		R22		Code no.
	kW	TR	kW	TR	kW	TR	kW	TR	
PHT85-1	61.0	17.4	98.0	27.9	118.0	33.6	113.0	32.2	026H1160
PHT85-2	103.0	29.3	152.0	43.3	188.0	53.6	181.0	51.6	026H1161
PHT85-3	159.0	45.3	244.0	69.5	299.0	85.2	288.0	82.1	026H1162
PHT85-4	212.0	60.4	418.0	119.1	498.0	141.9	481.0	137.0	026H1163
PHT125-1	479.0	136.5	647.0	184.3	820.0	233.6	780.0	222.2	026H1164
PHT300-1	676.0	192.6	1005.0	286.3	1237.0	352.4	1199.0	341.6	026H1165
PHT300-2	1154.0	328.8	1583.0	451.0	2002.0	570.4	1944.0	553.8	026H1166

The rated capacity is based on:
Evaporating temperature t_e = +4.4 °C
Condensing temperature t_c = +38 °C
Refrigerant temperature ahead of valve t_l = +37 °C

3. Thermostatic element (incl. accessory bag)

Range	Refrigerant	Code no.	
		3 m capillary tube	5 m capillary tube
–40 to +10°C	R22/R407C	067B3303	067B3304
	R22/R407C, MOP 100 psig	067B3300	067B3306
	R407C	067B3314	067B3341
	R407C, MOP 95 psig	067B3311	
	R134a	067B3310	067B3315
	R134a, MOP 55 psig	067B3316	067B3317
	R404A / R507		067B3319
+10 to +50°C	R134a		067B3318

4. Flange set

Valve flange	Flange type	Weld flanges		Solder flanges			
		in.	Code no.	in.	Code no.	mm	Code no.
PHT 85	2	1	027N1025				
PHT 85	2			$1^1/_8$	027L1029	28	027L1028
PHT 85	2			$1^3/_8$	027L1035	35	027L1035
PHT 125	3 A	$1^1/_4$	027N1032				
PHT 300	4 A	$1^1/_2$	027N1040				
PHT 300	4 A	2	027N1050				

Capacities

Capacity in kW, range N -40 °C to +10 °C. Opening superheat sh= 4.4 K

		R134a					R404A/R507					R407C					R22			
Valve type/ Orifice	Cond. temp.[3] [°C]	Capacity in [kW]					Capacity in [kW]					Capacity in [kW]					Capacity in [kW]			
		Evaporating temp. [°C]					Evaporating temp. [°C]					Evaporating temp. [°C]					Evaporating temp. [°C]			
		-30	-10	-5	0	5	-40	-35	-30	-10	0	-10	-5	0	5	10	-35	-30	0	5
PHT85-1	25	17.7	38.2	43.2	47.6	50.0	34.2	40.4	47.1	76.0	87.0	85.0	94.0	101.0	107.0	111.0	41.7	48.6	90.0	93.0
PHT85-2	25	31.4	67.0	75.0	82.0	86.0	60.0	70.0	81.0	125.0	139.0	143.0	156.0	166.0	174.0	177.0	73.0	84.0	149.0	151.0
PHT85-3	25	46.4	100.0	113.0	124.0	131.0	90.0	105.0	122.0	194.0	221.0	220.0	242.0	261.0	277.0	285.0	110.0	128.0	234.0	240.0
PHT85-4	25	52.0	108.0	127.0	149.0	171.0	97.0	112.0	139.0	301.0	372.0	317.0	371.0	422.0	464.0	492.0	109.0	128.0	377.0	403.0
PHT125-1	25	160.0	321.0	359.0	390.0	410.0	284.0	325.0	372.0	564.0	616.0	654.0	699.0	729.0	738.0	718.0	357.0	407.0	653.0	642.0
PHT300-1	25	223.0	444.0	498.0	546.0	579.0	393.0	456.0	524.0	812.0	924.0	929.0	1018.0	1098.0	1163.0	1202.0	482.0	552.0	993.0	1024.0
PHT300-2	25	410.0	786.0	875.0	950.0	1000.0	695.0	800.0	909.0	1338.0	1483.0	1571.0	1700.0	1810.0	1889.0	1925.0	863.0	979.0	1640.0	1669.0
PHT85-1	35	19.6	42.9	49.4	56.0	61.0	32.8	39.3	46.5	79.0	95.0	91.0	101.0	111.0	121.0	129.0	45.1	53.0	105.0	112.0
PHT85-2	35	34.4	75.0	86.0	96.0	104.0	57.0	68.0	80.0	130.0	151.0	152.0	168.0	181.0	194.0	203.0	79.0	92.0	173.0	181.0
PHT85-3	35	51.0	113.0	130.0	146.0	160.0	87.0	103.0	121.0	201.0	239.0	234.0	260.0	285.0	307.0	327.0	119.0	139.0	271.0	288.0
PHT85-4	35	58.0	125.0	150.0	180.0	215.0	93.0	111.0	140.0	316.0	404.0	341.0	401.0	460.0	514.0	560.0	121.0	144.0	438.0	483.0
PHT125-1	35	173.0	356.0	403.0	447.0	485.0	272.0	316.0	367.0	581.0	657.0	697.0	756.0	803.0	834.0	842.0	379.0	436.0	759.0	772.0
PHT300-1	35	244.0	494.0	561.0	626.0	684.0	381.0	447.0	518.0	836.0	989.0	981.0	1084.0	1184.0	1276.0	1355.0	521.0	598.0	1134.0	1204.0
PHT300-2	35	448.0	871.0	980.0	1082.0	1170.0	677.0	786.0	901.0	1378.0	1581.0	1659.0	1808.0	1944.0	2063.0	2156.0	934.0	1063.0	1865.0	1952.0
PHT85-1	45	20.7	45.8	53.0	61.0	68.0	28.7	35.3	42.7	77.0	96.0	93.0	104.0	115.0	127.0	137.0	47.1	55.0	116.0	125.0
PHT85-2	45	35.8	80.0	92.0	104.0	115.0	51.0	62.0	74.0	127.0	151.0	155.0	172.0	187.0	202.0	214.0	83.0	97.0	188.0	200.0
PHT85-3	45	53.0	120.0	139.0	158.0	176.0	77.0	93.0	111.0	196.0	239.0	238.0	266.0	293.0	320.0	345.0	125.0	146.0	295.0	318.0
PHT85-4	45	61.0	134.0	163.0	199.0	241.0	81.0	99.0	129.0	311.0	406.0	350.0	413.0	476.0	535.0	588.0	129.0	155.0	477.0	532.0
PHT125-1	45	179.0	375.0	428.0	480.0	527.0	240.0	287.0	339.0	565.0	653.0	712.0	782.0	842.0	889.0	918.0	384.0	447.0	837.0	870.0
PHT300-1	45	255.0	523.0	598.0	673.0	746.0	342.0	408.0	480.0	810.0	981.0	994.0	1104.0	1213.0	1317.0	1415.0	548.0	630.0	1223.0	1314.0
PHT300-2	45	468.0	920.0	1041.0	1158.0	1266.0	616.0	725.0	843.0	1339.0	1570.0	1680.0	1838.0	1986.0	2122.0	2240.0	984.0	1121.0	2006.0	2122.0
PHT85-1	55	21.0	47.2	55.0	63.0	72.0	21.9	28.4	35.7	71.0	91.0	91.0	103.0	115.0	127.0	139.0	47.7	56.0	122.0	133.0
PHT85-2	55	35.5	82.0	95.0	108.0	121.0	40.0	51.0	63.0	117.0	143.0	152.0	169.0	186.0	201.0	215.0	84.0	99.0	197.0	212.0
PHT85-3	55	51.0	121.0	142.0	162.0	183.0	59.0	76.0	94.0	179.0	225.0	233.0	261.0	290.0	318.0	346.0	127.0	149.0	308.0	334.0
PHT85-4	55	61.0	137.0	169.0	207.0	253.0	59.0	77.0	107.0	288.0	385.0	345.0	409.0	472.0	533.0	589.0	134.0	162.0	500.0	559.0
PHT125-1	55	176.0	380.0	437.0	492.0	546.0	190.0	237.0	290.0	522.0	615.0	701.0	781.0	852.0	911.0	955.0	372.0	443.0	891.0	939.0
PHT300-1	55	252.0	531.0	611.0	692.0	772.0	275.0	339.0	410.0	738.0	916.0	972.0	1084.0	1195.0	1305.0	1409.0	561.0	647.0	1272.0	1375.0
PHT300-2	55	466.0	933.0	1061.0	1186.0	1305.0	510.0	618.0	734.0	1231.0	1471.0	1641.0	1800.0	1951.0	2091.0	2216.0	1010.0	1152.0	2081.0	2211.0

[3] Condensing temperature at bubble point.

Correction factor

Refrigerant	Subcooling [K]										
	2	4	10	15	20	25	30	35	40	45	50
R22	0.98	1	1.06	1.11	1.15	1.2	1.25	1.3	1.35	1.39	1.44
R134a	0.98	1	1.08	1.13	1.19	1.25	1.31	1.37	1.42	1.48	1.54
R404A	0.96	1	1.1	1.2	1.29	1.37	1.46	1.54	1.63	1.7	1.78
R407C	0.97	1	1.08	1.14	1.21	1.27	1.33	1.39	1.45	1.51	1.57

When the subcooling ≠ 4 K then:
1. Table value × Factor = Plant capacity
2. Plant capacity/Factor = Table value

Example:
Refrigerant = R134a
Q_o = 130 kW
t_o = -10 °C
t_c = 45 °C
Δt_u = 25 K

Selection:
130 kW : 1.25 = 104 kW = PHT 85, Orifice 03 ✓

Product overview
Complete Danfoss program of thermostatic expansion valves:

Thermostatic Expansion valves with exchangeable orifice

Type	Rated capacities in kW for range N					Connections
	R22	R134a	R404A / R507	R407C	R410A	
T 2 / TE 2	0.9 - 19.7	0.7 - 10.1	0.64 - 15.5	0.9 - 19.7	-	Flare x flare and flare × solder Solder (solder adaptor) × solder
TUA / TUAE	0.63 - 14.1	0.42 - 9.0	0.5 - 11.3	0.66 - 14.0	1.0 - 23.1	Solder - Bi-metal (stainless steel / copper)
TCAE	18.3 - 26.7	13 - 18.6	13 - 18.9	17.8 - 25.2	21.2 - 30.6	Solder - Bi-metal (stainless steel / copper)
TE 5 - TE 55	19.7 - 356	12.9 - 220	13 - 197	21.3 - 385	-	Flare / solder /solder flanges
PHT	105 - 1890	55 - 1083	99 - 1623	117 - 2020	-	Solder or weld flanges

Thermostatic Expansion valves with fixed orifice

Type	Rated capacities in kW for range N					Connections
	R22	R134a	R404A / R507	R407C	R410A	
TUB / TUBE	0.63 - 14.9	0.42 - 9.0	0.5 - 11.3	0.66 - 14.0	1.0 - 23.1	Solder Bi-metal (stainless steel / copper)
TCBE	18.3 - 26.7	13 - 18.6	13 - 18.9	17.8 - .2	21.2 30.6	Solder Bi-metal (stainless steel / copper)
TGE	10 - 134	6 - 87	7 - 92	9 - 121	12 - 161	Flare / solder (copper)
TRE 10 - TRE 80	28 - 245	18 - 196	21 - 187	28 - 245	28 - 350	Solder Bi-metal (stainless steel / copper)

Thermostatic expansion valves parts program:

T 2 and TE 2

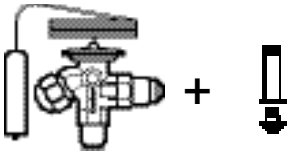

Thermostatic valve Orifice

TUA/TUAE and TCAE

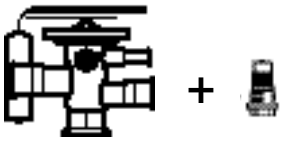

Thermostatic valve Orifice

TE 5 - TE 55

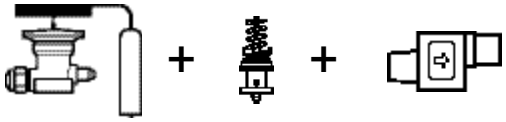

Thermostatic element Orifice Valve body

PHT

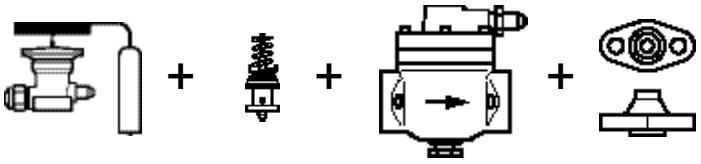

Thermostatic element Orifice Valve body Flanges

Thermostatic expansion valves – PHT overview

AKV – Electronically operated expansion valves

AKV are electrically operated expansion valves designed for refrigerating plant.
The AKV valves are normally operated by a controller from the Danfoss ADAP-KOOL® range.
The valves are operated in pulse-width modulation. This means that the valve is either completly open or completly closed.

Features

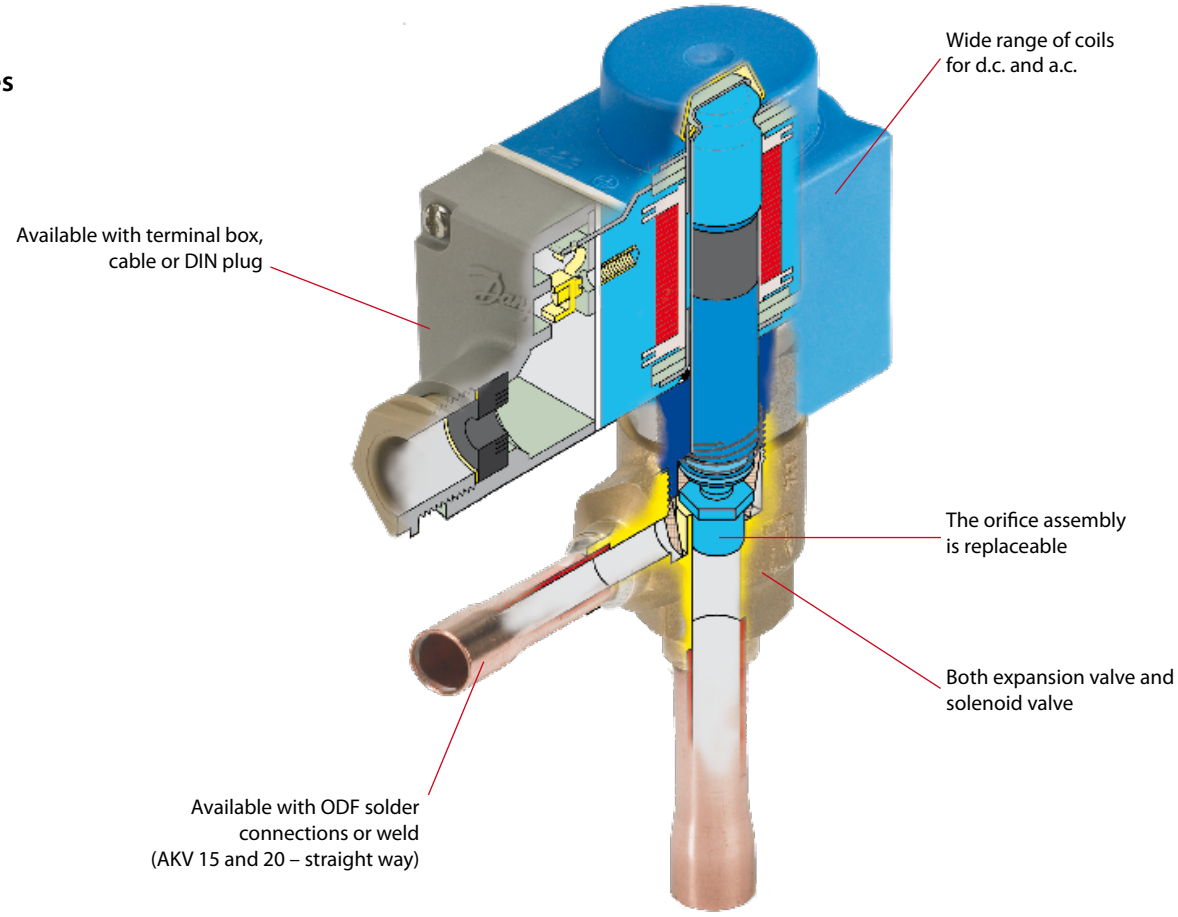

Applications	Advantages	Facts
· Traditional refrigeration · Cold rooms · Water chillers	· The AKV valves are supplied as a part programme, as follows: - Separate valve incl. exchangeable orifice - Separate coil · The valve requires no adjustment	· The AKV 10 valves cover a capacity range from 0.6 kW to 14 kW (404A/R507) and are divided into 7 capacity ranges. · The AKV 15 valves cover a capacity range from 14 kW to 85 kW (404A/R507) and are divided into 4 capacity ranges. · The AKV 20 valves cover a capacity range from 56 kW to 530 kW (404A/R507) and are divided into 5 capacity ranges. · The AKV valves can be used for HCFC, HFC and R744 (up to the stated max. working pressure) refrigerants.

Technical data and ordering

AKV 10

Valve type	Rated capacity kW [1]				k_v value	Connections			
						Solder ODF			
	R22/ R407C	R134a	R404A/R507	R407C	m³/h	Inlet × outlet in.	Code no.	Inlet × outlet mm	Code no.
AKV 10-1	1.0	0.9	0.8	1.1	0.010	⅜ × ½	068F1161	10 × 12	068F1162
AKV 10-2	1.6	1.4	1.3	1.7	0.017	⅜ × ½	068F1164	10 × 12	068F1165
AKV 10-3	2.6	2.1	2.0	2.5	0.025	⅜ × ½	068F1167	10 × 12	068F1168
AKV 10-4	4.1	3.4	3.1	4.0	0.046	⅜ × ½	068F1170	10 × 12	068F1171
AKV 10-5	6.4	5.3	4.9	6.4	0.064	⅜ × ½	068F1173	10 × 12	068F1174
AKV 10-6	10.2	8.5	7.8	10.1	0.114	⅜ × ½	068F1176	10 × 12	068F1177
AKV 10-7	16.3	13.5	12.5	17.0	0.162	½ × ⅝	068F1179	12 × 16	068F1180

AKV 15

AKV 15-1	25.5	21.2	19.6	25.2	0.25	¾ × ¾	068F5000	18 × 18	068F5001
AKV 15-2	40.8	33.8	31.4	40.4	0.40	¾ × ¾	068F5005	18 × 18	068F5006
AKV 15-3	64.3	53.3	49.4	63.7	0.63	⅞ × ⅞	068F5010	22 × 22	068F5010
AKV 15-4	102	84.6	78.3	101	1.0	1⅛ × 1⅛	068F5015	28 × 28	068F5016

AKV 20

Valve type	Rated capacity kW [1]				k_v value	Connections					
						Solder ODF				Weld	
	R22/ R407C	R134a	R404A/R507	R407C	m³/h	Inlet × outlet in.	Code no.	Inlet × outlet mm	Code no.	Inlet × outlet in.	Code no.
AKV 20-1	102	84.6	78.3	101	1.0	1⅜ × 1⅜	042H2020	35 × 35	042H2020	1¼ × 1¼	042H2021
AKV 20-2	163	135	125	170	1.6	1⅜ × 1⅜	042H2022	35 × 35	042H2022	1¼ × 1¼	042H2023
AKV 20-3	255	212	196	252	2.5	1⅝ × 1⅝	042H2024	42 × 42	042H2025	1¼ × 1¼	042H2026
AKV 20-4	408	338	314	404	4.0	2⅛ × 2⅛	042H2027	54 × 54	042H2027	1½ × 1½	042H2028
AKV 20-5	643	533	494	637	6.3	2⅛ × 2⅛	042H2029	54 × 54	042H2029	2 × 2	042H2030

[1] Rated capacities are based on:
Condensing temperature t_c = 32°C
Liquid temperature t_l = 28°C
Evaporating temperature t_e = 5°C

Technical data

Valve type	AKV 10	AKV 15	AKV 20
Tolerance of coil voltage	+10 / –15%	+10 / –15%	+10 / –15%
Enclosure to IEC 529	Max. IP67	Max. IP67	Max. IP67
Working principle (Pulse-width modulation)	PWM	PWM	PWM
Recommended period of time	6 Seconds	6 Seconds	6 Seconds
Capacity (404A/R507)	0.6 to 14 kW	14 to 85 kW	56 to 530 kW
Regulation range (Capacity range)	10 to 100%	10 to 100%	10 to 100%
Connection	Solder	Solder	Solder or weld
Evaporating temperature	–50 to 60°C	– 50 to 60°C	– 40 to 60°C
Ambient temperature	– 50 to 50°C	– 40 to 50°C	– 40 to 50°C
Leak of valve seat	<0.02% of k_v-value	<0.02% of k_v-value	<0.02% of k_v-value
MOPD	18 bar	22 bar	18 bar
Filter, replaceable	Internal 100 µm	External 100 µm	External 100 µm
Max. working pressure	AKV 10-1 to 6 PS=52 bar g AKV 10-7 PS=42 bar g	AKV 15-1,2,3 PS 42 bar g AKV 15-4 PS 28 bar g	28 bar g

Technical data and ordering

Ordering
Coils for AKV valves

AKV	AKV	AKV	AKV	AKV	AKV
10-1 **10-2** **10-3** **10-4** **10-5**	10-6	10-7	15-1 15-2 15-3 15-4	20-1 20-2 20-3	20-4 20-5

D.C. coils	Code no.						
220 V d.c. 20 W, standard with terminal box	018F6851	+	+	+	+	+	+
100 V d.c. 18 W, special with terminal box with DIN plugs	018F6780	+	+	+	+	+	+
230 V d.c. 18 W, special with terminal box with DIN plugs	018F6781[1)] 018F6991[1)]	+	+	+	+	+	+
230 V d.c. 18 W, special with 2.5 m cable with 4.0 m cable with 8.0 m cable	018F6288[1)] 018F6278[1)] 018F6279[1)]	+	+	+	+	+	+

[1)] Recommended for commercial refrigeration plant

A.C. coils	Code no.						
240 V a.c. 10 W, 50 Hz with terminal box with DIN plugs	018F6702 018F6177	+	+	–	+	–	–
240 V a.c. 10 W, 60 Hz with terminal box with DIN plugs	018F6713 018F6188	+	+	–	+	–	–
240 V a.c. 12 W, 50 Hz with terminal box	018F6802	+	+	+	+	+	–
230 V a.c. 10 W, 50 Hz with terminal box with DIN-plugs	018F6701 018F6176	+	+	–	+	–	–
230 V a.c. 10 W, 60 Hz with terminal box with DIN-plugs	018F6714 018F6189	+	+	–	+	–	–
230 V a.c. 10 W, 50/60 Hz with terminal box with DIN-plugs	018F6732 018F6193	+	+	–	+	–	–
230 V a.c. 12 W, 50 Hz with terminal box	018F6801	+	+	–	+	+	–
230 V a.c. 12 W, 60 Hz with terminal box	018F6814	+	+	–	+	+	–
115 V a.c. 10 W, 50 Hz with terminal box with DIN-plugs	018F6711 018F6186	+	+	–	+	–	–
115 V a.c. 10 W, 60 Hz with terminal box with DIN-plugs	018F6710 018F6185	+	+	–	+	–	–
110 V a.c. 12 W, 50 Hz with terminal box	018F6811	+	+	–	+	+	–
110 V a.c. 12 W, 60 Hz with terminal box	018F6813	+	+	–	+	+	–
110 V a.c. 20 W, 50 Hz with terminal box	018Z6904	+	+	+	+	+	+
24 V a.c. 10 W, 50 Hz with terminal box with DIN-plugs	018F6707 018F6182	+	–	–	+	–	–
24 V a.c. 10 W, 60 Hz with terminal box with DIN-plugs	018F6715 018F6190	–	–	–	+	–	–
24 V a.c. 12 W, 50 Hz with terminal box	018F6807	+	–	–	+	+	+
24 V a.c. 12 W, 60 Hz with terminal box	018F6815	+	–	–	+	+	+
24 V a.c. 20 W, 50 Hz with terminal box	018F6901	+	+	+	+	+	+
24 V a.c. 20 W, 60 Hz with terminal box	018F6902	+	+	+	+	+	+

Application example

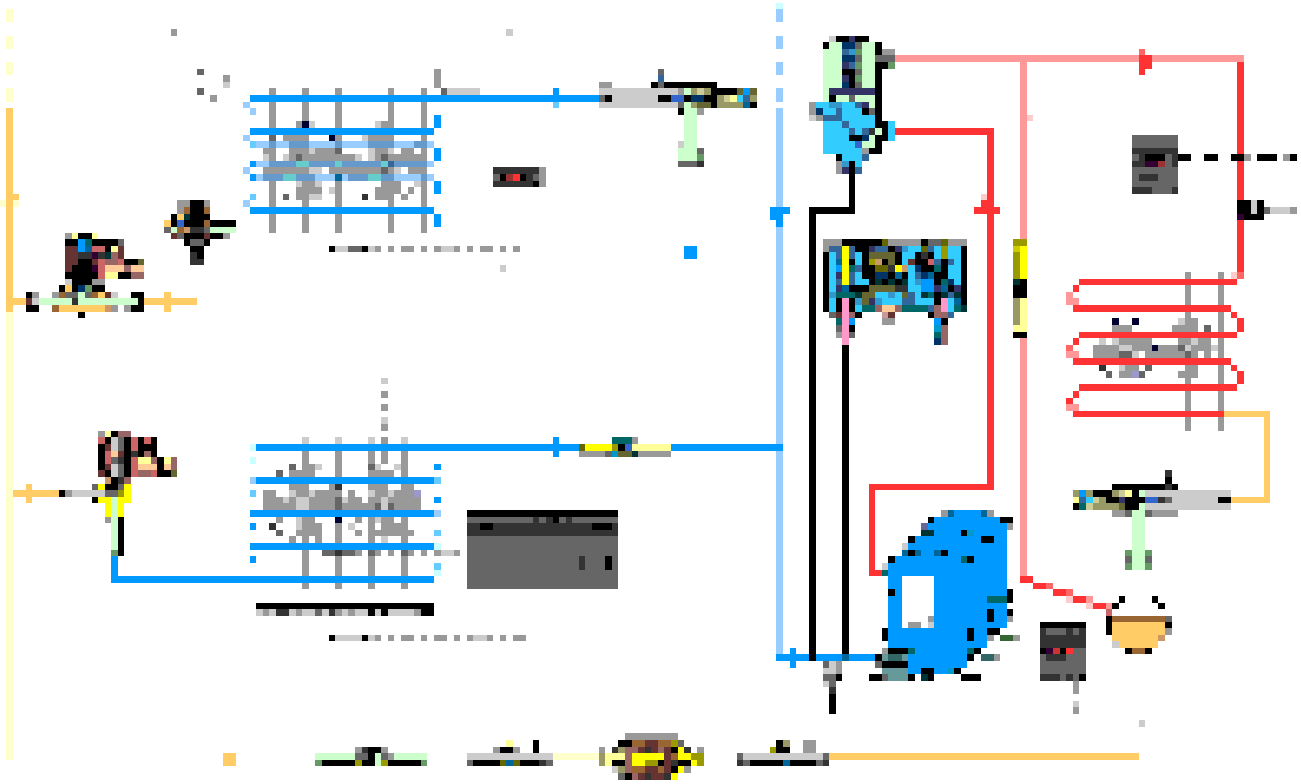

ETS 6 – Electronic expansion valves

Compact and lightweight, the current range are available with different capacities, and can be used with all common refrigerants (e.g R410A, R407C, R404A, R134a, R22). Bi-flow operation is also possible for reversible system such as heat pumps.
The valve design uses uni-polar drives, and different control solutions exist that are compatible with uni-polar drives.

Features

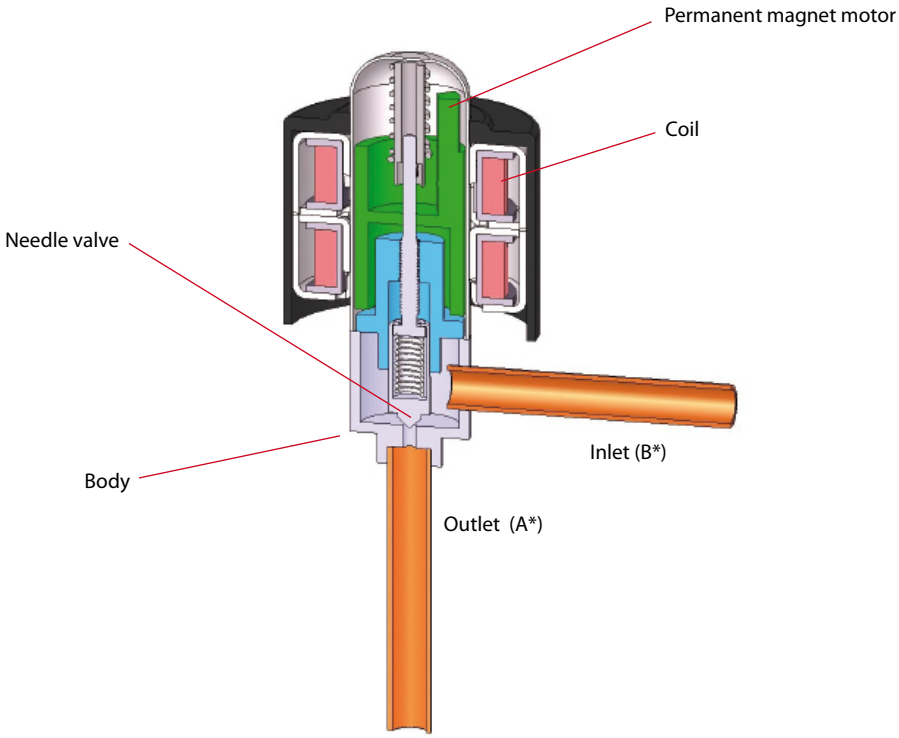

Cross section diagram of ETS 6 series
* Refers to refrigerant flow in cooling mode

Applications	Advantages	Facts
· Heat Pumps · Modular Air Cooled Chillers · VRF, Multi Split · Inverter Mini Split · Bus air conditioning · IT cooling	· Precision flow control with high resolution · Proven know-how and high reliability · Power saving design that enables energy efficiency. · Compact & lightweight hermetic design with removable coil · Bi-flow operation for reversible systems	· ETS 6 are designed for HFC/HCFC conditions including R410A, providing 47 bar (670 psig) working pressure. · EIM 336, EKD 316 and MCX are examples of Danfoss controllers with drivers matching the ETS 6 needs. · For manual operation and service of ETS 6 valves an AST-g service driver is available.

Technical data

Maximum working pressure	47 bar (670 psig), 48 bar (680 psig) in abnormal condition
Compatible refrigerants	HFC, HCFC (e.g. R22, R134a, R404A, R407C, R410A, R507)
Refrigerant oil	All mineral oils and ester oils (to lubricate ETS 6 valve)
Ambient temperature	-30°C to 60°C (-22 °F to 140° F)
Fluid Temperature	-30°C to 70°C (-22 °F to 158° F)
Durability	Tested for 60 Million total pulses supplies to the valve during partially open valve, which is comparable to 150,000 cycles if the valve is operated between 100 to 300 pulses open. Tested for 30,000 full stroke cycles including 20 pulse overdrive at each closing.
Ambient humidity	95% RH or less
Modulation	Permanent magnet type direct operating stepper motor
Excitation method	1-2 phase
Electrical connection	JST XHP-6 and JST XHP-5
Excitation speed	min. 30 pps (pulses per second) to max. 90 pps, recommended 31.3 pps
Operating range	0 to 480 pulses, no holding power required (NOTE: do not apply more than 520 pulses)
Full motion transit time	e.g. 16 sec @ 30 pps, 6 sec @ 80 pps
Installation position **Liquid line solenoid valve**	With coil on the upper side and the valve/coil assembly within ±15°of the vertical axis If using a liquid line solenoid valve, it must be installed in such a way that it does not create liquid hammering in ETS 6 valve
Max. coil winding temperature	115°C (239° F)

Technical specifications and ordering

Valve Specifications

Model No.	Single pack Code no.	I-pack Code no. (100 units per box)	Orifice	Nominal Capacity [kW]					Connection (solder)		Valve tube confi-guration	MWP	MOPD	Max. Reverse Pressure	Flow direction charec-teristic
			[mm]	R22	R134a	R404A/ R507	R407C	R410A	A [mm]	B [mm]		[bar]	[bar]	[bar]	
ETS 6 - 10	034G5005	034G5000	1	2.6	2	1.8	2.7	3.1	7.94	7.94	90°	47	35	35	Bi-flow
ETS 6 - 14	034G5015	034G5010	1.4	5.8	4.5	4.1	5.9	6.8	7.94	7.94	90°	47	35	20	Bi-flow
ETS 6 - 18	034G5026	034G5024	1.8	10.3	8.1	7.3	10.6	12.1	6.35	6.35	90°	47	35	28	Bi-flow
ETS 6 - 25	034G5035	034G5030	2.5	19.6	15.3	13.8	20.1	23	7.94	7.94	90°	47	35	22	Bi-flow
ETS 6 - 32	034G5055	034G5050	3.2	28.8	22.5	20.3	29.6	33.9	7.94	7.94	90°	47	28	12*	Bi-flow

Nominal Capacity based on:
CT=38°C, ET=5°C, SC=0°C, SH=0°C
*Please contact Danfoss if higher maximum reverse pressure valve is required.

Coil Specifications

Model No.	Single pack Code no.	I-pack Code no. (100 units per box)	Relevant valve model	Voltage (current)	Cable length [m]	Protective cable tube length [m]	Enclosure	Insulation class	Connector
ETS 6 Coil	034G5105	034G5100	Coil for ETS 6 valves	12 VDC (0.26A/phase)	0.7	0.6	IP66	Class E (UL Class 105 (A))	JST XHP-6
ETS 6 Coil	034G5115	034G5110	Coil for ETS 6 valves	12 VDC (0.26A/phase)	0.7	0.6	IP66	Class E (UL Class 105 (A))	JST XHP-5

Please contact Danfoss for longer cable length

ETS 12.5 - 400 – Electronic expansion valves

ETS is a series of electrically operated expansion valves for precise liquid injection in evaporators for air conditioning and refrigeration applications.
The valve piston and linear positioning design is fully balanced, providing bi-flow feature as well as solenoid tight shut-off function in both flow directions.
The ETS needs a current or voltage driver as partner to be operated.

Applications	Advantages	Facts
· Heat pumps · Refrigeration · Air conditioning · Chillers	· Precise positioning for optimal control of liquid injection. · Balanced design (ETS 12.5 to 400) providing bi-flow operation as well as solenoid tight shut-off function in both flow directions. · Lower energy consumption · ETS 50 & ETS 100 feature improved process and productivity due to waterless brazing i.e soldering without wet cloth for cooling. · ETS 50 to 400 are all designed with built-in sight glass with moisture indicator. · Internal and external corrosion resistant design	· ETS valves are compatible with wide range of all common refrigerants, HFC, HCFC. · ETS 12.5, ETS25, ETS 50, ETS100 provides working pressure of 45.5 bar (660 psig) and ETS 250, ETS 400 provides 34 bar (493 psig). · EKC316A, 312 and EKD316 are examples of Danfoss controllers with drivers matching the ETS needs. · Equipped with M12 connector for cable connection (cable and connector assemblies as accessories) · For manual operation and service of ETS valves an AST-g service driver is available.

Technical data

Technical data

Compatibie refrigerants	HFC, HCFC (e.g. R410A, R407C, R404A, R134a, R22)
Refrigerant oil	All mineral oils and ester oils
Comply with P.E.D.	Yes
MOPD	33 bar (478.6 psig)
Max. working pressure (PS/MWP)	ETS 12.5/ETS 25/ETS 50/ETS 100: 45.5 bar (660 psig) ETS 250/ETS 400: 34 bar (493 psig)
Refrigerant temperature range	–40°C to 65°C (–40°F to 149°F)
Ambient temperature	–40°C to 60°C (–40°F to 140°F)
Material of Construction	ETS 50, 100: Body and AST enclosure in brass, connections in bi-metal (stainless steel/copper) ETS 12.5, 250, 400: Body and AST enclosure in brass, connections in copper

Electrical data

Motor enclosure	IP67
Stepper motor type	Bi-polar - permanent magnet
Step mode	2 phase full step
Phase resistance	52 Ω ±10%
Phase inductance	85 mH
Holding current	Depends on application. Full current allowed (100% duty cycle)
Step angle	7.5° (motor), 0.9° (lead screw), Gearing ration 8.5:1. $(38/13)^2$:1
Nominal voltage	(Constant voltage drive) 12 V dc -4% +15%, 150 steps/sec.
Phase current	(Using chopper drive) 100 mA RMS -4% +15%,
Max. total power	Voltage / current drive: 5.5 / 1.3 W (UL: NEC class 2)
Step rate	150 steps/sec. (constant voltage drive) 0-300 steps/sec. 300 recommended (chopper current drive)
Total steps	ETS 12.5, 25, 50: 2625 [+160 / -0] steps ETS 100: 3530 [+160 / -0] steps ETS 250 and 400: 3810 [+160 / -0] steps
Full travel time	ETS 12.5, 25, 50: 17 / 8.5 sec. (voltage / current) ETS 100: 23 / 11.5 sec. (voltage / current) ETS 250 and 400: 25.4 / 12.7 sec. (voltage / current)
Lifting height	ETS 12.5, 25, 50: 13 mm (0.5 in.) ETS 100: 16 mm (0.6 in.) ETS 250-400: 17.2 mm (0.7 in.)
Reference position	Overdriving against the full close position
Electrical connection	M12 connector

⚠ NOTE:
Full life time of ETS can only be ensured if oil is present in the system. In oil-free systems, life time of the ETS cannot be guaranteed.

Ordering

ETS 12.5, 25
Valve incl. actuator

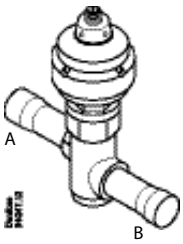

Type	Rated capacity[1]									
	R410A		R407C		R22		R134a		R404A	
	kW	TR	kW	TR	kW	TR	kW	TR	kW	TR
ETS 12.5	70	20	63	18	57	16	45	13	43	12
ETS 25	144	41	129	37	117	34	93	27	88	25

Connection			
ODF × ODF (A × B)		Code no.	
in.	mm	Straight way Single Pack	Angle way Single Pack
½ × ½	-	034G4209	034G4213
-	12 × 12	034G4208	034G4212
⅝ × ⅝	16 × 16	034G4210	034G4214
⅞ × ⅞	22 × 22	034G4211	034G4215
½ × ½	-	034G4201	034G4205
-	12 × 12	034G4200	034G4204
⅝ × ⅝	16 × 16	034G4202	034G4206
⅞ × ⅞	22 × 22	034G4203	034G4207

ETS 12.5 and ETS 25 do not feature sight glass

ETS 50, 100
Valve incl. actuator

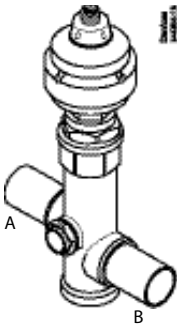

Type	Rated capacity[1]									
	R410A		R407C		R22		R134a		R404A	
	kW	TR	kW	TR	kW	TR	kW	TR	kW	TR
ETS 50	262.3	75.7	240.5	69.1	215	62	170	48.9	161.4	46.3
ETS 100	488.4	140.9	447.8	128.7	400.4	115.4	316.5	91.2	300.5	86.6

Connection		
ODF × ODF (A × B)		Code no.
in.	mm	Single pack
⅞ × ⅞	22 × 22	034G1708
⅞ × 1⅛	22 × 28	034G1705
1⅛ × 1⅛	28 × 28	034G1706
1⅛ × 1⅜	28 × 35	034G1704
1⅛ × 1⅛	28 × 28	034G0507
1⅛ × 1⅜	28 × 35	034G0501
1⅜ × 1⅜	35 × 35	034G0508
1⅝ × 1⅝	-	034G0505

ETS 50 and ETS 100 have integrated sight glass

ETS 250, 400
Valve incl. actuator

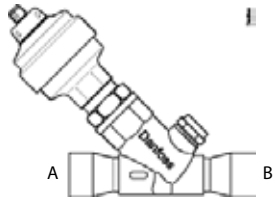

Type	Rated capacity[1]									
	R410A		R407C		R22		R134a		R404A	
	kW	TR	kW	TR	kW	TR	kW	TR	kW	TR
ETS 250	-	-	1212	349	1106	319	874	252	828	239
ETS 400	-	-	1933	556	1764	509	1394	402	1320	381

Connection		
ODF × ODF (A × B)		Code no.
in.	mm	Single pack
1⅛ × 1⅛	28 × 28	034G2600
1⅜ × 1⅜	35 × 35	034G2601
1⅝ × 1⅝	-	034G2602
1⅝ × 1⅝	-	034G3500
2⅛ × 2⅛	54 × 54	034G3501

ETS 250 and ETS 400 have integrated sight glass

[1] The Rated capacity is based on:
Evaporating temperature t_e : 5°C (40°F)
Liquid temperature t_l : 28°C (82°F)
Condensing temperature t_c : 32°C (90°F)
Full stroke opening in normal flow direction

ETS for CO_2 Applications

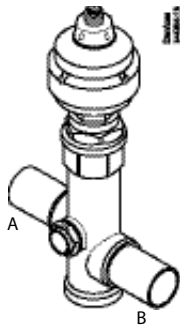

Type	Connection	
	ODF × ODF (A × B) in.	Code no. Single pack
ETS 12.5	⅞ × ⅞ in	034G4220
ETS 25	⅞ × ⅞ in	034G4219
ETS 50	1 ⅛ × 1 ⅛ in	034G1714
ETS 100	1 ⅛ × 1 ⅛ in	034G0515

ETS 50 and ETS 100 have integrated sight glass

ETS for CO_2 can be used for expansion as well as gas bypass.

ETS for CO_2 Applications (MWP 45.5 bar / 660 psig).

Accessories

M12 Female Connector Cable

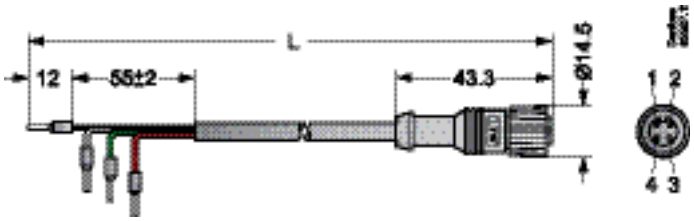

Cable quality	Temperature range	Cable length (L)		Design	Code no.	
					Single pack	Industrial pack (20 pcs)
Jacket: PVC	–50 / +80°C	2 m	6.6 ft	M12 actuator connector to 4 flying wires for driver connection	034G2201	034G2330
		8 m	26.2 ft		034G2200	034G2323
Jacket: CPE	–40 / +80°C	2 m	6.6 ft		034G2202	034G2331

Cable Specification	Jacket	Colour	UV resistant	Insulation	Connection	Outer diameter	M12 connector	Special
PVC cables	Half Matt PVC	Black	Yes	SR-PVC	4 wires (0.33 mm² (22 AWG))	5.0 mm	PU (polyure-thane)	UL VW-1
CPE cables	CPE	Gray	Yes	EPR	4 wires (0.5mm² (20 AWG))	6.3 mm	PU (polyure-thane)	Resistant to gear oil, diesel oil, ethylene glycol, propyl-ene glycol

Note:
CPE cables are recommended for outdoor application.

CCM – Electrically operated valves for CO_2

The CCM is an electrically operated valve designed specifically for operation in CO_2 systems. The valve is capable of functioning both as an expansion valve, and as a gas bypass valve with back-pressure regulation in subcritical applications.
The pressure rating allows for operation in environments where system standby capability is required without the need for auxiliary cooling systems during servicing or power outages.

Advantages and features

- Up to 90 bar (1305 psi) working pressure to accomodate CO_2 system pressures during standstill conditions.
- Precise positioning for optimal control of intermediate pressures in transcritical CO_2 systems or liquid injection in heat exchangers.
- Possibility of bi-flow operation
- MOPD up to 50 bar (725 psi)
- Combined stainless steel butt weld/solder connections for installation in copper piped systems (K65 alloy or standard) as well as steel piped systems.
- Standard M12 connector for simple and flexible connection to the motor driver.
- For manual operation and service of the CCM an AST-g service driver is available.

Technical data

Parameter	CCM
Compatibility	R744
MOPD	50 bar (725 psi)
Max. working pressure (PS/MWP)	90 bar (1305 psi)
Refrigerant temperature range	–40°C to 40°C (–40°F to 104°F)
Ambient temperature	–40°C to 60°C (–40°F to 140°F)
Total stroke	13 mm / 16 mm (0.5 in. / 0.6 in.)
Motor enclosure	IP67

Electrical data

Parameter	CCM	
Stepper motor type	Bi-polar - permanent magnet	
Step mode	2 phase full step	
Phase resistance	52Ω ±10%	
Phase inductance	85 mH	
Holding current	Depends on application. Full current allowed (100% duty cycle)	
Step angle	7.5° (motor), 0.9° (lead screw), Gearing ration 8.5:1. $(38/13)^2$:1	
Nominal voltage	(Constant voltage drive) 12 V dc -4% +15%, 150 steps/sec.	
Phase current	(Using chopper drive) 100 mA RMS -4% +15%,	
Max. total power	Voltage / current drive: 5.5 / 1.3 W (UL: NEC class 2)	
Step rate	150 steps/sec. (constant voltage drive) 0-300 steps/sec. 300 recommended (chopper current drive)	
Total steps	CCM 10, 20, 30 CCM 40	2625 [+160 / -0] steps 3530 [+160 / -0] steps
Full travel time	CCM 10, 20, 30 CCM 40	17 / 8.5 sec. (voltage / current) 23 / 11.5 sec. (voltage / current)
Lifting height	CCM 10, 20, 30 CCM 40	13 mm (0.5 in.) 16 mm (0.6 in.)
Reference position	Overdriving against the full close position	
Electrical connection	4 wire 0.5 mm² (0.02 in²), 0.3 m (1 ft) long cable	

Stepper motor switch sequence:

CCM			Connector
	4	Black	4
	3	White	3
	2	Green	2
	1	Red	1
	Connection 1	Wire Color Pin Out	Connection 2

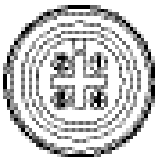

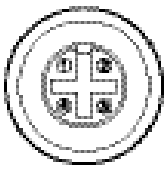

Stepper motor switch sequence:

	STEP	Coil I		Coil II		
		Red	Green	White	Black	
	1	+	-	+	-	
↑ CLOSING ↑	2	+	-	-	+	↓ OPENING ↓
	3	-	+	-	+	
	4	-	+	+	-	
	1	+	-	+	-	

Ordering

Valve incl. actuator
Single pack

Type	Connections (Combi)		Code nos single pack
	Weld[1)] [in]	Solder ODF × ODF [in]	
CCM 10	1/2 × 1/2	5/8 × 5/8	027H7188
CCM 20	3/4 × 3/4	7/8 × 7/8	027H7187
CCM 30	1 × 1	1 1/8 × 1 1/8	027H7186
CCM 40	1 × 1	1 1/8 × 1 1/8	027H7185

[1)] OD according to EN 10220

CCMT – Electrically operated valves for transcritical and subcritical CO_2 applications

The CCMT is an electrically operated valve designed specifically for operation in CO_2 systems. The valve is capable of functioning either as an expansion valve, as a pressure regulator for the gascooler or as a gas bypass valve with back-pressure regulation in transcritical or subcritical applications.

Advantages and features

- Designed for high pressure CO_2 systems with maximum working pressure of 140 bar / 2030 psig.

  Applicable to other common refrigerants as well. The CCMT is not applicable for flammable refrigerants and ammonia.

  The CCMT is compatible with the oil types PAG, POE and PVE
- Regulating cone ensures optimum regulating accuracy, particularly at part load.
- Patented cone and balance design
- The PEEK seat provides excellent valve tightness and robustness.
- Combined butt weld and solder connections
- Top part with built-in strainer
- MOPD up to 90 bar (1305 psi)
- Standard M12 connector for simple and flexible connection to the motor driver.
- For manual operation and service of the CCMT an AST-g service driver is available.
- Low weight and compact design.
- Easy to service. Insert easily taken out by removing top part.

Technical data

Parameter	CCMT
Compatibility	R744
MOPD	90 bar (1305 psi)
Max. working pressure (PS/MWP)	140 bar (2030 psi)
Refrigerant temperature range	–40°C to 60°C (–40°F to 140°F)
Ambient temperature	–40°C to 60°C (–40°F to 140°F)
Total stroke	4.8 mm (0.2 in.)
Motor enclosure	IP 67

Electrical data

Parameter	CCMT
Stepper motor type	Bi-polar - permanent magnet
Step mode	2 phase full step
Phase resistance	52Ω ±10%
Phase inductance	85 mH
Holding current	Depends on application. Full current allowed (100% duty cycle)
Step angle	7.5° (motor), 0.9° (lead screw), Gearing ration 8.5:1. $(38/13)^2$:1
Nominal voltage	(Constant voltage drive) 12 V dc -4% +15%, 150 steps/sec.
Phase current	(Using chopper drive) 100 mA RMS -4% +15%,
Max. total power	Voltage / current drive: 5.5 / 1.3 W (UL: NEC class 2)
Step rate	max. 150 steps/sec. (constant voltage drive) max. 300 steps/sec. (chopper current drive)
Total steps	CCMT 2, 4 & 8: 1100 [+80 / - 0] steps
Full travel time	CCMT 2, 4 & 8: 5 sec. at 220 steps/sec.
Reference position	Overdriving against the full close position
Electrical connection	4 wire 0.5 mm² (0.02 in²), 0.3 m (1 ft) long cable

Stepper motor switch sequence:

CCMT — **Connector**

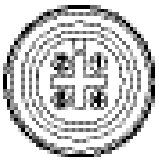

Connection 1	Wire Colour	Connection 2
4	Black	4
3	White	3
2	Green	2
1	Red	1
	Pin Out	

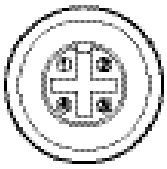

Stepper motor switch sequence:

	STEP	Coil I		Coil II		
		Red	Green	White	Black	
↑ CLOSING ↑	1	+	-	+	-	↓ OPENING ↓
	2	+	-	-	+	
	3	-	+	-	+	
	4	-	+	+	-	
	1	+	-	+	-	

Ordering

Valve incl. actuator

Type	Connections (Combi)		k_v value	Code no.
	Weld[1] [in]	Solder ODF × ODF [in]		
CCMT 2	1/2 × 1/2	5/8 × 5/8	0.17	027H7200
CCMT 4			0.45	027H7201
CCMT 8			0.8	027H7202

[1] OD according to EN 10220

KVS – Electrically operated suction modulating control valves

KVS is a series of electrically operated suction modulating control valves for AC transport and refrigeration applications. Accurate temperature or pressure control is obtained by modulating the refrigerant flow in the evaporator with a current or voltage driver.
With an EKC 368 controller (current driver) and an AKS sensor placed in the media to be controlled, an accuracy better than ± 0.5K can be obtained. The balanced design provides bi-flow operation as well as solenoid shut-off function in both flow directions at MOPD 33 bar (478 psi).

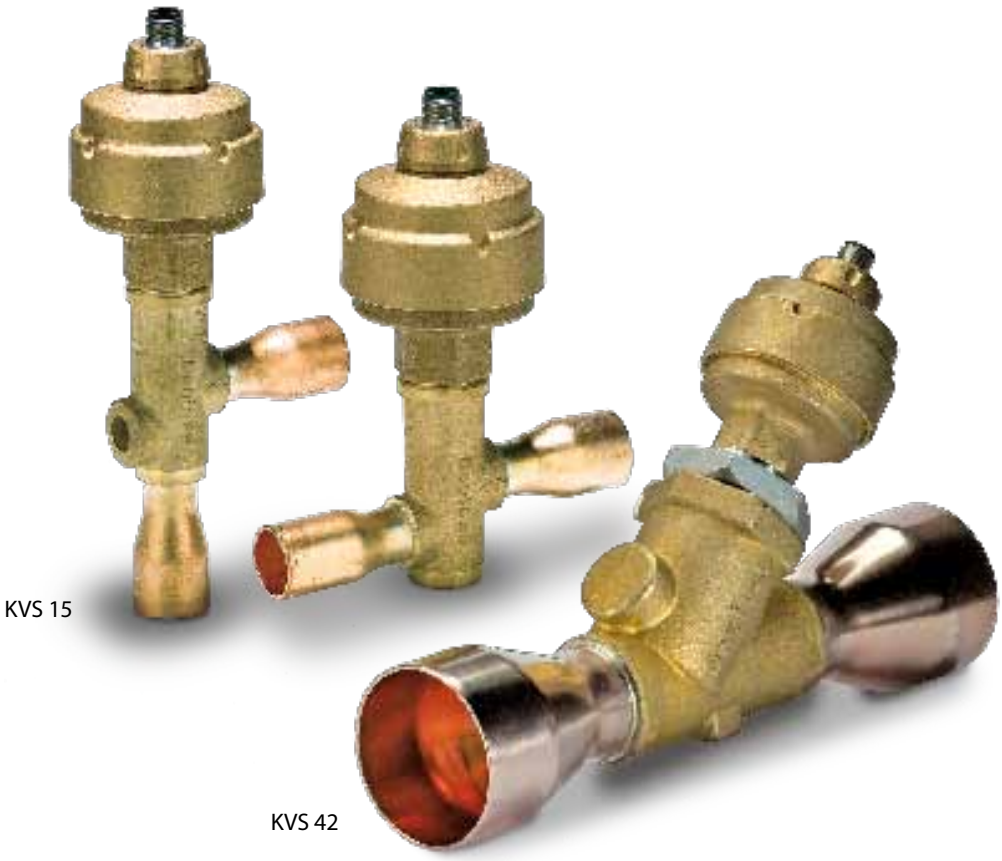

KVS 15

KVS 42

Applications	Advantages	Facts
· Refrigeration · Air conditioning · AC transport · Supermarket	· Biflow · High resolution for precise control. · Low power consumption. · Corrosion resistant design external as well as internal. · Solenoid tight shut off.	· KVS is designed for all common refrigerants HFC, HCFC. · Balanced port design (KVS 42). · For manual operation and service of KVS valves an AST-g service driver is available. · Cable and connector assemblies as accessories.

Technical data

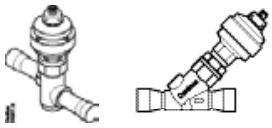

Parameter	KVS 15	KVS 42
Compatible refrigerants	HFC, HCFC (e.g. R410A, R407C, R404A, R134a, R22)	HFC, HCFC (e.g. R410A, R407C, R404A, R134a, R22)
Refrigerant oil	All mineral and ester oils	All mineral and ester oils
CE marking	No	Yes
MOPD	33 bar (478.6 psig)	33 bar (478 psig)
Max. working pressure	45.5 bar (660 psig)	34 bar (493 psig)
Refrigerant temperature range	–40°C to 65°C (–40°F to 149°F)	–40 to +65°C (–40 to +149°F)
Ambient temperature	–40°C to 60°C (–40°F to 140°F)	–40 to +60°C (–40 to +140°F)
Total stroke	13 mm (0.5 in)	17.2 mm (0.68 in.)
Motor enclosure	IP 67	IP 67
Material of Construction	Body and AST Encloser: Brass; Connector: Copper	Body and AST Encloser: Brass; Connector: Copper

Electrical data

Parameter	KVS 15 & 42
Stepper motor type	Bi-polar - permanent magnet
Step mode	2 phase full step
Phase resistance	52 Ω ±10%
Phase inductance	85 mH
Holding current	Depends on application. Full current allowed (100% duty cycle)
Step angle	7.5° (motor), 0.9° (lead screw), Gearing ration 8.5:1. (38/13)2:1
Nominal voltage	(Constant voltage drive) 12 V dc -4% +15%,
Phase current	(Using chopper drive) 100 mA RMS -4% +15%,
Max. total power	Voltage / current drive: 5.5 / 1.3 W (UL: NEC class 2)
Step rate	150 steps/sec. (constant voltage drive) 0-300 steps/sec. 300 recommended (chopper current drive)
Total steps	KVS 15: 2625 [+160 / -0] steps KVS 42: 3810 [+160 / -0] steps
Full travel time	KVS 15: 17 / 8.5 sec. (voltage / current) KVS 42: 25.4 / 12.7 sec. (voltage / current)
Lifting height	KVS 15: 13 mm (0.5 in.) KVS 42: 17.2 mm (0.68 in.)
Reference position	Overdriving against the full close position
Electrical connection	M12 connector

Specifications and Ordering

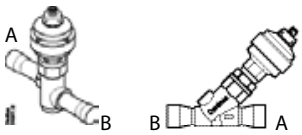

KVS valves in single pack

Type	Rated capacity[1]						KVS valve		
	R22		R134a		R404A/R507		Connection A × B		Code no. single pack
	kW	TR	kW	TR	kW	TR	mm	in.	
KVS 15	5.15	1.31	3.78	0.94	4.58	1.07	16	⅝	034G4252
							22	⅞	034G4253
KVS 42	40.4	11.4	29.3	8.3	35.3	10.0	22	⅞	034G2858
							28	1⅛	034G2850
							35	1⅜	034G2851
							-	1⅝	034G2852

[1]) Rated capacity is the valve capacity at evaporating temperature t_e = –10°C (14°F), condensing temperature t_c = +25°C (77°F) and pressure drop across valve Δp = 0.2 bar (2.9 psig).

Accessories

M12 Female Connector Cable

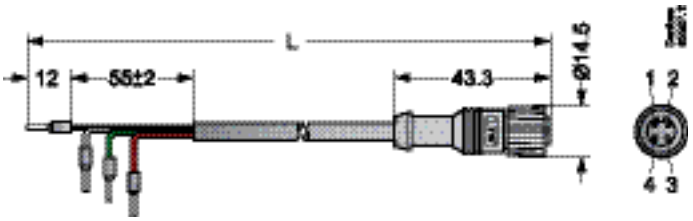

1 - Red
2 - Green
3 - White
4 - Black

Cable quality	Temperature range	Cable length (L)		Design	Code no.	
					Single pack	Industrial pack (20 pcs)
Jacket: PVC	–50 / +80°C	2 m	6.6 ft	M12, 4 pins to actuator and flying wires for driver connection	034G2201	034G2330
		8 m	26.2 ft		034G2200	034G2323
Jacket: CPE	–40 / +80°C	2 m	6.6 ft		034G2202	034G2331

Cable Specification	Jacket	Colour	UV resistant	Insulation	Connection	Outer diameter	M12 connector	Special
PVC cables	Half Matt PVC	Black	Yes	SR-PVC	4 wires (0.33 mm^2 (22 AWG))	5.0 mm	PU (polyure-thane)	UL VW-1
CPE cables	CPE	Gray	Yes	EPR	4 wires (0.5 mm^2 (20 AWG))	6.3 mm	PU (polyure-thane)	Resistant to gear oil, diesel oil, ethylene glycol, propylene glycol

✔ Note: CPE cables are recommended for outdoor application.

Notes

EVR/EVRH - Solenoid valves and coils

EVR valves are direct or servo-operated solenoid valves for liquid, suction and hot gas lines. They are suitable for condensing units and power packs in all refrigeration, freezing and air conditioning applications and are compatible with fluorinated refrigerants, including high-pressure refrigerants such as R410A (EVRH). The valves can be delivered as normally open and normally closed valves as well as with or without manual operation.

Features

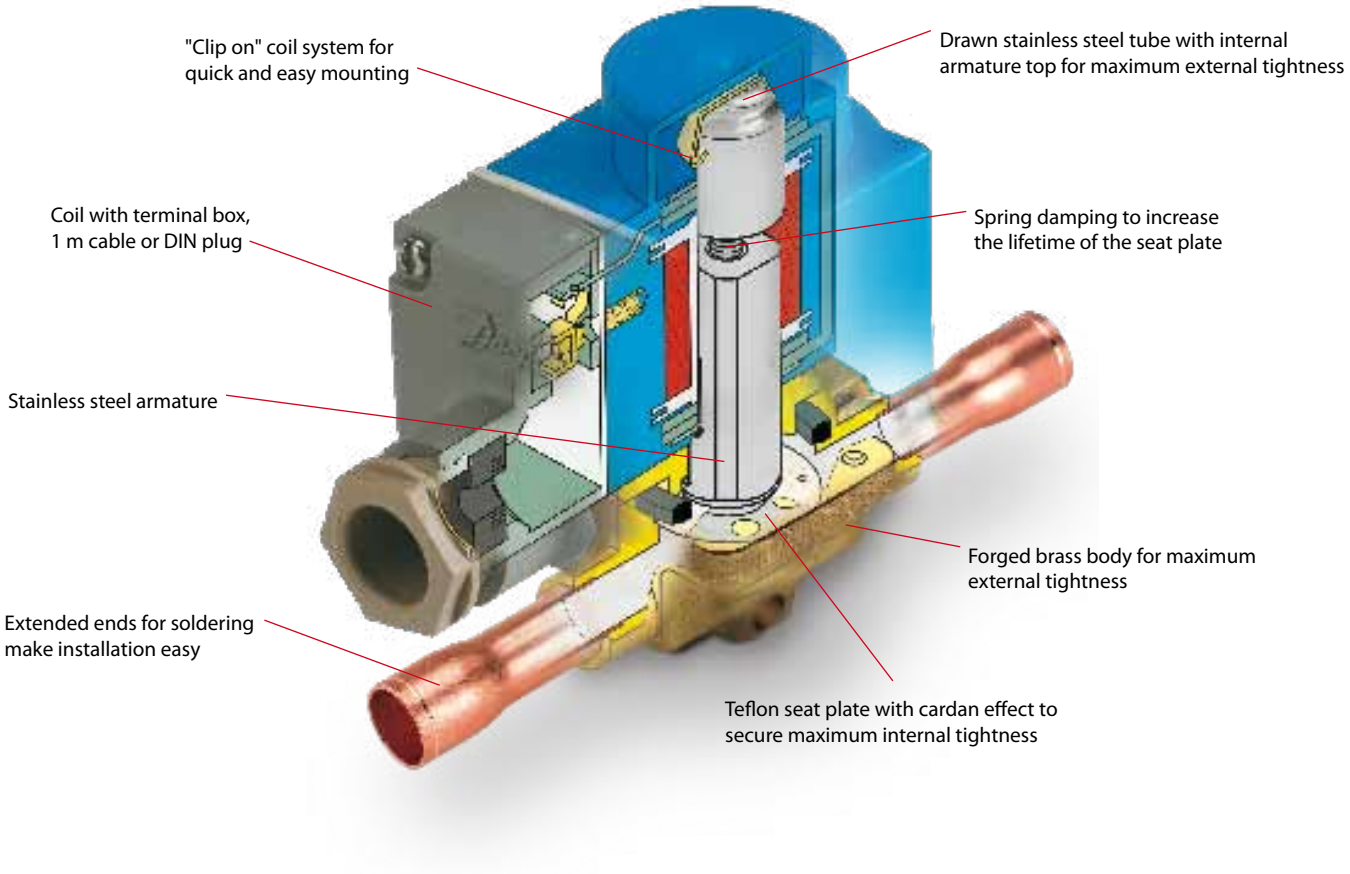

Applications	Advantages	Facts
· Traditional refrigeration · Heat pump systems · Air conditioning units · Liquid coolers · Transport refrigeration	· Complete programme of valves and coils for every application. · Wide range of coils for a.c. and d.c. · Wide range of connection types and sizes. · Normally open or normally closed. · With or without manual operation. · High reliability and durability due to maximum internal and external tightness.	· Can be used for all fluorinated refrigerants (CFC, HCFC and HFC). · Temperature range: –40 to 105°C · Max. working pressure (MWP) 32 bar (EVR 2-6, 45.2 bar / EVR 10, 35 bar / EVR 15-40, 32 bar / EVRH 10-20, 45.2). · MOPD up to 25 bar with 12 W a.c. coil. · 100% test of functionality, internal/external leakage and electrical characteristics.

Technical data and ordering

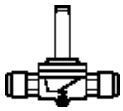

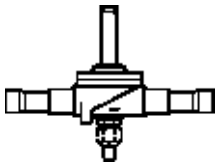

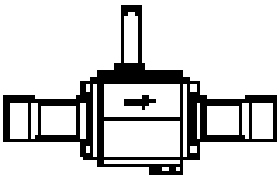

Separate valve bodies, normally closed (NC)

Type	Required coil type	Connection		Code no. Valve body without coil					Max. working pressure bar	k_v value [1]
				Flare	Solder ODF					
		in.	mm	in./mm	in.	mm	With manual operation	Without manual operation		
EVR 2	a.c.	¼	6	032F8056	032F1201	032F1202			45.2	0.16
EVR 3	a.c./d.c.	¼	6	032F8107	032F1206	032F1207			45.2	0.27
		⅜	10	032F8116	032F1204	032F1208				
EVR 6		⅜	10	032F8072	032F1212	032F1213			45.2	0.8
		½	12	032F8079	032F1209	032F1236				
EVR 10		½	12	032F8095	032F1217	032F1218			35	1.9
		⅝	16	032F8098	032F1214	032F1214				
EVR 15		⅝	16	032F8101	032F1228	032F1228			32	2.6
		⅝	16	032F8100			032F1227			
		⅞	22		032F1225	032F1225				
EVR 20	a.c.	⅞	22		032F1240	032F1240			32	5.0
		⅞	22				032F1254			
		1 ⅛	28		032F1244	032F1245				
	d.c.	⅞	22		032F1264	032F1264				
		⅞	22				032F1274			
EVR 22	a.c.	1 ⅜	35		032F3267	032F3267			32	6.0
EVR 25	a.c./d.c.	1 ⅛					032F2200	032F2201	32	10.0
			28				032F2205	032F2206		
		1 ⅜	35				032F2207	032F2208		
EVR 32		1 ⅜	35				042H1105	042H1106	32	16.0
		1 ⅝					042H1103	042H1104		
			42				042H1107	042H1108		
EVR 40		1 ⅝					042H1109	042H1110	32	25.0
			42				042H1113	042H1114		
		2 ⅛	54				042H1111	042H1112		
EVRH 10		½	12		032G1054	032G1055			45.2	1.9
EVRH 15		⅝	16		032G1056	032G1056				2.6
EVRH 20	a.c.	⅞	22		032G1057	032G1057				5.0
EVRH 20	d.c.	⅞	22		032G1058	032G1058				5.0

Mounting bracket

Mounting bracket	For mounting EVR 2, 3, 6 and 10	032F0197

Coils - alternating current a.c

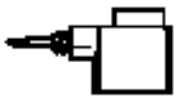

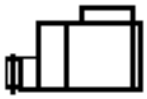

Type	Voltage V	Frequency Hz	Code no. With 1 m 3-core cable IP67	With terminal box IP67	With DIN plugs and protective cap IP20	With DIN plugs	Appendix no.	Power consumption
EVR 2 → 40 (NC)	12	50	018F6256	018F6706	018F6181		15	
	24	50	018F6257	018F6707	018F6182	018F7358	16	
	42	50	018F6258	018F6708	018F6183		17	
	48	50	018F6259	018F6709	018F6184		18	
	115	50	018F6261	018F6711	018F6186	018F7361	22	
	220-230	50	018F6251	018F6701	018F6176	018F7351	31	Holding: 10 W 21 VA
	240	50	018F6252	018F6702	018F6177	018F7352	33	
	380-400	50	018F6253	018F6703	018F6178		37	
	420	50	018F6254	018F6704	018F6179		38	Inrush: 44 VA
	24	60	018F6265	018F6715	018F6190		14	
	115	60	018F6260	018F6710	018F6185		20	
	220	60	018F6264	018F6714	018F6189		29	
	240	60	018F6263	018F6713	018F6188		30	
	110	50/60	018F6280	018F6730	018F6192	018F7360	21	
	220-230	50/60	018F6282	018F6732	018F6193	018F7363	32	

Terminal box with LED light indicator

Terminal box	With built-in light emmiting indicator diode for solenoid valves	018Z0089
DIN socket		042N0156

[1] The k_v value is the water flow in m^3/h at a pressure drop across valve of 1 bar, $\rho = 1000\ kg/m^3$.

EVRS/EVRST – Solenoid valves and coils

EVRS and EVRST are valves made of stainless steel. EVRS 3 is direct operated. EVRS 10, 15 and 20 are servo operated. EVRST 10,15 and 20 are forced servo operated valves used in liquid, suction, hot gas and oil return lines with ammonia or fluorinated refrigerants.

Advantages and features

- Stainless steel valve body and connections
- Max. working pressure 50 barg (suitable for CO_2 subcritical).
- Used for ammonia and all fluorinated refrigerants
- MOPD up to 38 bar with 20 watt a.c. coil
- Wide choice of a.c. and d.c. coils
- Designed for temperatures of media up to 105°C
- Manual stem on EVRS and EVRST 10, EVRST 15 and EVRST 20

Technical data and ordering

Technical data

Refrigerants
R717 (NH_3), R22, R134a, R404A; R744; R410A etc.
Temperature of medium
–40 → +105°C for 10 or 12 watt coil. Max. 130°C during defrosting.
–40 → +80°C for 20 watt coil.

Ambient temperature and enclosure for coil: See "Coils for solenoid valves", lit.no. DKRCC.PD.BS0.A4

Type	Opening differential pressure Δp bar					k_v value [2]	Max. working pressure
	Min.	Max. (MOPD) liquid [1]					
		10 W a.c.	12 W a.c.	20 W a.c.	20 W d.c.	m^3/h	Ps
EVRS 3	0.0	21	25	38	14	0.23	50 barg
EVRS 10	0.05	21	25	38	18	1.5	
EVRST 10	0.0	14	21	38	16	1.5	
EVRS 15	0.05	21	25	38	18	2.7	
EVRST 15	0.0	14	21	38	18	2.7	
EVRS 20	0.05	21	25	38	13	4.5	28 barg for R717, HCFC, HFC, R744[3] 50 barg only for R744, R410A[4]
EVRST 20	0.0	14	21	38	13	4.5	

[1] MOPD for media in gas form is approx. 1 bar greater.
[2] The k_v value is the water flow in m^3/h at a pressure drop in the valve of 1 bar, ρ = 1000 kg/m^3.
[3] All refrigerants in group I according to Pressure Equipment Directive PED 97/23/CE article 9 section 2.1
Group I comprises fluids defined as:
- explosive
- extremely flammable
- highly flammable
- flammable (where the maximum allowable temperature is above flashpoint)
- very toxic
- toxic
- oxidizing

[4] Only for refrigerants in group 2 according to Pressure Equipment Directive PED 97/23/CE article 9 section 2.2
Group 2 comprises all other fluids not referred to in 2.1

Type	Rated capacity[1] kW														
	Liquid					Suction vapour					Hot gas				
	R717	R22	R134a	R404A/ R507	R410A	R717	R22	R134a	R404A/ R507	R410A	R717	R22	R134a	R404A/ R507	R410A
EVRS 3	21.8	4.6	4.3	3.2	4.5						6.5	2.1	1.7	1.7	2.3
EVRS/EVRST 10	142.0	30.2	27.8	21.1	29.7	9.0	3.4	2.5	3.1	4.3	42.6	13.9	11.0	11.3	14.9
EVRS/EVRST 15	256.0	54.4	50.1	38.0	53.5	16.1	6.2	4.4	5.5	7.7	76.7	24.9	19.8	20.3	26.7
EVRS/EVRST 20	426.0	90.6	83.5	63.3	89.1	26.9	10.3	7.3	9.2	12.0	128.0	41.5	32.9	33.9	44.5

[1] Rated liquid and suction vapour capacity is based on evaporating temperature t_e = –10°C, liquid temperature ahead of valve t_l = +25°C, and pressure drop across valve Δp = 0.15 bar.
Rated hot gas capacity is based on condensing temperature t_c = +40°C, pressure drop across valve Δp = 0.8 bar, hot gas temperature t_h = +60°C, and subcooling of refrigerant Δt_{sub} = 4 K.

Type	R 744 Rated capacity kW [2]	
	Liquid	Suction
EVRS 3	6.65	-
EVRS/ EVRST 10	43.3	6.9
EVRS/ EVRST 15	78.0	12.4
EVRS/ EVRST 20	130.0	20.7

[2] Rated liquid and suction vapour capacity is based on evaporating temperature t_e = –40°C, liquid temperature ahead of the vale t_l = – 8°C and pressure drop across the valve Δp = 0.15 bar

Code numbers

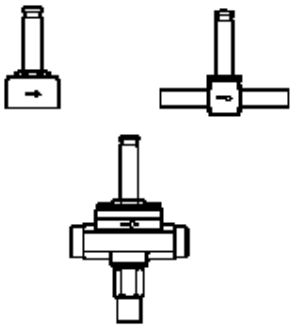

Separate valve bodies

Type	Max. working pressure Ps barg	Connection		Code no.	
		Weld in.	Pipe thread ISO 228/1	With manual stem	Without manual stem
EVRS 3	50	3/8			032F3080
EVRS 3	50		G 1/4		032F3081
EVRS 10	50	1/2		032F3082	
EVRST 10	50	1/2		032F3083	
EVRS 15	50	3/4		032F3084	
EVRST 15	50	3/4		032F3085	
EVRS 20	28	1		032F3086	
EVRST 20	28	1		032F2237	
EVRS 20	50	1		032F5437	
EVRST 20	50	1		032F5438	

Coils See "Coils for solenoid valves", lit.no. DKRCC.PD.BS0.A4.

Clip-on coils

Valve type	Voltage V	Frequency Hz	Code no. With 1 m 3-core cable IP67	Code no. With terminal box IP67	Code no. With DIN plugs and protect. cap IP20	Code no. With DIN plugs**)	Appendix no.*)	Power con-sumption
Alternating current a.c.								
EVR 2 → 40 (NC) EVR 6 → 22 (NO) EVRH 4 → 40 EVRC EVRA EVRAT EVRS / EVRST EVM (NC)	12	50	018F6256	018F6706	018F6181		15	Holding: 10 W 21 VA Inrush: 44 VA
	24	50	018F6257	018F6707	018F6182	018F7358	16	
	42	50	018F6258	018F6708	018F6183		17	
	48	50	018F6259	018F6709	018F6184		18	
	115	50	018F6261	018F6711	018F6186	018F7361	22	
	220-230	50	018F6251	018F6701	018F6176	018F7351	31	
	240	50	018F6252	018F6702	018F6177	018F7352	33	
	380-400	50	018F6253	018F6703	018F6178		37	
	420	50	018F6254	018F6704	018F6179		38	
	24	60	018F6265	018F6715	018F6190		14	
	115	60	018F6260	018F6710	018F6185		20	
	220	60	018F6264	018F6714	018F6189		29	
	240	60	018F6263	018F6713	018F6188		30	
	110	50/60	018F6280	018F6730	018F6192	018F7360	21	
	220-230	50/60	018F6282	018F6732	018F6193	018F7363	32	
Direct current d.c. Coil type I								
EVR 2 → 15 (NC) EVR 25 → 40 (NC/NO) EVR 6 → 15 (NO) EVRC 10 → 15 EVRA 3 → 15 (NC) EVRA 25 → 40 (NC) EVRAT 10 → 15 (NC) EVRS / EVRST 3 → 15 EVM (NC/NO)	12			018F6856			01	20 W
	24			018F6857			02	
	48			018F6859			04	
	110			018F6860			06	
	115			018F6861			07	
	220			018F6851			09	
Direct current d.c. Coil type II								
EVR 20 → 22 (NC/NO) EVRC 20 EVRA 20 EVRAT 20 EVRST 20	12			**018F6886**			01	20 W
	24			**018F6887**			02	
	48			**018F6889**			04	
	110			**018F6890**			06	
	220			**018F6881**			09	

See "Opening differential pressure" under "Technical data" for the valve concerned.

*) Indicates voltage and frequency
**) Can only be used with DIN socket
***) When replacing a coil with terminal box, it is sufficient to change the coil unit itself. Therefore, order coil with DIN plugs and protective cap.

Code numbers

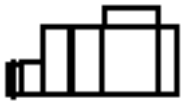

Special coils

Valve type	Voltage V	Frequency Hz	Code no. With terminal box IP67	Appendix no. Indicates voltage and frequency	Power consumption
Alternating current a.c.					
EVRS / EVRST	24	50	018F6807	16	Holding: 12 W 26 VA Inrush: 55 VA
	42	50	018F6808	17	
	48	50	018F6809	18	
	110	50	018F6811	22	
	220-230	50	018F6801	31	
	240	50	018F6802	33	
	380-400	50	018F6803	37	
	24	60	018F6815	14	
	110	60	018F6813	20	
	220	60	018F6814	29	
Alternating current a.c.					
EVR/EVRST	24	50	018F6901		Holding: 20 W 45VA Inrush: 65VA
	24	60	018F6902		
	230	50	018F6905		

Recommended use for EVRH with high MOPD (38 bar)

EVRA/EVRAT – Solenoid valves/coils

EVRA is a direct or servo operated solenoid valve for liquid, suction and hot gas lines with ammonia or fluorinated refrigerants. EVRA valves can be supplied as complete valves or as components, i.e. valve body, flanges and coils. EVRAT has capacities similar to the EVRA but has the advantage of no opening pressure differential is needed – it will open – and stay open, also when there is no flow through that valve.

Advantages and features

- EVRA and EVRAT valves can be used for all non-flammable refrigerants, including R 717, and non-corrosive gases/liquids – assuming seals of correct material are used
- EVRA and EVRAT valves uses a teflon gasket which ensures a very high tightness across valve seat
- EVRA valves has a low pressure drop
- EVRAT valves has a minimal opening differential pressure of 0 (zero)
- The EVRA and EVRAT valves offers a wide range of flange connection dimensions in accordance with standards: DIN ANSI, SOC, SA and FPT
- The EVRA and EVRAT valve range can be used with the wide range of standard Danfoss coils
- Strainer type FA can be mounted directly on the valve body except for EVRA 32 and 40

Connections

There is a wide range of connection possibilities with EVRA 3 to 25 and EVRAT 10-20:

- Butt welding DIN (2448)
- Butt welding ANSI
  (3⁄8 - 1½ in. B36.10 schedule 80, 2 in. B36.10 schedule 40)
- Socket welding ANSI (B 16.11)
- Solder connection DIN (2856)
- Solder connection ANSI (B 16.22
- FPT internal thread, NPT (ANSI/ASME B 1.20.1)

EVRA 32 and 40 are supplied with integrated flanges for either:

- Welding DIN (2448) or
- Welding ANSI (B 36.10)

Technical data and code numbers

Technical data

Type	Opening differential pressure with standard coil Δp bar				Temperature of medium °C	Max. working pressure PB bar	kv-value
		Max. (= MOPD) liquid [2]					
	Min.	10 W a.c.	12 W a.c.	20 W d.c.			m³/h
EVRA 3	0.00	21	25	14	-40 → 105	42	0.23
EVRA 10	0.05	21	25	18			1.5
EVRAT 10	0.00	14	21	16			1.5
EVRA 15	0.05	21	25	18			2.7
EVRAT 15	0.00	14	21	16			2.7
EVRA 20	0.05	21	25	13			4.5
EVRAT 20	0.00	14	21	13			4.5
EVRA 25	0.20	21	25	14			10.0
EVRA 32	0.20	21	25	14			16.0
EVRA 40	0.20	21	25	14			25.0

[1]) The k_v value is the water flow in m^3/h at a pressure drop across valve of 1 bar, $\rho = 1000$ kg/m³.
[2]) MOPD for media in gas form is approx. 1 bar greater.

Code numbers

Complete valves without flanges

	Type	Connection	Code no.[1]	
			10 W coil with 1 m cable	10 W coil with terminal box
Valves with manual operation	EVRA 3	See table "*Flange set*"	032F3102	032F3103
	EVRA 10		032F6207	032F6208
Valves without manual operation	EVRA 10		032F6212	032F6213
	EVRA 15	See table "*Flange set*"	032F6217	032F6218
	EVRA 20		032F6222	032F6223

[1]) Valve body with gaskets, bolts and 10 W a.c. coil. Please specify code no., voltage and frequency. Voltage and frequency can also be given in the form of an appendix number, see table "Appendix numbers", under EVR.

Separate valve bodies

	Type	Connection	Required coil type	Code no.
Valves with manual operation	EVRA 10	See table *Flange set*	a.c. / d.c.	032F6210
	EVRAT 10		a.c. / d.c.	032F6214
	EVRA 15		a.c. / d.c.	032F6215
	EVRAT 15		a.c. / d.c.	032F6216
	EVRA 20		a.c.	032F6220
	EVRA 20		d.c.	032F6221
	EVRAT 20		a.c. / d.c.	032F6219
	EVRA 25		a.c. / d.c.	032F6225
Valves without manual operation	EVRA 3	See table *Flange set*	a.c. / d.c.	032F3050
	EVRA 10		a.c. / d.c.	032F6211
	EVRA 25		a.c. / d.c.	032F6226

Separate valve bodies with butt weld connections

	Type	Butt weld connection		
		Size	DIN	ANSI
			Code no.	Code no.
Valves with manual operation	EVRA 32	1 ¼ in.	042H1126	042H1140
	EVRA 32	1 ½ in.	042H1131	042H1141
	EVRA 40	1 ½ in.	042H1128	042H1142
	EVRA 40	2 in.	042H1132	042H1143

Flange sets

		Connection		Code no.
		mm	in.	
EVRA 3, 10 and 15 EVRAT 10 and 15	Butt welding DIN (2448), Tongue flange sets	10	3/8	027N1112
		15	½	027N1115
		20	¾	027N1120
	Butt welding ANSI B 36.10, Tongue flange sets	10	3/8	027N2020
		15	½	027N2021
		20	¾	027N2022
	Socket welding ANSI (B 16.11), Tongue flange sets	10	3/8	027N2010
		15	½	027N2011
	Solder DIN (2856), Tongue flange sets	16		027L1116
		22		027L1122
	Solder ANSI B 16.22, Tongue flange sets		5/8	027L1117
			7/8	027L1123
	FPT internal thread, NPT (ANSI / ASME B 1.20.1), Tongue flange sets	10	3/8	027G1005
		15	½	027G1006
EVRA 20 and 25 EVRAT 20	Butt welding DIN (2448), Tongue flange sets	20	¾	027N1220
		25	1	027N1225
		32	1¼	027N1230
	Butt welding ANSI B 36.10, Tongue flange sets	20	¾	027N3031
		25	1	027N3032
		32	1¼	027N3033
	Socket welding ANSI (B 16.11), Tongue flange sets	20	¾	027N2001
		25	1	027N2002
	Soldering DIN (2856), Tongue flange sets	22		027N1222
		28		027N1228
	Soldering ANSI B 16.22, Tongue flange sets		7/8	027N1223
			1 1/8	027N1229
	FPT internal thread, NPT (ANSI / ASME B 1.20.1), Tongue flange sets	20	¾	027G1001
		25	1	027G1002

Code numbers

Clip-on coils

Valve type	Voltage V	Frequency Hz	Code no. With 1 m 3-core cable IP67	Code no. With terminal box IP67	Code no. With DIN plugs and protect. cap IP20	Code no. With DIN plugs**)	Appendix no.*)	Power con-sumption
Alternating current a.c.								
EVR 2 → 40 (NC) EVR 6 → 22 (NO) EVRH 4 → 40 EVRC EVRA EVRAT EVRS / EVRST EVM (NC)	12	50	018F6256	018F6706	018F6181		15	Holding: 10 W 21 VA Inrush: 44 VA
	24	50	018F6257	018F6707	018F6182	018F7358	16	
	42	50	018F6258	018F6708	018F6183		17	
	48	50	018F6259	018F6709	018F6184		18	
	115	50	018F6261	018F6711	018F6186	018F7361	22	
	220-230	50	018F6251	018F6701	018F6176	018F7351	31	
	240	50	018F6252	018F6702	018F6177	018F7352	33	
	380-400	50	018F6253	018F6703	018F6178		37	
	420	50	018F6254	018F6704	018F6179		38	
	24	60	018F6265	018F6715	018F6190		14	
	115	60	018F6260	018F6710	018F6185		20	
	220	60	018F6264	018F6714	018F6189		29	
	240	60	018F6263	018F6713	018F6188		30	
	110	50/60	018F6280	018F6730	018F6192	018F7360	21	
	220-230	50/60	018F6282	018F6732	018F6193	018F7363	32	

Direct current d.c. Coil type I

EVR 2 → 15 (NC) EVR 25 → 40 (NC/NO) EVR 6 → 15 (NO) EVRC 10 → 15 EVRA 3 → 15 (NC) EVRA 25 → 40 (NC) EVRAT 10 → 15 (NC) EVRS / EVRST 3 → 15 EVM (NC/NO)	12			018F6856			01	20 W
	24			018F6857			02	
	48			018F6859			04	
	110			018F6860			06	
	115			018F6861			07	
	220			018F6851			09	

Direct current d.c. Coil type II

EVR 20 → 22 (NC/NO) EVRC 20 EVRA 20 EVRAT 20 EVRST 20	12			018F6886			01	20 W
	24			018F6887			02	
	48			018F6889			04	
	110			018F6890			06	
	220			018F6881			09	

See "Opening differential pressure" under "Technical data" for the valve concerned.

*) Indicates voltage and frequency
**) Can only be used with DIN socket
***) When replacing a coil with terminal box, it is sufficient to change the coil unit itself. Therefore, order coil with DIN plugs and protective cap.

Notes

VHV/STF – 4-way reversing valves

Pilot operated 4-way reversing valves allow an inversion of the refrigeration cycle, changing from cooling mode in summer to heating mode in winter. 4 way valves are also used in defrost cycles in order to allow hot gas to be sent into iced up evaporators. The cycle inversion is initiated by a small solenoid pilot valve, which controls the movement of a slider, and in turn governs the refrigerant flow path. The valve is connected to the discharge and suction of the compressor.

Features

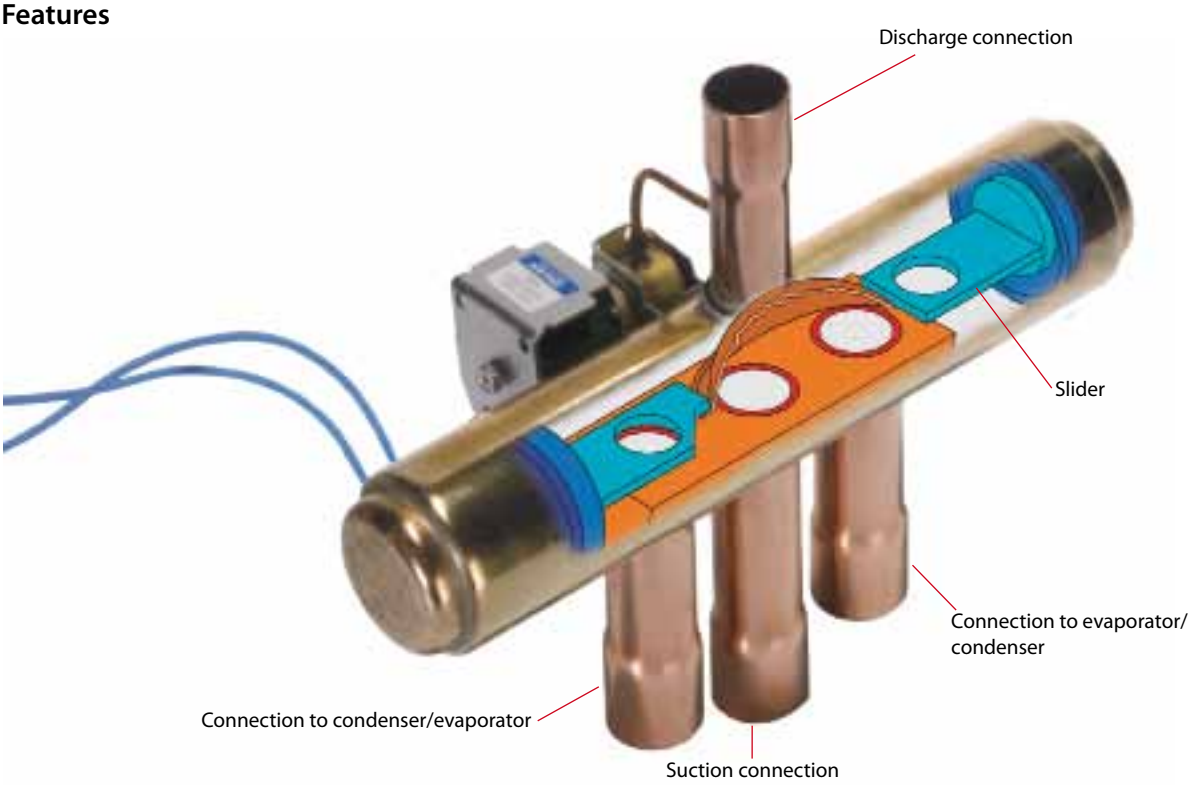

Applications	Advantages	Facts
· Heat pump applications · Reversing chillers · Packaged air conditioning systems · Room air conditioning systems	· Each model can be used with R410A refrigerant as well as R407C, R134a, R404A, R22 · Different tube diameters and configurations available · Designed for instantaneous changeover with minimum pressure differential · Minimized leakage in the valve · Reduced pressure drop due to unique design (shape of internal elements)	· Wide application range for all commonly used refrigerants: (R134a, R404A, R407C, R22 and R410A) · Max. working pressure: 45 bar · Ambient temperature: -20 to 55°C · Full capacity range up to 400 kW · Largest valve available on the market (VHV-6001) · 30 years of experience and know-how

Technical data and ordering

Model	Discharge		Suction		Nominal capacity [1]	Style	Code no.	Box qty
	I.D. mm	O.D. Inch	I.D. mm	O.D. Inch	kW			
STF-0101G	7.95	5/16	9.50	3/8	1.6 - 5.1	A	061L1206	4
STF-0101G	7.95	5/16	9.50	3/8	1.6 - 5.1	A	061L1188	45
STF-0104G	7.95	5/16	9.50	3/8	2.4 - 6.4	A	061L1143	45
STF-0201G	9.50	3/8	12.70	1/2	2.8 - 11.4	A	061L1207	3
STF-0201G	9.50	3/8	12.70	1/2	2.8 - 11.4	A	061L1144	32
STF-0204G	9.50	3/8	15.90	5/8	2.8 - 11.4	D	061L1145	32
STF-0205G	7.95	5/16	12.70	1/2	2.8 - 11.4	B	061L1146	32
STF-0208G	9.50	3/8	15.90	5/8	2.8 - 11.4	C	061L1147	32
STF-0209G	9.50	3/8	12.70	1/2	2.8 - 11.4	B	061L1148	32
STF-0214G	12.70	1/2	15.90	5/8	2.8 - 11.4	D	061L1149	32
STF-0301G	12.70	1/2	15.90	5/8	5.3 - 14.6	E	061L1208	4
STF-0306G	12.70	1/2	19.05	3/4	5.3 - 14.6	E	061L1151	32
STF-0401G	12.70	1/2	19.05	3/4	8.3 - 29.2	B	061L1209	2
STF-0401G	12.70	1/2	19.05	3/4	8.3 - 29.2	B	061L1152	24
STF-0404G	12.70	1/2	19.05	3/4	8.4 - 33	B	061L1193	24
STF-0409G	12.70	1/2	22.20	7/8	8.3 - 29.2	B	061L1154	24
STF-0413G	15.90	5/8	22.20	7/8	8.3 - 29.2	B	061L1155	24
STF-0420G	12.70	1/2	22.20	7/8	8.4 - 33	B	061L1156	24
STF-0712G	19.05	3/4	22.20	7/8	21 - 53	B	061L1223	1
STF-0712G	19.05	3/4	22.20	7/8	21 - 53	B	061L1195	6
STF-0715G	22.20	7/8	28.60	1 1/8	21 - 53	B	061L1158	6
STF-0728G	22.20	7/8	22.20	7/8	21 - 53	B	061L1160	6
STF-1511G	22.20	7/8	28.60	1 1/8	41 - 61	F	061L1224	1
STF-1513G	22.20	7/8	34.95	1 3/8	41 - 61	F	061L1217	1
STF-1514G	28.60	1 1/8	34.95	1 3/8	41 - 61	F	061L1218	1
STF-2011G	22.20	7/8	28.60	1 1/8	41 - 77	B	061L1219	1
STF-2017G	28.60	1 1/8	34.95	1 3/8	41 - 77	B	061L1225	1
STF-2501G [2]	25.40	1	31.80	1 1/4	55 - 98	G	061L1278	1
STF-2505G	28.60	1 1/8	34.95	1 3/8	55 - 98	G	061L1279	1
STF-2506G	28.60	1 1/8	41.30	1 5/8	55 - 98	G	061L1280	1
STF-3001G	31.80	1 1/4	38.10	1 1/2	68 - 129	G	061L1281	1
STF-3003G	28.60 [3]	1 1/8 [5]	41.30	1 5/8	68 - 129	G	061L1282	1
STF-4001G	38.10	1 1/2	44.50	1 3/4	122 - 195	G	061L1284	1
STF-4002G	41.30 [3]	1 5/8 [5]	41.30	1 5/8	122 - 195	G	061L1285	1
STF-5001G	38.10	1 1/2	54.00	2 1/8	183 - 256	G	061L1286	1
STF-5002G	41.30 [3]	1 5/8 [5]	54.00	2 1/8	183 - 256	G	061L1287	1
VHV-6001	41.30 [3]	1 5/8 [5]	66.70	2 5/8	267 - 374	G	061L1186	1

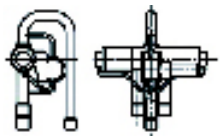
A

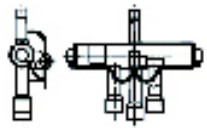
B

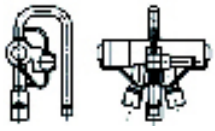
C

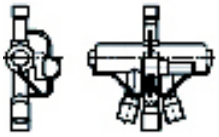
D

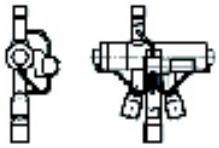
E

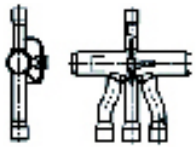
F

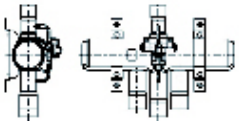
G

Model [4]	Cable length mm	Rated voltage	Code no.	Box qty
STF-01AB500A1	600	24 V AC	061L2092	10
STF-01AB503B1	1200	24 V AC	061L2038	100
STF-01AJ506B1	600	220-240 V AC	061L2093	10
STF-01AJ504F1	1200	208-240 V AC	061L2125	1
STF-01AJ504F1	1200	208-240 V AC	061L2094	10
STF-01AJ512D1	2000	220-240 V AC	061L2095	10
STF-01AJ512D1	2000	220-240 V AC	061L2074	60

1) The nominal capacities for R407C
2) STF-2501G does not have a bracket
3) Refers to O.D.
4) STF coils can be used with all STF and VHV valves
5) Refers to I.D.
NOTE: R407C and R410A: For discharge and suction, I.D. describes exact inner diameter of valve connections. O.D. relates to the outer diameter of connection pipe in the system.

KP – Pressure controls and temperature controls

KP pressure controls are designed to protect refrigeration systems from excessively high discharge pressures, excessively low suction pressures, to start/stop compressors or to operate fans of aircooled condensers. KP temperature controls with adsorption charge are the optimum choice for frost protection of chillers. The enhanced contact system for 16 A makes it possible to operate electrical motors up to 2 kW directly, without the use of contactors.

Features

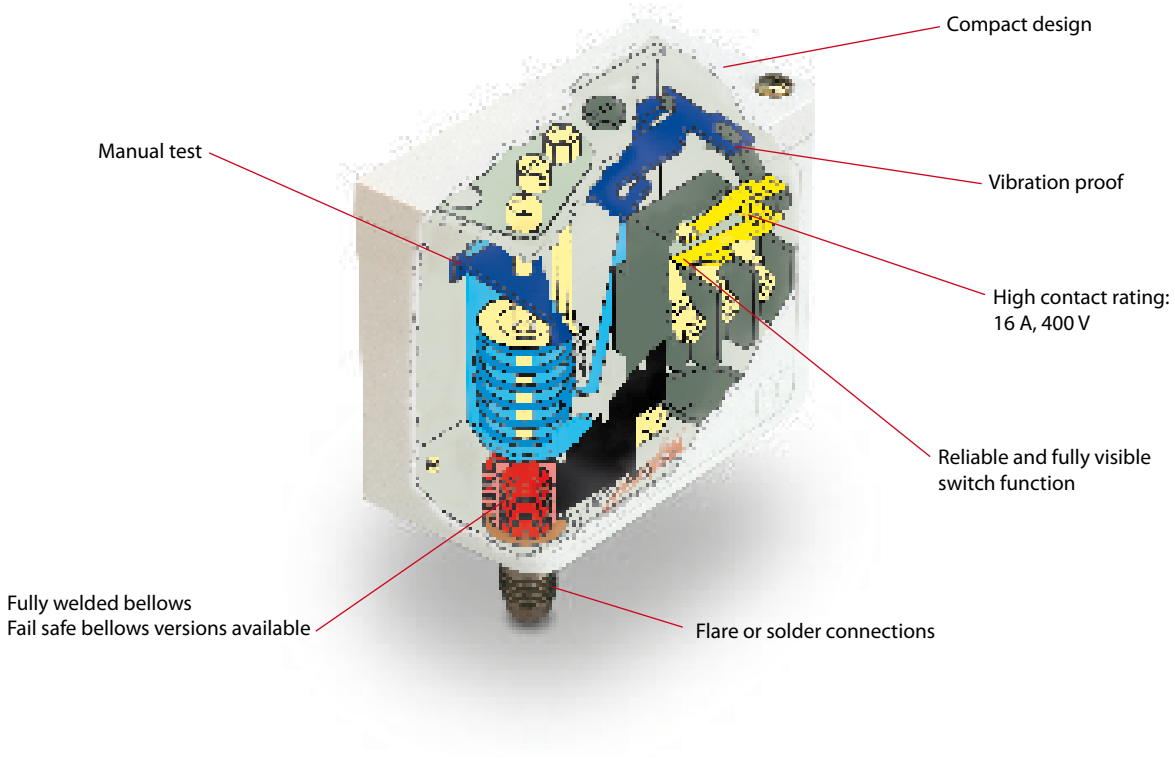

Applications	Advantages	Facts
· Traditional refrigeration · Heat pump systems · Air conditioning units · Liquid coolers · Transport refrigeration	· Easy to handle compact design with large and visible scale plates. · Vibration and shock resistant. · Accurate and reliable compressor operation due to excellent electro-mechanical function. · Easy functional check with manual test function of contact system (no tools). · Easy to install electrical connection which also facilitates rack mounting.	· Can be used for all fluorinated refrigerants. The KP-A types can be used for ammonia. · Pressure controls available with flare, solder or capillary tube connections. · Temperature controls available with capillary sensor, air sensor or cylindrical pocket sensor. · IP30 and IP44 enclosures available.

Technical data and ordering

Pressure controls for fluorinated refrigerants

Pressure	Type	Low pressure (LP)		High pressure (HP)		Reset		Contact system	Code no.		
		Regulating range [bar]	Differential Δp [bar]	Regulating range [bar]	Differential Δp [bar]	Low pressure LP	High pressure HP		1/4 in. 6 mm flare	1/4 in. ODF solder	6 mm ODF solder
Low	KP 1	–0.2 - 7.5	0.7 - 4	-	-	Aut.	-	SPDT	060-110166[3])	060-111266[3])	060-111066[3])
Low	KP 1	–0.2 - 7.5	0.7 - 4	-	-	Aut.	-		060-114166[1])[3])	-	-
Low	KP 1	–0.9 - 7	0.7	-	-	Man.	-		060-110366	060-111166	060-110966
Low	KP 2	–0.2 - 5	0.4 - 1.5	-	-	Aut.	-		060-112066[3])	-	060-112366[3])
High	KP 5	-	-	8 - 32	1.8 - 6.0	-	Aut.		060-117166[3])	060-117966[3])	060-117766[3])
High	KP 5	-	-	8 - 32	3	-	Man.		060-117366	060-118066	060-117866
Dual	KP 15	–0.2 - 7.5	0.7 - 4	8 - 32	4	Aut.	Aut.	SPDT + LP signal	060-124166[3])	060-125466[3])	-
Dual	KP 15	–0.2 - 7.5	0.7 - 4	8 - 32	4	Aut.	Man.		060-124366	-	-
Dual	KP 15	–0.2 - 7.5	0.7 - 4	8 - 32	4	Aut.	Man.		060-114866[1])	-	-
Dual	KP 15	–0.9 - 7	0.7	8 - 32	4	Man.	Man.		060-124566	-	-
Dual	KP 15	–0.9 - 7	0.7	8 - 32	4	Conv.[2])	Conv.[2])		060-126166	-	-
Dual	KP 15	–0.2 - 7.5	0.7 - 4	8 - 32	4	Aut.	Aut.	SPDT + LP and HP signal	060-126566[3])	060-129966[3])	-
Dual	KP 15	–0.2 - 7.5	0.7 - 4	8 - 32	4	Aut.	Man.		060-126466	060-128466	-
Dual	KP 15	–0.2 - 7.5	0.7 - 4	8 - 32	4	Conv.[2])	Conv.[2])		060-115466[3])	060-001066[3])	-
Dual	KP 15	–0.9 - 7	0.7	8 - 32	4	Conv.[2])	Conv.[2])		060-122066	-	-

For fluorinated refrigerants and R 717 (NH_3)

Pressure	Type	Low pressure (LP)		High pressure (HP)		Reset	Contact system	Code no.	
		Regulating range bar	Differential Δp bar	Regulating range bar	Differential Δp bar	LP/HP		M10 × 0.75	1 m cap. tube with M10 × 0.75
Low	KP 1A	–0.2 → 7.5	0.7 → 4.0			Aut.	SPDT	**060-116266**	**060-116066**[3])
Low	KP 1A	–0.9 → 7.0	Fixed 0.7			Man.			**060-116166**
High	KP 5A			8 → 32	1.8 → 6.0	Aut.			**060-123066**[3])
High	KP 5A			8 → 32	Fixed 3	Man.		**060-115366**	**060-123166**
Dual	KP 15A	–0.2 → 7.5	0.7 → 4.0	8 → 32	Fixed 4	Aut./Aut.	SPDT + LP and HP signal	**060-129566**	**060-129366**[3])
Dual	KP 15A	–0.2 → 7.5	0.7 → 4.0	8 → 32	Fixed 4	Aut./Man.		**060-129666**	**060-129466**
Dual	KP 15A	–0.9 → 7.0	Fixed 0.7	8 → 32	Fixed 4	Conv./Conv.[2])	SPDT LP signal		**060-128366**
High	KP 7ABS			8 → 32	Fixed 4	Man./Man.	SPST		**060-120566**

[1]) Pressure controls with gold-plated contacts
[2]) Convertible reset: optional automatic or manual reset
[3]) Enclosure IP44

Temperature controls

A
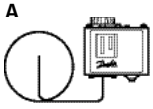
B

C

D
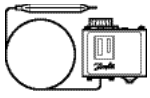
E
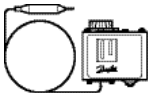
F
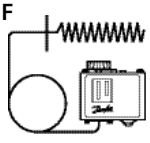

Charge	Type	Sensor type	Setting - range [°C]	Differential Δt Lowest temperature [°C]	Differential Δt Highest temperature [°C]	Reset	Max. Sensor temp. [°C]	Capillary-tube length [m]	Code no.
Vapour [1]	KP 61	A	–30 - 15	5.5 - 23	1.5 - 7	aut.	120	2	060L110066
	KP 61	A	–30 - 15	5.5 - 23	1.5 - 7	aut.	120	5	060L110166
	KP 61	B	–30 - 13	4.5 - 23	1.2 - 7	aut.	120	2	060L110266
	KP 61	B	–30 - 15	5.5 - 23	1.5 - 7	aut.	120	2	060L110366 [3])
	KP 61	B	–30 - 15	5.5 - 23	1.5 - 7	aut.	120	2	060L112866[3]) [4])
	KP 61	A	–30 - 15	6	2	min.	120	5	060L110466
	KP 61	B	–30 - 15	6	2	min.	120	2	060L110566
	KP 62	C 1	–30 - 15	6 - 23	1.5 - 7	aut.	120	-	060L110666
	KP 63	A	–50 - –10	10 - 70	2.7 - 8	aut.	120	2	060L110766
	KP 63	B	–50 - –10	10 - 70	2.7 - 8	aut.	120	2	060L110866
	KP 68	C 1	–5 - 35	4.5 - 25	1.8 - 7	aut.	120	-	060L111166
	KP 69	B	–5 - 35	4.5 - 25	1.8 - 7	aut.	120	2	060L111266
Adsorb-tion [2])	KP 62	C 2	–30 - 15	5 - 20	2 - 8	aut.	80	-	060L111066[3]) [4])
	KP 71	E 2	–5 - 20	3 - 10	2.2 - 9	aut.	80	2	060L111366
	KP 71	E 2	–5 - 20	3	3	min.	80	2	060L111566
	KP 73	E 1	–25 - 15	12 - 70	8 - 25	aut.	80	2	060L111766
	KP 73	D 1	–25 - 15	4 - 10	3.5 - 9	aut.	80	2	060L111866 [3])
	KP 73	D 1	–25 - 15	3.5	3.5	min.	80	2	060L113866
	KP 73	D 2	–20 - 15	4 - 15	2 - 13	aut.	55	3	060L114066
	KP 73	D 1	–25 - 15	3.5 - 20	3.25 - 18	aut.	80	2	060L114366
	KP 75	F	0 - 35	3.5 - 16	2.5 - 12	aut.	110	2	060L112066
	KP 75	E 2	0 - 35	3.5 - 16	2.5 - 12	aut.	110	2	060L113766
	KP 77	E 3	20 - 60	3.5 - 10	3.5 - 10	aut.	130	2	060L112166
	KP 77	E 3	20 - 60	3.5 - 10	3.5 - 10	aut.	130	3	060L112266
	KP 77	E 2	20 - 60	3.5 - 10	3.5 - 10	aut.	130	5	060L116866
	KP 79	E 3	50 - 100	5 - 15	5 - 15	aut.	150	2	060L112666
	KP 81	E 3	80 - 150	7 - 20	7 - 20	aut.	200	2	060L112566
	KP 81	E 3	80 - 150	9	9	max.	200	2	060L115566
	KP 98	E 2	OIL: 60 - 120	OIL: 14	OIL: 14	max.	150	1	060L113166
		E 2	HT: 100 - 180	HT: 25	HT: 25	max.	250	2	

1) Sensor must always be placed colder than the temperature control housing and capillary tube. The temperature control will then regulate independent of ambient temperature.
2) Sensor can be placed warmer or colder than temperature control housing and capillary tube, but variations from +20°C ambient temperature will influence the scale accuracy.
3) With manual switch, not isolating switch.
4) Panel mounting model with top plate.

ACB – Cartridge pressure controls

The ACB series cartridge switches, are small disc type pressure controls manufactured by Danfoss Saginomiya in Poland. The core steps of the manufacturing process of these controls are carried out using precision manufacturing techniques, and within a clean-room environment. This ensures that product specifications can be guaranteed over a longer period, providing reliable performance during the whole product lifetime.

Features

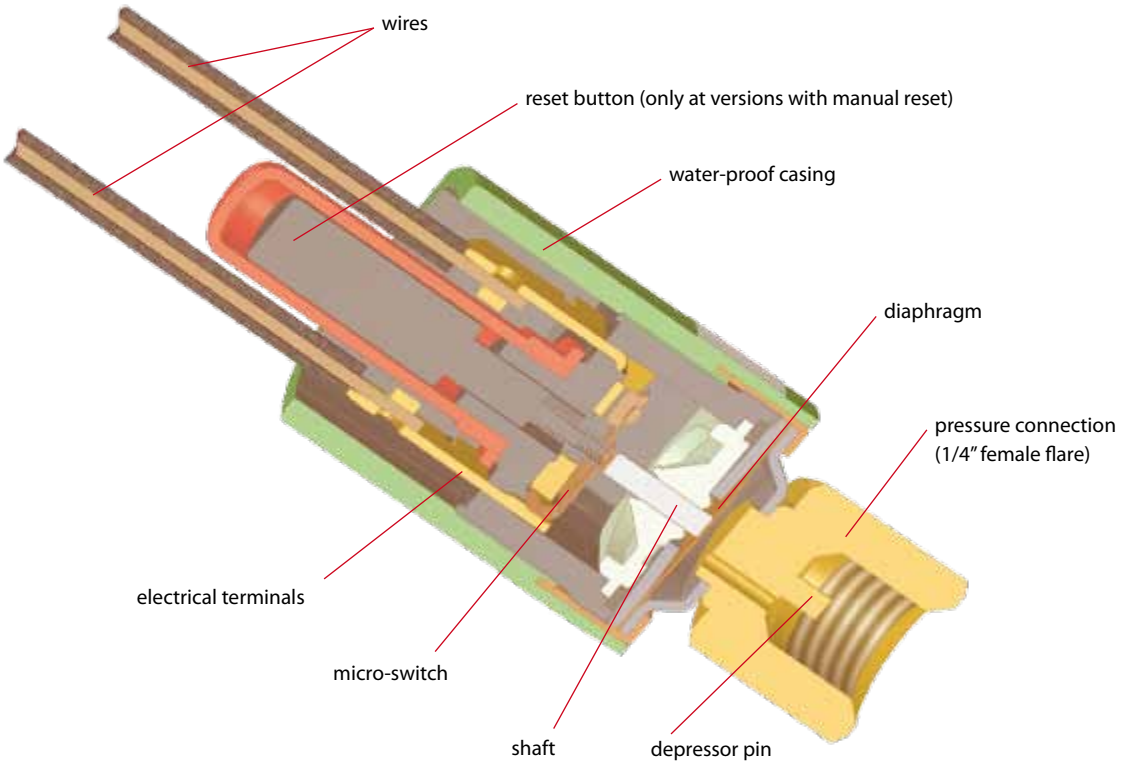

Fig.: type SPST manual reset

Applications	Advantages	Facts
· Traditional refrigeration · Heat pump systems · Air conditioning units · Liquid coolers · Transport refrigeration	· Compact and easy to install · Excellent reliability and repeatability · Wide choice of specifications: set-point, pressure connection, electrical connection · Flexible order quantity due to Euro-pean production with short lead times · Global coverage and widespread use at all major OEMs · Over 100 million pcs installed in the field	· CE, TÜV, VDE, UL and C-UL approvals (SPDT man. only CE appovals) · Contact load up to 6 A (250 V AC) · Normally Closed (NC), Normally Open (NO) or SPDT contact system · Spades or cables (1.5 m cable for standard program) · Pressure range from - 0.50 bar to 45 bar · Automatic or manual reset · IP65 (water proof version with cables) and IP40 (version with spade connec-tors) available

Technical data and ordering

Application	Reset	Cut out	Cut in	Contact system/ enclosure type: W-water-proof [1] S-with spades [2]	Connection		
					Solder		1/4" female flare
		bar	bar		6 mm	1/4"	
High pressure cut-out	automatic	18 ± 0.7	13 ± 1.2	SPST-NC / W	061F7504	061F7505	061F7506
				SPST-NC / S	-	061F8711	061F8709
				SPDT / W	-	-	061F9057
	automatic	20 ± 1.0	16 ± 1.5	SPST-NC / S	-	061F8710	061F8708
	automatic	23 ± 1.0	19 ± 1.5	SPST-NC / S	-	061F8707	061F8703
	automatic	23 ± 0.7	19 ± 1.2	SPST-NC / W	-	-	061F8494
				SPDT / W	-	-	061F9056
	manual			SPDT / W	-	-	061F9243
	automatic	26 ± 1.0	20 ± 1.5	SPST-NC / W	061F7507	061F7508	061F7509
				SPST-NC / S	-	061F8705	061F8701
	automatic			SPDT / S	-	061F9104	061F9100
				SPDT / W	-	-	061F9055
	manual	26 ± 1.0	20 ± 2.0	SPST-NC / W	061F9703	061F9714	061F9713
	automatic	28 ± 1.0	21 ± 1.5	SPST-NC / W	061F7510	061F7513	061F7514
	automatic			SPST-NC / S	-	061F8704	061F8700
	automatic			SPDT / W	-	-	061F9054
				SPDT / S	-	061F9107	061F9103
	manual			SPDT / W	-	-	061F9242
	manual	28 ± 1.0	21 ± 2.0	SPST-NC / W	-	-	061F9522
	automatic	31 ± 1.0	24 ± 1.5	SPST-NC / W	061F8493	-	061F8492
				SPST-NC / S	-	061F8706	061F8702
				SPDT / W	-	-	061F9053
	automatic	42 ± 1.2	33 ± 2.0	SPST-NC / W	061F7515	061F7516	061F7517
	manual			SPST-NC / W	-	-	061F9575
	automatic			SPDT / W	-	-	061F9052
Low pressure cut-out	automatic	0.5 ± 0.4	1.5 ± 0.3	SPST-NO / W	061F7518	061F7519	061F7520
		0.5 ± 0.5	1.5 ± 0.5	SPST-NO / S	-	061F7402	061F7400
				SPDT / S	-	061F9106	061F9102
	automatic	0.7 ± 0.5	1.7 ± 0.4	SPST-NO / W	061F7521	061F7522	061F7523
				SPDT / W	-	-	061F9058
		0.7 ± 0.5	1.7 ± 0.5	SPST-NO / S	-	061F7403	061F7401
				SPDT / S	-	061F9105	061F9101
	automatic	1.7 ± 0.5	2.7 ± 0.4	SPST-NO / W	061F7524	061F7525	061F7526
Fan Control	automatic	8.5 ± 1.2	11 ± 0.8	SPST-NO / W	061F8491	-	061F8490
		13 ± 1.5	16 ± 1.0	SPST-NO / W	061F8334	-	061F8333

[1] Waterproof models (IP65) with 1.5 m wires AWG18. packed per 20 pcs
[2] Models with spade connectors (IP40). packed per 50 pcs

UT – Temperature controls

The UT temperature control is a temperature controlled electric switch with stainless steel 18/8 or copper capillary and sensor.
The temperature can be set easily and accurately using the large knob on the front of the temperature control. The temperature must be set to correspond to the required mean temperature.

Features

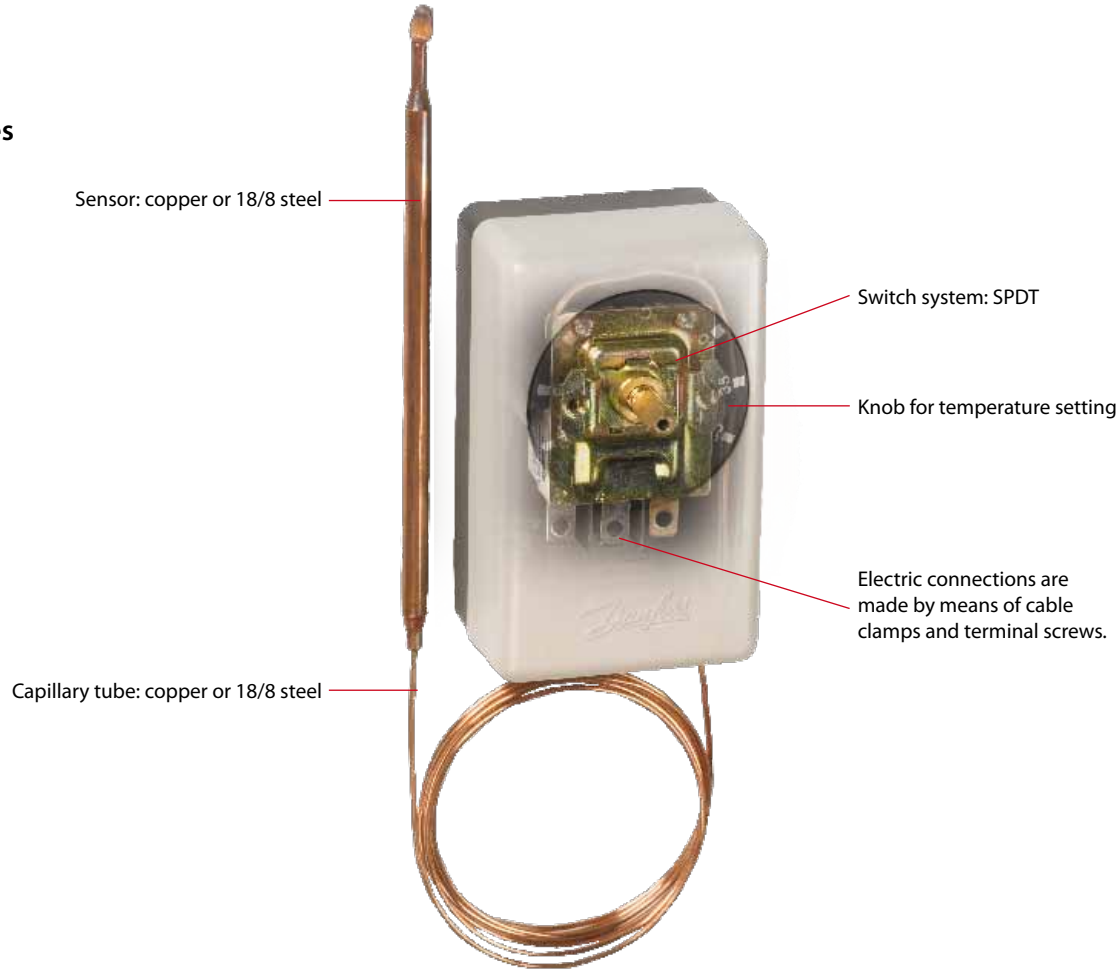

Applications	Advantages	Facts
· Cold rooms · Beverage coolers · Ice cream makers · Milk coolers · Air-conditioning plant · Heat recovery systems	· UT is available for wall or panel mounting · UT for wall mounting: IP20 to EN 60529/IEC 52 · UT for panel mounting: IP00 to EN 60529/IEC 529	· UT 72 for universal purposes: -30 - 30°C · UT 73 for frost protection: 0 - 40°C · Differential is fixed 2.3 °C · Automatic reset · Contact load: - AC 1: 10 A, 250/380 V - AC 15: 2.5 A, 250/380 V

Technical data and ordering

Version	Type	Range [°C]	Differential [°C]	Reset	Max. sensor temperature [°C]	Capillary tube length [m]	Qty. [pcs]	Code no.	
								Copper	18/8 steel
Wall mounting	UT 72	–30 - 30	2.3	aut.	60	1.5	1	060H1101	060H1106
	UT 72	–30 - 30	2.3	aut.	60	1.5	1	060H1103[1)]	-
	UT 72	–30 - 30	2.3	aut.	60	1.5	20	060H1104	-
	UT 72	–30 - 30	2.3	aut.	60	3.0	1	060H1105	-
	UT 73	0 - 40	2.3	aut.	90	1.5	1	060H1102	-
Panel mounting	UT 72	–30 - 30	2.3	aut.	60	1.5	48	060H1201	-
	UT 72	–30 - 30	2.3	aut.	60	3.0	48	060H1205	-
	UT 73	0 - 40	2.3	aut.	90	1.5	48	060H1202	-

[1)] Incl. bulb clamps

Accessories

	Industrial pack Qty. [pcs]	UT 72	UT 73
Setting knob	48	060-1067	060-1096
Bulb clamp	36	060-1090	060-1090

RT – Pressure controls and temperature controls

The RT series includes temperature controls and pressure controls for general applications within industrial and marine refrigeration. An RT temperature controls is fitted with a single-pole changeover switch. The position of the contacts depends on the sensor temperature and the set scale value. An RT pressure control contains a pressure operated single-pole changeover contact, the position of which depends on the pressure in the inlet connection and the set scale value.

Features

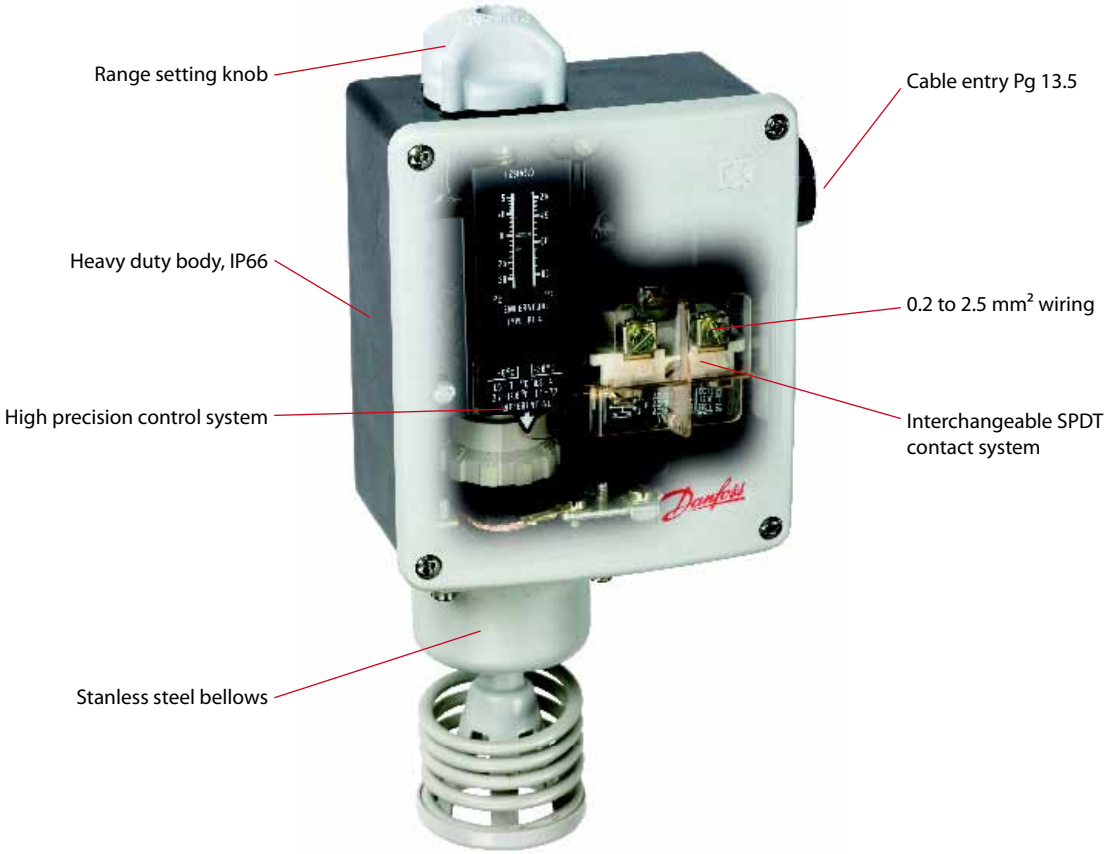

Applications	Advantages	Facts
· General applications within industrial and marine refrigeration	· Wide regulating range · Suitable for alternating and direct current · Interchangeable contact system · Special versions with gold plated contact surfaces for PLC applications · Versions for neutral zone regulation · Waterproof versions, enclosure IP66 · High stability and accuracy · Long operating life time	· Enclosure: IP66 to EN 60529 / IEC 60529, except for versions with ext. reset which are to IP54 · Insulation 400 V · Ambient temperature: −50 - 70 °C for housing · Cable connection: Pg 13.5. · Cable diameter: 6 → 14 mm. · Pressure controls for fluorinated refrigerants and R717 (NH_3)

Technical data and ordering: RT temperature controls

Charge type	Type	Sensortype	Regulation range [°C]	Differential Δ t		Reset	Max. sensor temp. [°C]	Capillary tube length [m]	Code no.
				Lowest temp. setting [°C]	Highest temp. setting [°C]				
State Vapour [1]	RT 10	A	-60 – -25	1.7 – 7	1 – 3	aut.	150	2	017-507766
	RT 9	A	-45 – -15	2.2 – 10	1 – 4.5	aut.	150	2	017-506666
	RT 3	A	-25 – +15	2.8 – 10	1 – 4	aut.	150	2	017-501466
	RT 17	B	-50 – -15	2.2 – 7	1.5 – 5	aut.	100	-	017-511766
	RT 11	B	-30 – 0	1.5 – 6	1 – 3	aut.	66	-	017-508366
	RT 4	B	-5 – +30	1.5 – 7	1.2 – 4	aut.	75	-	017-503666 017-503766[4]
	RT 13	A	-30 – 0	1.5 – 6	1 – 3	aut.	150	2	017-509766
Adsorption [2]	RT 2	A	-25 – +15	5 – 18	6 – 20	aut.	150	2	017-500866
	RT 8	A	-20 – +12	1.5 – 7	1.5 – 7	aut.	145	2	017-506366
	RT 12	A	-5 – +10	1 – 3.5	1 – 3	aut.	65	2	017-508966
	RT 23	A	+5 – +22	1.1 – 3	1 – 3	aut.	85	2	017-527866
	RT 15	A	+8 – +32	1.6 – 8	1.6 – 8	aut.	150	2	017-511566
	RT 24	A	+15 – +34	1.4 – 4	1.4 – 3.5	aut.	105	2	017-528566
	RT 140	C	+15 – +45	1.8 – 8	2.5 – 11	aut.	240	2	017-523666
	RT 102	D	+25 – +90	2.4 – 10	3.5 – 20	aut.	300	2	017-514766
	RT 34	B	-25 – +15	2 – 10	2 – 12	aut.	100	-	017-511866
	RT 7	A	-25 – +15	2 – 10	2.5 – 14	aut.	150	2	017-505366
	RT 14	A	-5 – +30	2 – 8	2 – 10	aut.	150	2	017-509966
	RT 101	A	+25 – +90	2.4 – 10	3.5 – 20	aut.	300	2	017-500366
Partial [3]	RT 107	A	+70 –150	6 – 25	1.8 – 8	aut.	215	2	017-513566

[1] The sensor must be located colder than temperature control housing and capillary tube.
[2] The sensor can be located warmer or colder than temperature control housing.
[3] The sensor must be located warmer than temperature control housing and capillary tube.
[4] With built-in heating coil - reduces the thermal differential.

Temperature controls with adjustable neutral zone

Charge	Type	Sensor type	Regulation range [°C]	Differential [°C]	Differential Δt		Max. sensor temp. [°C]	Capillary tube length [m]	Code no.
					Lowest temp. setting [°C]	Highest temp. setting [°C]			
Vapour	RT 16L	B	0 - +38	1.5 / 0.7	1.5 - 5	0.7 - 1.9	100	-	017L002466
Adsorption	RT 8L	A	-20 - +12	1.5	1.5 - 4.4	1.5 - 4.9	145	2	017L003066
	RT 14L	A	-5 - +30	1.5	1.5 - 5	1.5 - 5	150	2	017L003466
	RT 140L	C	+15 - +45	1.8 / 2	1.8 - 4.5	2.0 - 5	240	2	017L003166
	RT 101L	A	+25 - +90	2.5 / 3.5	2.5 - 7	3.5 - 12.5	300	2	017L006266

Type of sensor

A	B	C	D
	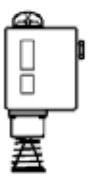	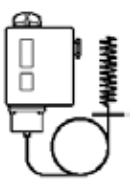	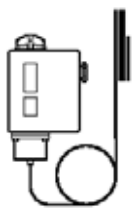
Cylindrical remote sensor	Room sensor	Duct sensor	Capillary tube sensor

Overview RT temperature controls

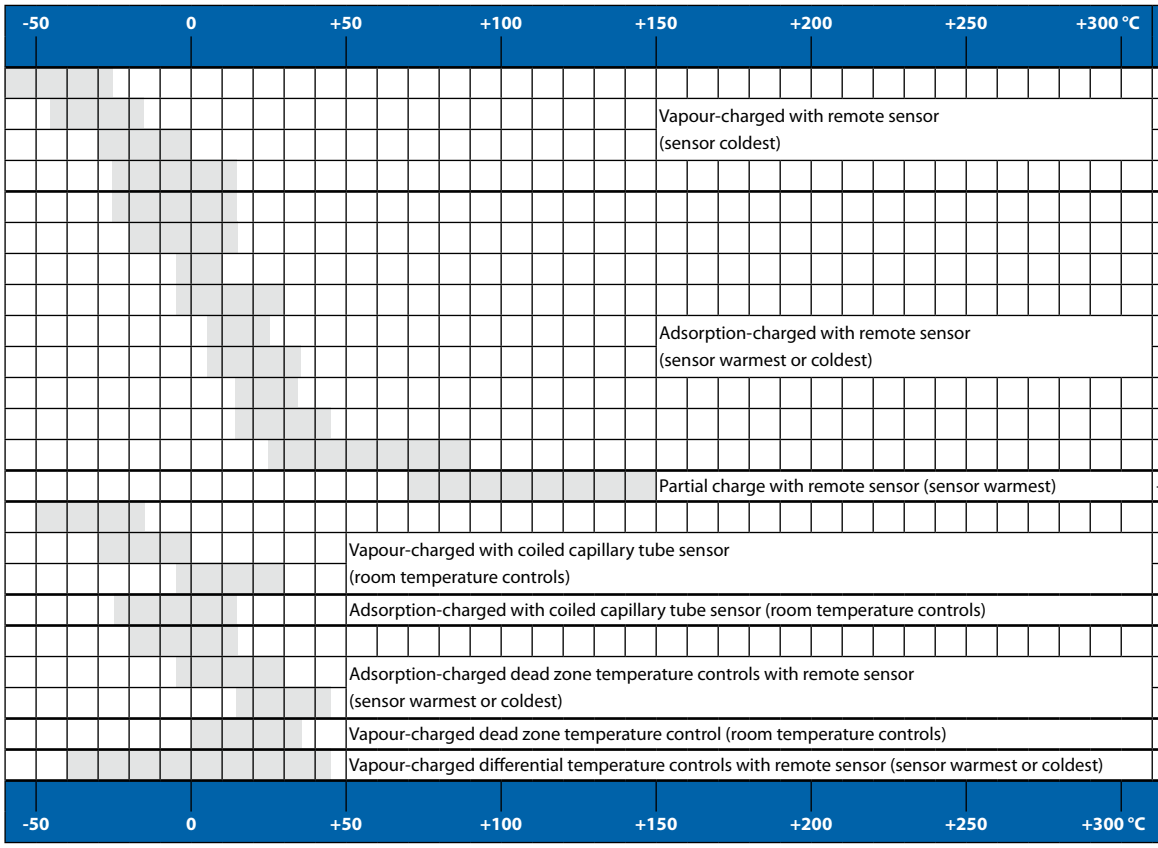

Range °C	Type
-60 → -25	RT 10
-45 → -15	RT 9
-30 → 0	RT 13
-25 → +15	RT 3
-25 → +15	RT 2, 7
-20 → +12	RT 8
-5 → +10	RT 12
-5 → +30	RT 14
+5 → +22	RT 23
+8 → +32	RT 15
+15 → +34	RT 24
+15 → +45	RT 140
+25 → +90	RT 101, 102
+70 → +150	RT 107
-50 → -15	RT 17
-30 → 0	RT 11
-5 → +30	RT 4
-25 → +15	RT 34
-20 → +12	RT 8L
-5 → +30	RT 14L
+15 → +45	RT 140L
0 → +38	RT 16L
-30 → +40	RT 270

Technical data and ordering: RT pressure controls

Safety pressure controls with EN 12263 / DIN 32733 appr. and CE marked according to PED, Pressure Equipment Directive

Pressure	Type	Regulation range [bar]	Differential (fixed) Δp [bar]	Reset	Max. working pressure [bar]	Max. test pressure [bar]	Code no. Connection 1/4 in. 6 mm flare	cutting ring ∅ 6 mm	G 3/8 A [1] + weld nipple ∅ 6.5/10 mm	G 1/2 A [1]
High	RT 36B[2]	0 – 2.5	0.2	man.	22	25	017-525866	-	-	-
	RT 36S[2]	0 – 2.5	0.2	man.	22	25	017-525966	-	-	-
High	RT 6W[2]	5 – 25	3	aut.	34	38	017-503166	-	-	-
	RT 6B[2]	10 – 28	1	man.	34	38	017-503466	-	-	-
	RT 6S[2]	10 – 28	1	man.	34	38	017-507566	-	-	-
High	RT30AW[3]	1 – 10	0.8	aut.	22	25	-	-	-	017-518766
	RT30AB[3]	1 – 10	0.4	man.	22	25	-	-	-	017-518866
	RT30AS[3]	1 – 10	0.4	man.	22	25	-	-	-	017-518966
High	RT6AW[3]	5 – 25	3	aut.	34	38	-	017-513166	017-503266	-
	RT6AB[3]	10 – 28	1.5	man.	34	38	-	017-513366	017-503566	-
	RT6AS[3]	10 – 28	1.5	man.	34	38	-	017-514666	017-507666	-

[1] G ext. thread, ISO 228-1.
[2] Pressure controls for fluorinated refrigerants.
[3] Pressure controls for R 717 (NH_3) and fluorinated refrigerants.

Technical data and ordering: RT pressure controls

Pressure controls for flourinated refrigerants

Pressure	Type	Regulation range [bar]	Differential Δp [bar]	Reset	Max. working pressure [bar]	Max. test pressure [bar]	Code no.	
							Connection	
							1/4 in. 6 mm flare	G 3/8 A [1]
Low	RT 1	-0.8 – 5	0.5 – 1.6	aut.	22	25	017-524566	-
	RT 1	-0.8 – 5	0.5	man.	22	25	017-524666	-
	RT 200	0.2 – 6	0.25 – 1.2	aut.	22	25	-	017-523766
High	RT 117L	10 – 30	1 – 4	aut.	42	47	-	017-529566

[1] G ext. thread, ISO 228-1.

Safety – Pressure controls for R717 (NH_3) and flourinated refrigerants

Pressure	Type	Regulation range [bar]	Differential Δp [bar]	Reset	Max. working pressure [bar]	Max. test pressure [bar]	Code no.	
							Connection	
							1/4 in. 6 mm flare	G 3/8 A [1]
Low	RT 1A	-0.8 – 5	0.5 – 1.6	aut.	22	25	017-501966	017-500166
		-0.8 – 5	0.5	man.	22	25	017-502766	017-500266
		-0.8 – 5	1.3 – 2.4	aut.	22	25	-	017-500766
High	RT 5A	4 – 17	1.2 – 4	aut.	22	25	017-505266	017-504666
		4 – 17	1.2	man.	22	25	017-506166	017-504766

[1] G ext. thread, ISO 228-1.

Pressure controls with adjustable neutral zone for R717 (NH_3) and fluorinated refrigerants

Pressure	Type	Regulation range [bar]	Differential Δp [bar]	Neutral zone Δp [bar]	Max. working pressure [bar]	Max. test pressure [bar]	Code no.	
							Connection	
							cutting ring ∅ 6 mm	G 3/8 A [1] + weld nipple ∅ 6.5/10 mm
Low	RT 1AL[2]	-0.8 – 5	0.2	0.2 – 0.9	22	25	017L001666	017L003366
	RT 200L[3]	0.2 – 6	0.25	0.25 – 0.7	22	25	-	017L003266
High	RT 5AL[2]	4 – 17	0.35	0.35 – 1.4	22	25	017L001766[4]	017L004066[4]
	RT 117L[3]	10 – 30	1	1 – 3	42	47	-	017L004266[4]

[1] G ext. thread, ISO 228-1.
[2] Pressure controls for R 717 (NH_3) and fluorinated refrigerants.
[3] Pressure controls for fluorinated refrigerants.
[4] Without nipple.

Differential pressure controls for R 717(NH_3) and fluorinated refrigerants

Type	Regulation range [bar]	Differential Δp [bar]	Operating range for LP bellows [bar]	Max. working pressure [bar]	Max. test pressure [bar]	Code no.	
						Connection	
						cutting ring ∅ 6 mm	G 3/8 A [1] + weld nipple ∅ 6.5/10 mm
RT 260A	0.5 – 4	0.3	-1 – 18	22	25	017D001466	017D002166
	0.5 – 4	0.3	-1 – 18	22	25	-	017D002266[2]
	0.5 – 6	0.5	-1 – 36	42	47	017D001566	017D002366
	1.5 – 11	0.5	-1 – 31	42	47	017D001666	017D002466
RT 252A	0.1 – 1.5	0.1	-1 – 9	22	13	017D001366	017D002566
RT 265[3]	1 – 6	0.5	-1 – 36	42	47	-	017D007266

[1] G ext. thread, ISO 228-1.
[2] Man. reset.
[3] Filter monitor: Alarm Δp = 0.8 bar, cut-out Δp = 1 bar (factory setting).

Differential pressure controls with adjustable neutral zone for R 717(NH_3) and fluorinated refrigerants

Type	Regulation range [bar]	Differential Δ p [bar]	Neutral zone [bar]	Operating range for LP bellows [bar]	Max. working pressure [bar]	Max. test pressure [bar]	Code no.
							Connection
							G 1/2 A [1] + weld nipple ∅ 6.5/10 mm
RT 262 AL	0.1 – 1.5	0.1	-1 – 0.33	-1 – 9	11	13	017D004366[2]

[1] G ext. thread, ISO 228-1.
[2] Differential pressure control for R 717 (NH_3) and fluorinated refrigerants.

MP – Differential pressure controls

MP 54 and MP 55 oil differential pressure controls are used as safety switches to protect refrigeration compressors against low lubricating oil pressure. If the oil pressure fails the oil differential pressure control stops the compressor after a certain time period. MP 54 and 55 are used in refrigerating systems using fluorinated refrigerants. MP 55A is used in refrigerating systems with R717 (NH_3). MP 55A can also be used in systems with fluorinated refrigerant. MP 54 has a fixed differential pressure setting. It also incorporates a thermal time relay with a fixed release time setting. MP 55 and 55A have adjustable differential pressure and are available both with and without thermal time relay.

Features

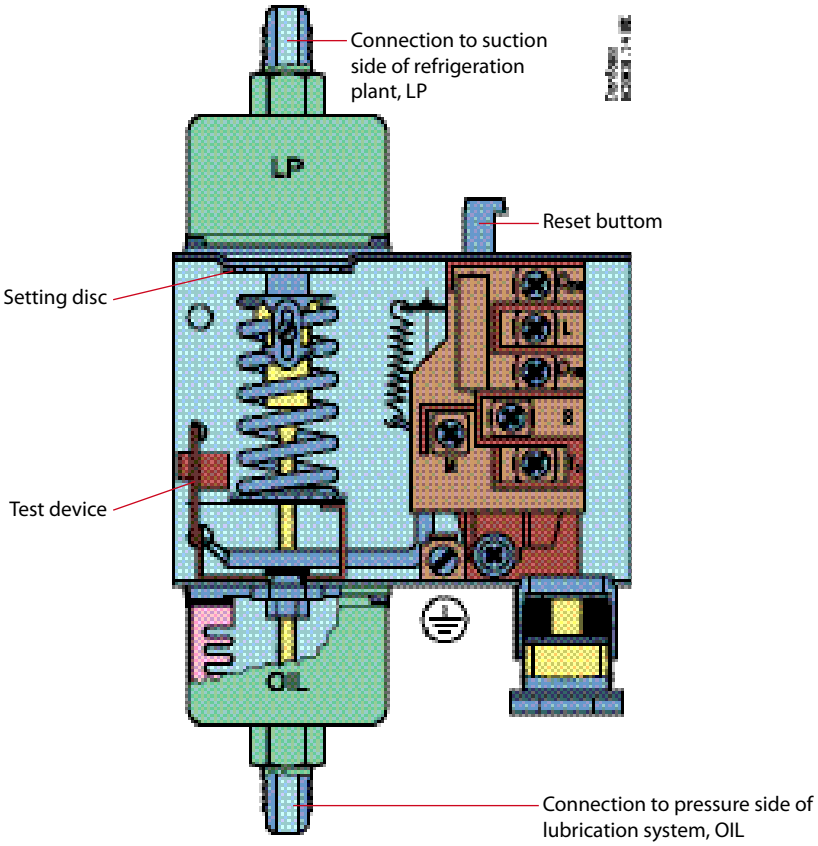

Applications	Advantages	Facts
· Deep freeze, refrigeration and air conditioning plant	· Suitable for both alternating and direct current · Small contact differential · Can be used for all normal fluorinated refrigerants	· Meets the requirements of EN 60947 · Wide regulating range · Screwed cable entry for cables from 6 to 14 mm diameter · Electrical connection at the front of the unit · Small contact differential

Technical data and ordering

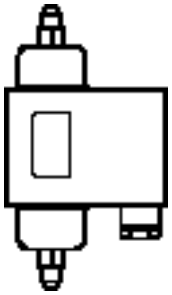

For fluorinated refrigerants

Type	Differential Δp [bar]	Switch differential max. Δp [bar]	Operation range, LP side [bar]	Time relay release time [s]	Contact load	Code no.	
						Connection	
						1/4 in. 6 mm flare	1 m cap.tube 1/4 in. ODF solder
MP 54	0.65	0.2	–1 - 12	0 [2]	B	060B029766	-
	0.65	0.2	–1 - 12	45	A	060B016666	-
	0.9	0.2	–1 - 12	60	A	060B016766	-
	0.65	0.2	–1 - 12	90	A	060B016866	-
	0.65	0.2	–1 - 12	120	A	060B016966	-
MP 55	0.3 - 4.5	0.2	–1 - 12	45	A	060B017066	060B013366
	0.3 - 4.5	0.2	–1 - 12	60	A	060B017166	-
	0.3 - 4.5	0.2	–1 - 12	60	A	060B017866 [1]	-
	0.3 - 4.5	0.2	–1 - 12	90	A	060B017266	-
	0.3 - 4.5	0.2	–1 - 12	120	A	060B017366	060B013666
	0.3 - 4.5	0.2	–1 - 12	0 [2]	B	060B029966	-

For fluorinated refrigerants and R717 (NH_3)

Type	Differential Δp [bar]	Switch differential max. Δp [bar]	Operation range, LP side [bar]	Time relay release time [s]	Contact load	Code no.	
						Connection	
						∅ 6,5 / ∅ 10 mm weld nipple	Cutting ring 6 mm
MP 55A	0.3 - 4.5	0.2	–1 - 12	45	A	060B017466	060B018266
	0.3 - 4.5	0.2	–1 - 12	60	A	060B017566	060B018366
	0.3 - 4.5	0.2	–1 - 12	60	A	060B017966 [1]	-
	0.3 - 4.5	0.2	–1 - 12	90	A	060B017666	060B018466
	0.3 - 4.5	0.2	–1 - 12	120	A	060B017766	-
	0.3 - 4.5	0.2	–1 → 12	0 [2]	B	060B029866 [2]	060B029666

[1] With operational light that remains on during normal operation.
Note: If the operational light goes out, the compressor should not run longer than the release time.

[2] Versions without time relay are for applications where an external time relay is required - perhaps with a different release time than the one specified.

Contact loads

Type A:
On time relay output contacts M-S:
AC15: 2 A, 250 V
DC13: 0,2 A, 250 V

Type B without time relay:
AC15: 0,1 A, 250 V
DC13: 12 W, 125 V

KVP – Evaporator pressure regulators

The KVP is mounted in the suction line after the evaporator and is maintaining a constant evaporating pressure and thereby a constant surface temperature on the evaporator. The regulation is modulating. By throttling in the suction line, the amount of refrigerant gas is matched to the evaporator load.

Features

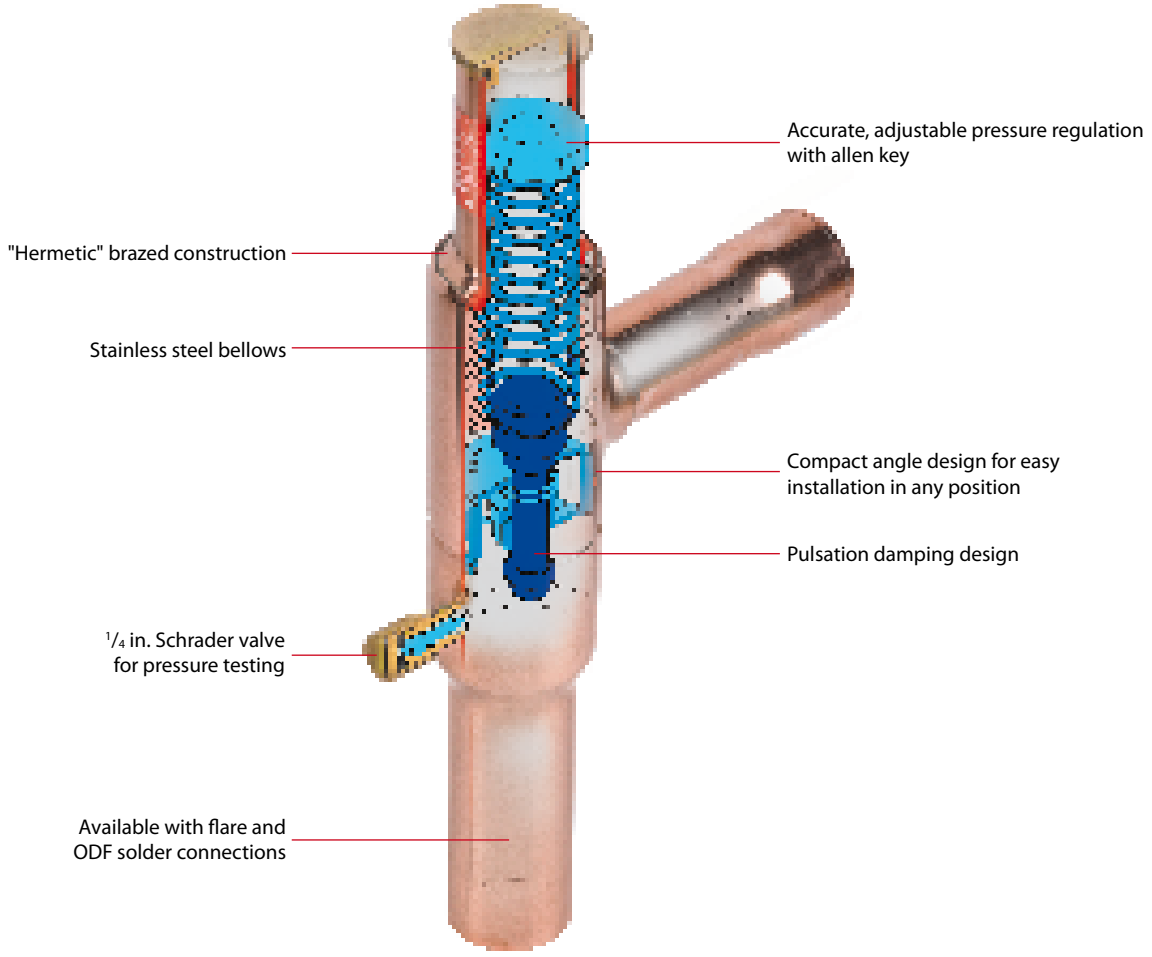

Applications	Advantages	Facts
· Traditional refrigeration · Air conditioning units · Transport refrigeration	· The KVP can be used to differentiate the evaporating pressures in two or more evaporators in systems with one compressor. · Protection against a too low evaporating pressure. The regulator closes when the pressure in the evaporator falls below the set value.	· Wide capacity and operating range · Regulation range: 0 to 5.5 bar · For use with HCFC and HFC refrigerants · Maximum working pressure PS = 18 bar

Technical data and ordering

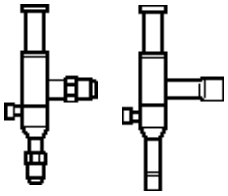

Evaporator pressure regulator

Type	Rated capacity in kW [1]				Flare connection [2] [3]		Code no. [4]	Solder, ODF connection [3]		Code no.
	R22	R134a	R404A/R507	R407C	in.	mm		in.	mm	
KVP 12	4.0	2.8	3.6	3.7	½	12	034L0021	½	-	034L0023
					-	-	-	-	12	034L0028
KVP 15	4.0	2.8	3.6	3.7	⅝	16	034L0022	⅝	16	034L0029
KVP 22	4.0	2.8	3.6	3.7	-	-	-	⅞	22	034L0025
KVP 28	8.6	6.1	7.7	7.9	-	-	-	1⅛		034L0026
					-	-	-	-	28	034L0031
KVP 35	8.6	6.1	7.7	7.9	-	-	-	1⅜	35	034L0032

[1] Rated capacity is the capacity of the regulator at
– Evaporating temperature t_e = –10 °C,
– Condensing temperature t_c = +25 °C
– Pressure drop in regulator Δp = 0.2 bar, offset = 0.6 bar

[2] Supplied without flare nuts. Separate flare nuts can be supplied: ½ in./12 mm, code no. **011L1103**, ⅝ in./16 mm, code no. **011L1167**.

[3] The connection dimensions chosen must not be too small, since gas velocities in excess of 40 m/s at the inlet of the regulator can give flow noise.

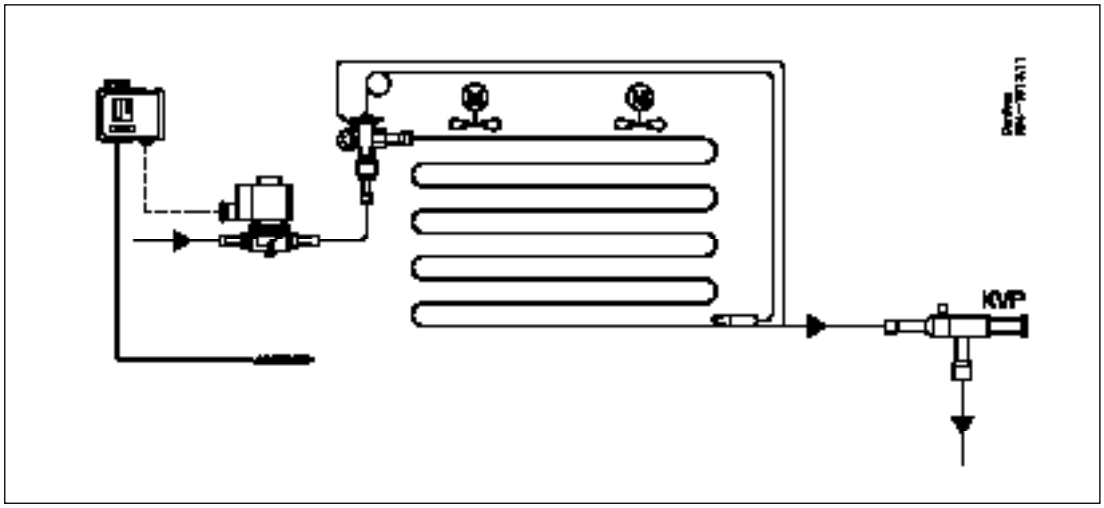

KVR/NRD – Condensing pressure regulators

Regulator system KVR and NRD is used to maintain a constant and sufficiently high condenser and receiver pressure in refrigeration and air conditioning plant with air-cooled condensers.
KVR can also be used together with receiver pressure regulator type KVD.

Features

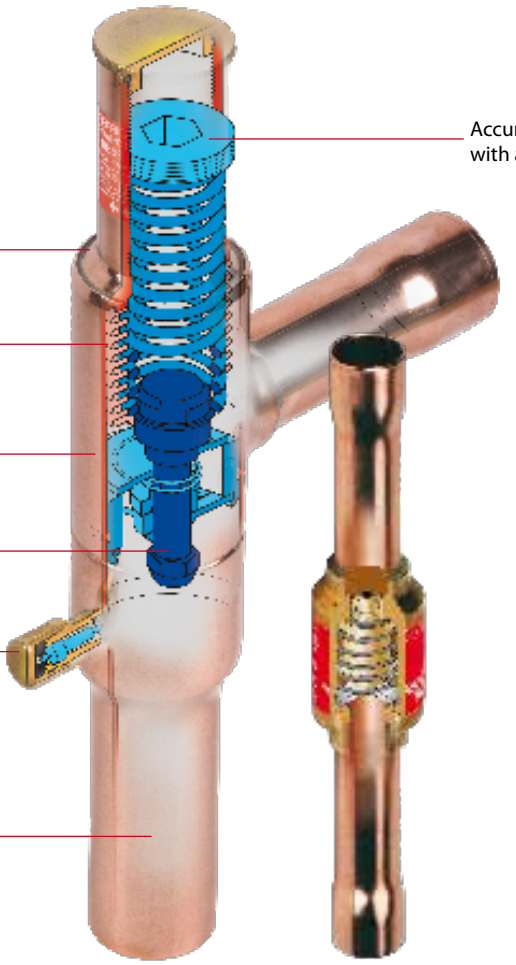

Applications	Advantages	Facts
· Traditional refrigeration · Air conditioning units · Transport refrigeration	· The valves are the most compact on the market. · Excellent performance because of balanced port design (equalization of force on port) · The refrigeration system can operate with very large load variations · Very easy to adjust the KVR · The NRD is non-adjustable – it always follows the actual pressure in the system · Reliable design	· Wide capacity and operating range · Regulation range: 5 to 17.5 bar · For use with HCFC and HFC refrigerants · Maximum working pressure PS = 28 bar

Technical data and ordering

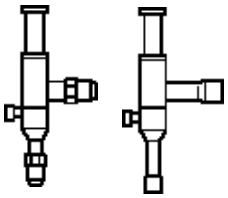

Condensing pressure regulator

Type	Evaporator capacity								Flare connection [2) 3)]		Code no. [4)]	Solder, ODF connection [3)]		Code no.
	Rated liquid capacity in kW [1)]				Rated hot gas capacity in kW [1)]									
	R22	R134a	R404A/ R507	R407C	R22	R134a	R404A/ R507	R407C	in.	mm		in.	mm	
KVR 12	50.4	47.3	36.6	54.4	13.2	11.6	12.0	14.3	½	12	034L0091	½	-	034L0093
									-	-	-	-	12	034L0096
KVR 15									⅝	16	034L0092	⅝	16	034L0097
KVR 22									-	-	-	⅞	22	034L0094
KVR 28	129	121	93.7	139.3	34.9	30.6	34.9	37.7	-	-	-	1⅛	-	034L0095
									-	-	-	-	28	034L0099
KVR 35									-	-	-	1⅜	35	034L0100
NRD												½	-	020-1132
												-	12	020-1136

[1)] Rated capacity is the capacity of the regulator at
- Evaporating temperature t_e = –10 °C,
- Condensing temperature t_c = +30 °C
- Pressure drop in regulator Δp =
  - liquid line dp = 0,2 bar
  - hotgas line dp = 0,4 bar
  - offset = 3 bar

[2)] Supplied without flare nuts. Separate flare nuts can be supplied: ½ in./12 mm, code no. **011L1103**, ⅝ in./16 mm, code no. **011L1167**.

[3)] The connection dimensions chosen must not be too small, since gas velocities in excess of 40 m/s at the inlet of the regulator can give flow noise.

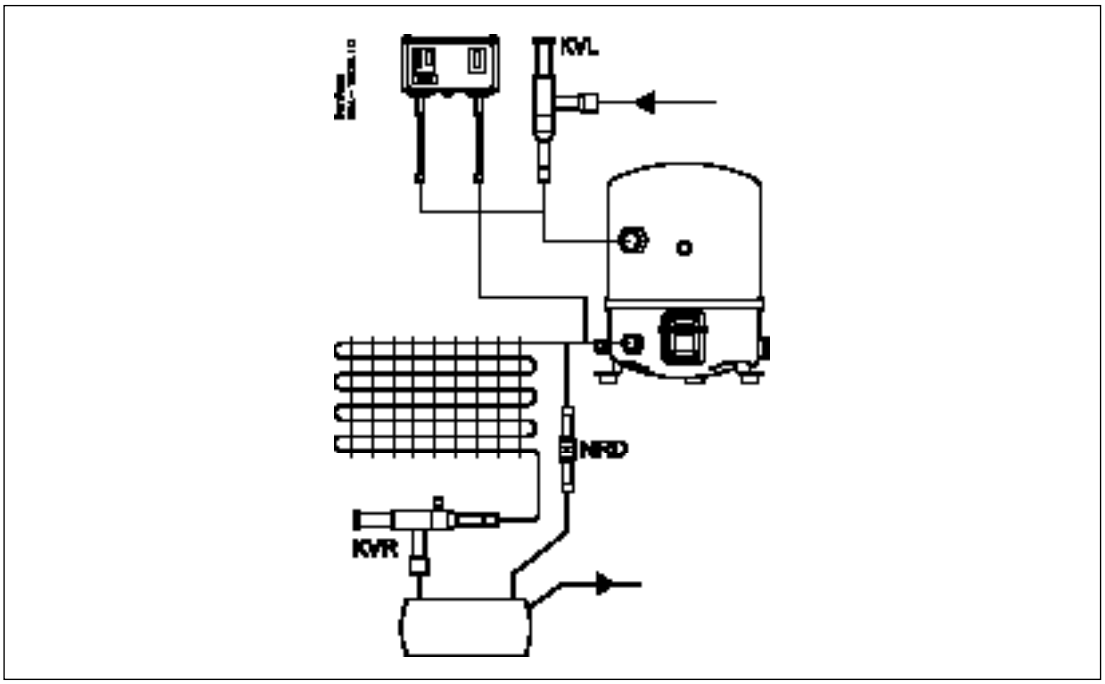

XGE/RGE – Condenser fan speed controls

Fan speed control is becoming increasingly widespread in different refrigeration and air conditioning units, with the benefits of reduced noise and stable condensing pressures under different climatic conditions. The XGE range is very compact and offers the ideal solution for reliable fan control for most units where small fans are used. For medium to large sized fans (single and three phase) the RGE range offers a simple and efficient fan speed control solution.

Features

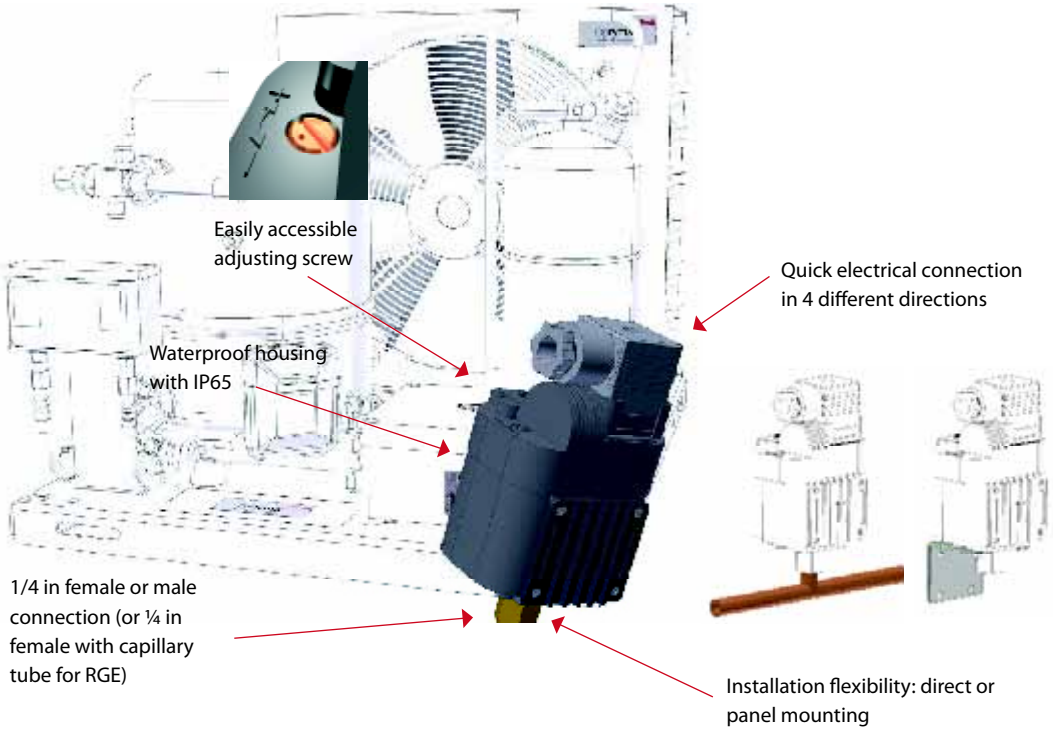

Applications	Advantages	Facts
· Freezing and refrigeration condensing units · Packaged air conditioners and chillers	· Simple to install and easy setting · "All in one": senses pressure and controls fan speed · Reliable sensing mechanism · XGE: - Compact & light weight (length: 112 mm - diameter: 66 mm - weight: 180 g) - Can be directly mounted onto the refrigeration line or fixed onto a simple bracket (accessory) and screwed to a panel - Easily accessible adjusting screw on the top surface - Easy wiring and electrical connection - Specially designed heat dissipation radiator to prevent overheating	· Electrical rating from 3 to 8A (single phase) and 5 to 7A (3 phase) · For all the commonly used refrigerants, including R410A · Enclosure: IP65 (XGE) and IP54 (RGE) · Full CE / EMC approved · Dual frequency: 50/60 Hz · Max. working pressure: 47 bar · With low speed operation it is possible to select either minimum speed operation or cut-off operation

Technical data and ordering

Model	Mode [1]	Pressure connection	Adjusting range [bar]	P-band [bar]	Pre-setting [bar]	Rated motor rating [A]	No. of phase/ voltage [VAC]	Code no.	Box qty
XGE-4C	C	1/4 in female flare	10-25	6	19	0.2-3	1 / 200-240	061H3140	50
XGE-4CB	C	1/4 in male flare	10-25	6	19	0.2-3	1 / 200-240	061H3142	50
XGE-6C	C	1/4 in female flare	22-39	7	28	0.2-3	1 / 200-240	061H3160	50
XGE-6CB	C	1/4 in male flare	22-39	7	28	0.2-3	1 / 200-240	061H3162	50
XGE-4M	M	1/4 in female flare	10-25	6	19	0.2-3	1 / 200-240	061H3240	50
XGE-4MB	M	1/4 in male flare	10-25	6	19	0.2-3	1 / 200-240	061H3242	50
XGE-6M	M	1/4 in female flare	22-39	7	28	0.2-3	1 / 200-240	061H3260	50
RGE-Z1N4-7DS	C or M	1/4 in female flare	8-28	4	19	0.2-4	1 / 200-240	061H3005	20
RGE-Z1N6-7DS	C or M	1/4 in female flare	16-39	8	32	0.2-4	1 / 200-240	061H3021	20
RGE-Z1P4-7DS	C or M	1/4 in female flare	8-28	4	19	0.2-6	1 / 200-240	061H3008	16
RGE-Z1P6-7DS	C or M	1/4 in female flare	16-39	8	32	0.2-6	1 / 200-240	061H3022	16
RGE-Z1Q4-7DS	C or M	1/4 in female flare	8-28	4	19	0.2-8	1 / 200-240	061H3009	16
RGE-Z1Q6-7DS	C or M	1/4 in female flare	16-39	8	32	0.2-8	1 / 200-240	061H3023	16
RGE-Z3R4-7DS	C or M	1/4 in female flare	8-28	4	16	0.2-5	3 / 200-240	061H3003	6
RGE-X3R4-7DS	C or M	1/4 in female flare	8-28	4	16	0.2-5	3 / 380-415	061H3006	6
RGE-X3R6-7DS	C or M	1/4 in female flare	16-39	8	32	0.2-5	3 / 380-415	061H3028	6
RGE-Z3T4-7DS	C or M	1/4 in female flare	8-28	4	16	0.2-7	3 / 200-240	061H3050	6

[1] C = Cut-off, M = Min. speed

Accessories

Model	Description	Dimensions	Code no.	Box qty
XGE-AE01	Fixing bracket accessory for panel mount	H: 38 mm, W: 42 mm, D: 45 mm	061H3102	50

KVL – Crankcase pressure regulators

Crankcase pressure regulator type KVL is fitted into the suction line ahead of the compressor. The KVL protects the compressor motor against overload during start-up after long standstill periods or after defrost periods (high pressure in evaporator).

Features

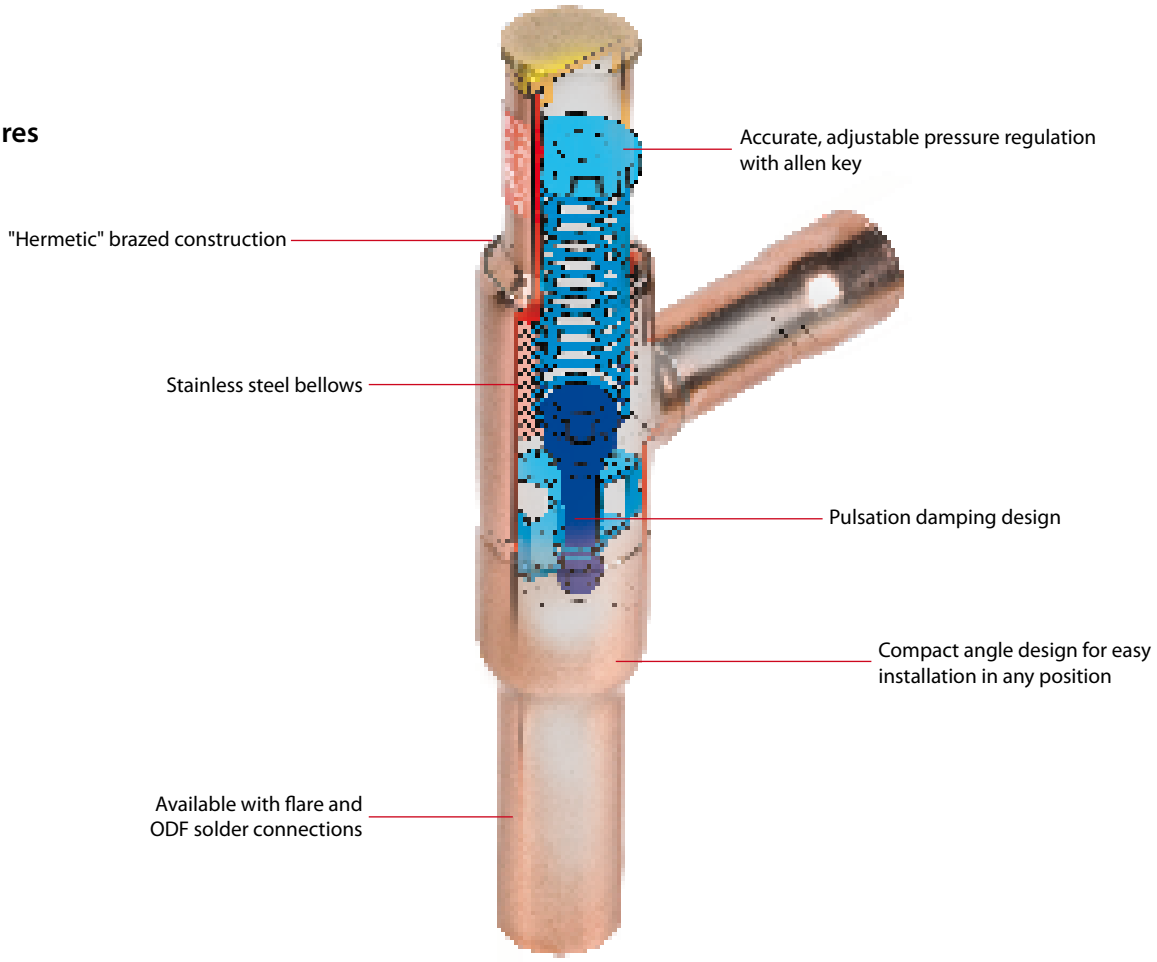

Applications	Advantages	Facts
· Traditional refrigeration · Air conditioning units · Transport refrigeration	· Unaffected by ambient pressure variations · Bellows welded to the body for long lifetime · Accurate, adjustable pressure regulation · Easy adjustment before start up · Protects the compressor against electrical motor overloading	· Wide capacity and operating range · Regulation range: 0.2 to 6 bar · For use with HCFC and HFC refrigerants · Maximum working pressure PS = 18 bar

Technical data and ordering

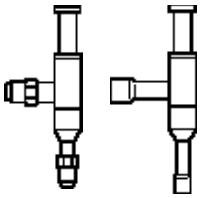

Crankcase pressure regulator

Type	Rated capacity in kW [1]				Flare connection [2] [3]		Code no.	Solder, ODF connection [3]		Code no.
	R22	R134a	R404A/R507	R407C	in.	mm		in.	mm	
KVL 12	7.1	5.3	6.3	6.4	½	12	034L0041	½		034L0043
					-	-	-	-	12	034L0048
KVL 15	7.1	5.3	6.3	6.5	⅝	16	034L0042	⅝	16	034L0049
KVL 22	7.1	5.3	6.3	6.5	-	-	-	⅞	22	034L0045
KVL 28	17.8	13.2	15.9	16.4	-	-	-	1⅛	-	034L0046
					-	-	-	-	28	034L0051
KVL 35	17.8	13.2	15.9	16.4	-	-	-	1⅜	35	034L0052

[1] Rated capacity is the capacity of the regulator at
– Evaporating temperature t_e = –10 °C,
– Condensing temperature t_c = +25 °C
– Pressure drop in regulator Δp = 0.2 bar

[2] Supplied without flare nuts. Separate flare nuts can be supplied: ½ in./12 mm, code no. **011L1103**, ⅝ in./16 mm, code no. **011L1167**.

[3] The connection dimensions chosen must not be too small, since gas velocities in excess of 40 m/s at the inlet of the regulator can give flow noise.

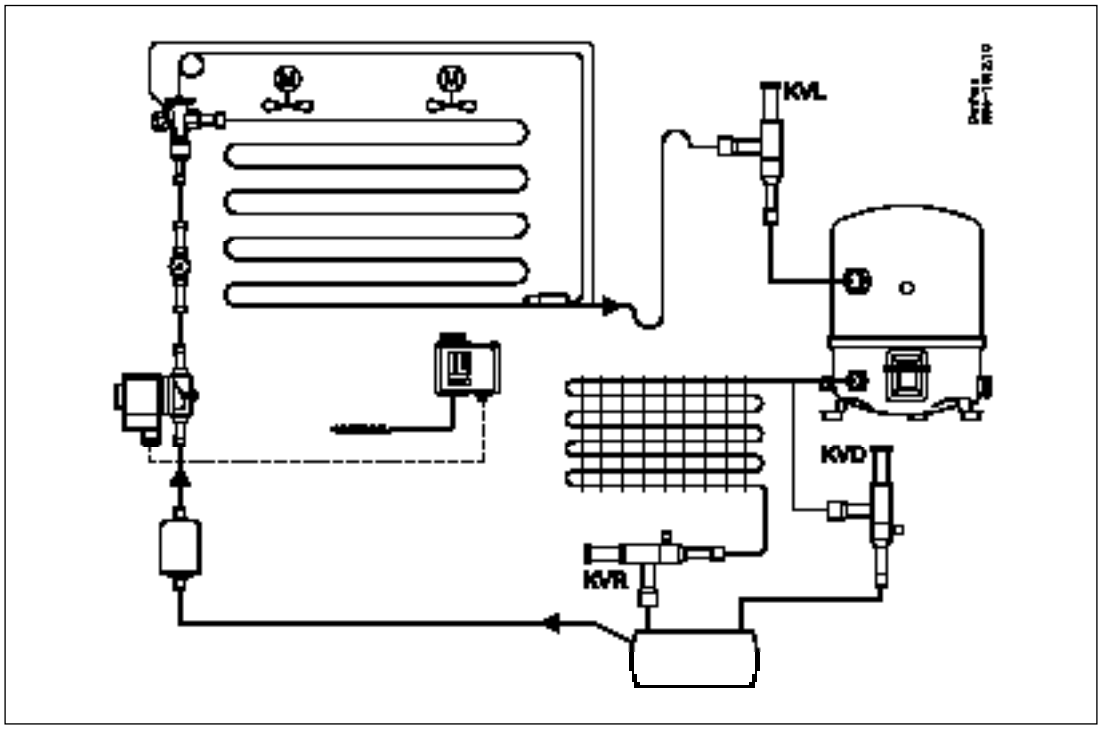

KVD – Receiver pressure regulators

KVD is a modulating pressure regulator. It opens on falling receiver pressure and bypasses hot gas to maintain the receiver pressure at the regulator setting (adjustable).
KVD and KVR form a regulating system, used to maintain constant and adequately high condensing and receiver pressure in plant with heat-recovery, and in refrigeration and air conditioning plant with air-cooled condensers.

Features

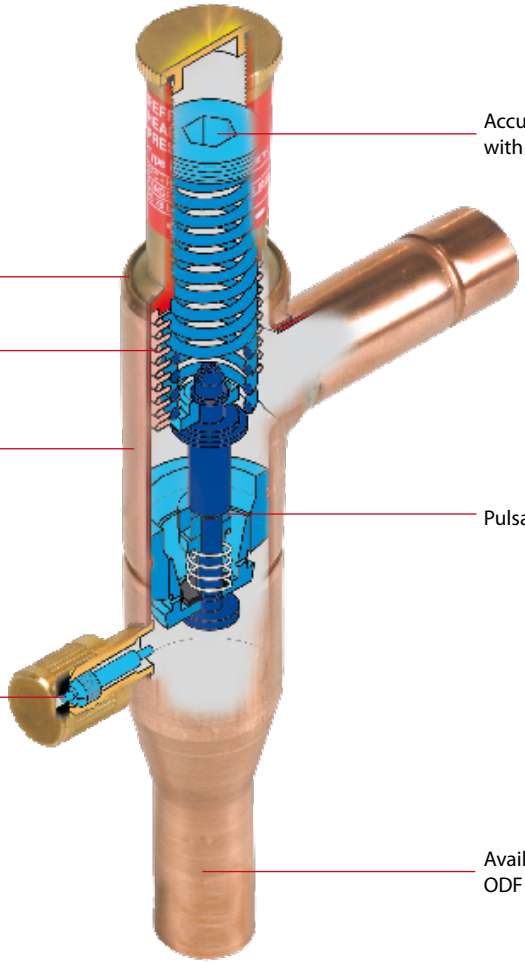

Applications	Advantages	Facts
· Traditional refrigeration · Air conditioning units · Commercial refrigeration	· The regulator is equipped with an effective damping device against pulsations which can normally arise in a refrigeration plant. · KVD regulations is only dependent upon the outlet pressure. Pressure variations on the inlet side of the regulator do not affect the degree of opening since KVD is equipped with an equalization bellows.	· Wide capacity and operating range · Regulation range: 3 to 20 bar · Max. working pressure PS = 28 bar · Can be used as a relief valve from high pressure to suction side · For use with HCFC and HFC refrigerants

Technical data and ordering

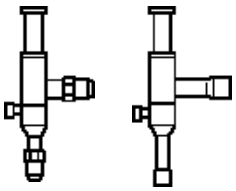

Receiver pressure regulators

Type	k_v value m^3/h [1]	Flare connection [2] [3]		Code no.	Solder, ODF connection [3]		Code no.
		in.	mm		in.	mm	
KVD 12	1.75	½	12	034L0171	½	-	034L0173
	1.75	-	-	-	-	12	034L0176
KVD 15	1.75	⅝	16	034L0172	⅝	16	034L0177

[1] The k_v value is the flow of water in m^3/h at a pressure drop across valve of 1 bar, $\rho = 1000$ kg/m^3.

[2] Supplied without flare nuts. Separate flare nuts can be supplied: ½ in./12 mm, code no. **011L1103**, ⅝ in./16 mm, code no. **011L1167**.

[3] The connection dimensions chosen must not be too small, since gas velocities in excess of 40 m/s at the inlet of the regulator can give flow noise.

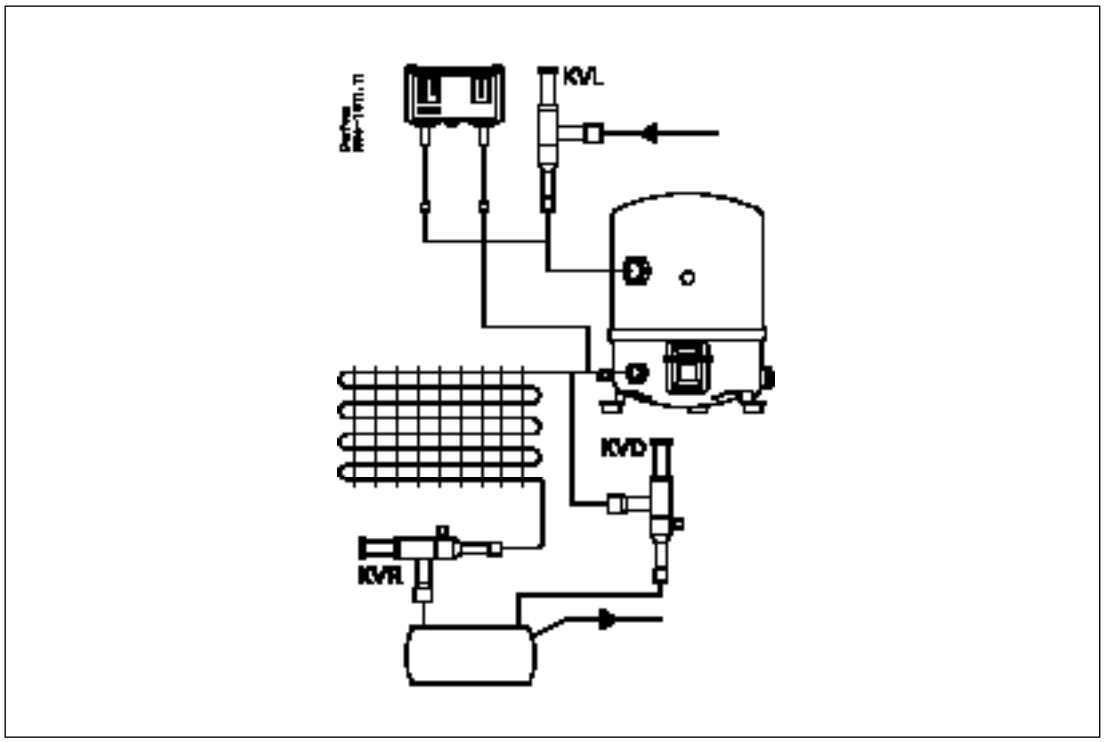

KVC – Capacity regulators

KVC is a capacity regulator used for the adaption of the compressor capacity to the actual evaporator load. Placed in a bypass between high- and low pressure sides of the refrigeration system, KVC imposes a lower limit on the compressor suction pressure by supplying the low pressure side with replacement capacity in the form of hot gas/cool gas from the high pressure side.

Features

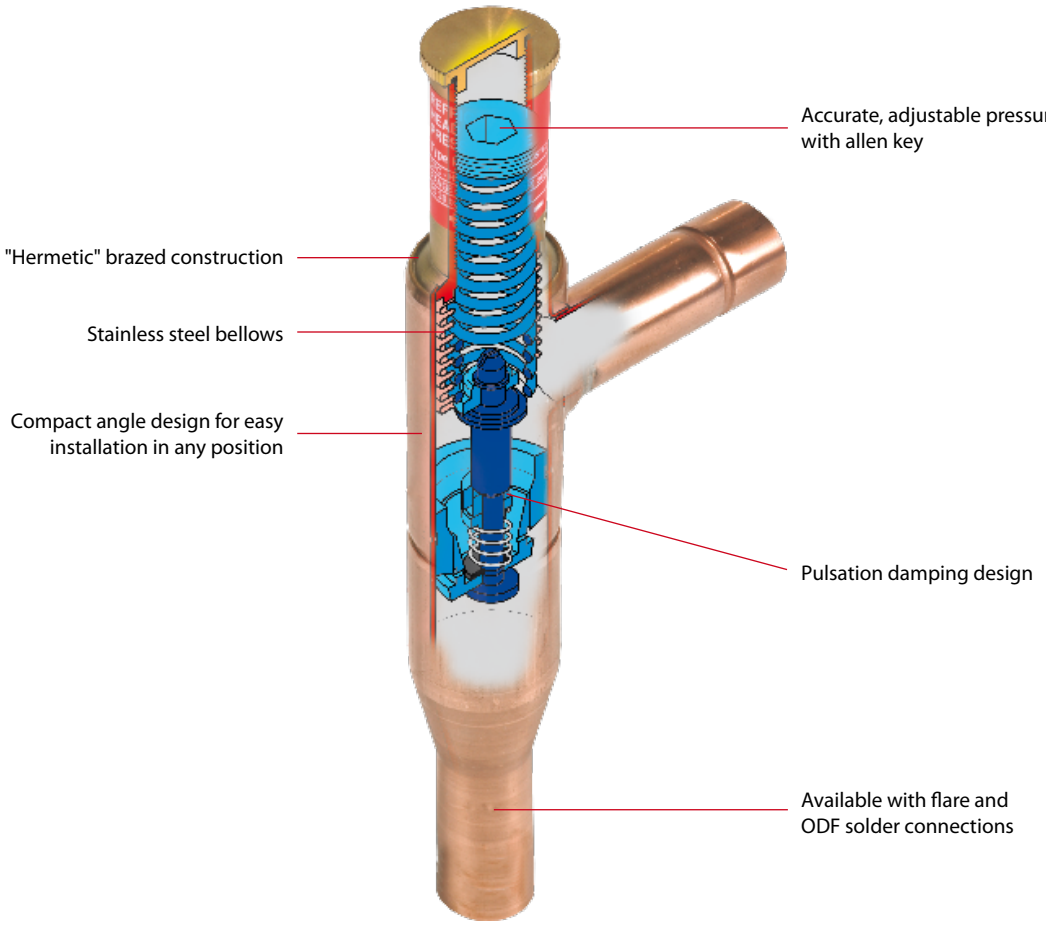

Applications	Advantages	Facts
· Traditional refrigeration · Air conditioning units · Transport refrigeration · Commercial refrigeration · Compressed air driers	· KVC regulations is only dependent upon the outlet pressure. Pressure variations on the inlet side of the regulator do not affect the degree of opening since KVC is equipped with an equalization bellows. · The regulator is also equipped with an effective damping device against pulsations which can normally arise in a refrigeration plant. · Compact angle design for easy installation	· Wide capacity and operating range · Regulation range: 0.2 to 6 bar · Maximum working pressure PS = 28 bar · For use with HCFC and HFC refrigerants · Medium temperature: - 45 up to 130 °C

Technical data and ordering

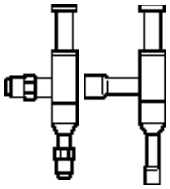

Capacity regulators

Type	Rated capacity in kW [4]				Flare connection [1] [2]		Code no.	Solder connection [2]		Code no.
	R22	R134a	R404A/R507	R407C	in.	mm		in.	mm	
KVC 12 [3]	7.6	4.8	6.9	8.4	½	12	034L0141	½	-	034L0143
					-	-	-	-	12	034L0146
KVC 15 [3]	14.9	9.4	13.6	16.4	⅝	16	034L0142	⅝	16	034L0147
KVC 22 [3]	19.1	12.0	17.4	21.0	-	-	-	⅞	22	034L0144

[1] Supplied without flare nuts. Separate flare nuts can be supplied: ½ in./12 mm, code no. **011L1103**, ⅝ in./16 mm, code no. **011L1167**.

[2] The connection dimensions chosen must not be too small, since gas velocities in excess of 40 m/s at the inlet of the regulator can give flow noise.

[3] If the discharge temperature becomes too high in relation to the compressor specification, the installation of an injection valve in a bypass between liquid line and compressor suction line is recommended.

[4] Rated capacity is the capacity of the regulator at:
– Evaporating temperature t_e = –10 °C,
– Condensing temperature t_c = +25 °C

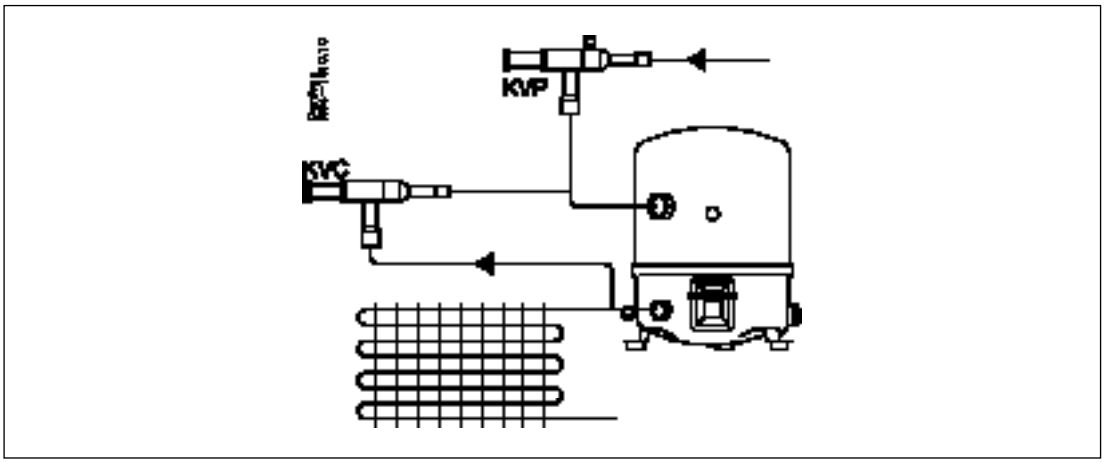

CPCE – Capacity regulator

CPCE capacity regulators adapt compressor capacity to actual evaporator load. They are designed for installation in a bypass line between the low and high pressure sides of the refrigeration system, for hot gas injection between evaporator and thermostatic expansion valve. Injection should be arranged to occur through an LG liquid-gas mixer.

Features

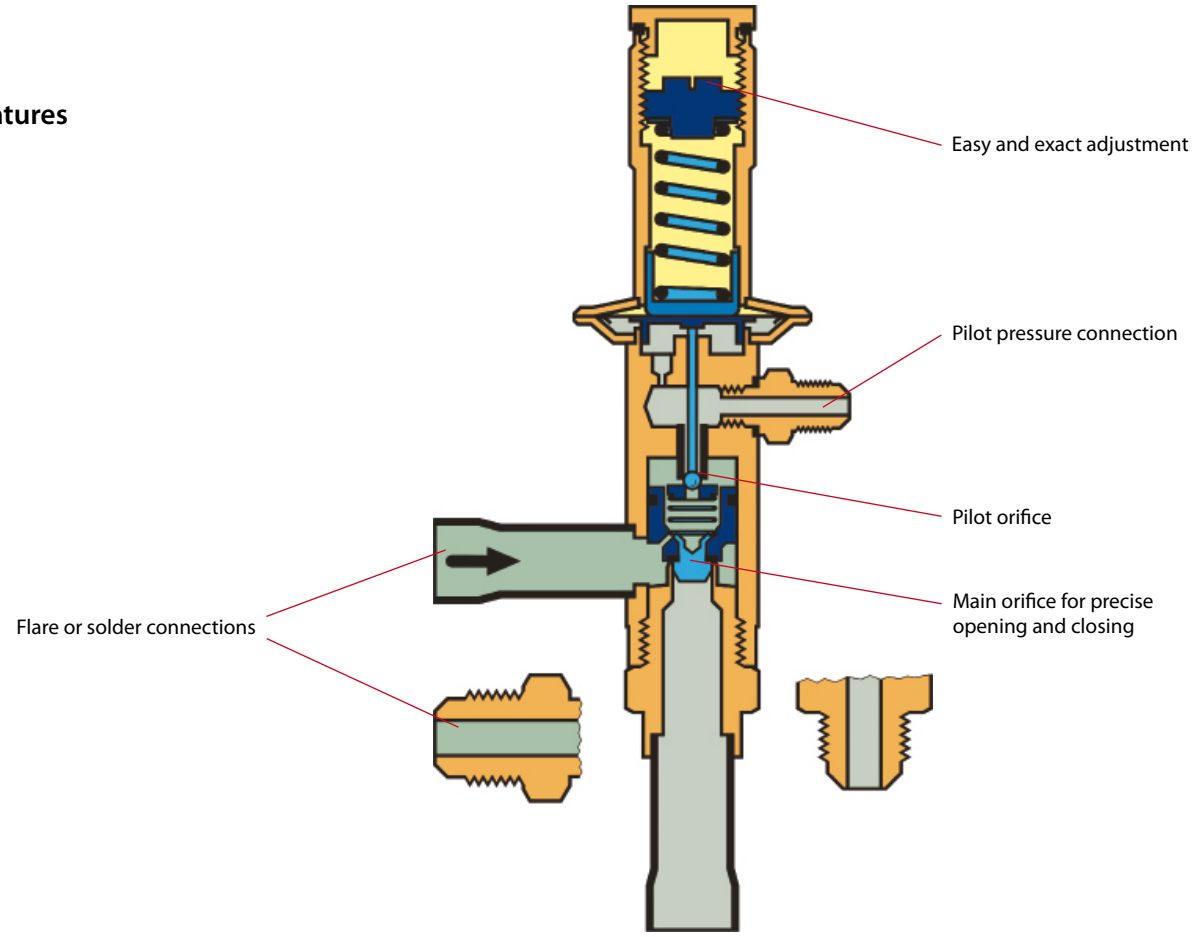

Applications	Advantages	Facts
· Traditional refrigeration · Air conditioning units · Commercial refrigeration · Compressed air dryers · Transport refrigeration	· Avoids high suction superheats by combining hot gas injection with expansion valve characteristics · Can also protect against too low an evaporating temperature, i.e. avoids evaporator icing · LG can be used for hot gas defrosting or reverse cycle systems · Superior control accuracy	· The regulator increases evaporator gas velocity thus ensuring better oil return to compressor · Direct connection to system suction line regulates hot gas injection independent of evaporator pressure drop · LG provides homogenous mixing of the liquid and hot gas refrigerant injected into the evaporator · Can be used for HCFC and HFC refrigerants · Max. working pressure PS = 28 bar

Technical data and ordering

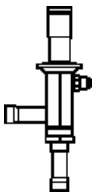

Capacity regulators

Type	Rated capacity in kW [1]				Flare connection		Solder connection		Code no.
	R22	R134a	R404A/R507	R407C	in.	mm	in.	mm	
CPCE 12	17.4	7.9	16.4	19.0	½	12	-	-	034N0081
CPCE 12	17.4	7.9	16.4	19.0	-	-	½	12	034N0082
CPCE 15	25.6	11.6	24.2	27.9	-	-	⅝	16	034N0083
CPCE 22	34.0	15.2	32.0	37.1	-	-	⅞	22	034N0084

[1] Rated capacity is the capacity of the regulator at:
– Evaporating temperature t_e = –10 °C,
– Condensing temperature t_c = +30 °C
– Reduction of suction temperature/pressure Δt_s = CPCE: 4 K.

Liquid-gas mixer

Type	Connection						Code no.
	Expansion valve Solder, ODM		Hot gas Solder, ODF		Liquid distributor Solder, ODF		
	in.	mm	in.	mm	in.	mm	
LG 12-16	⅝	16	½	12	⅝	16	069G4001
LG 12-22	⅞	22	½	12	⅞	22	069G4002
LG 16-28	1⅛	28	⅝	16	1⅛	28	069G4003
LG 22-35	1⅜	35	⅞	22	1⅜	35	069G4004

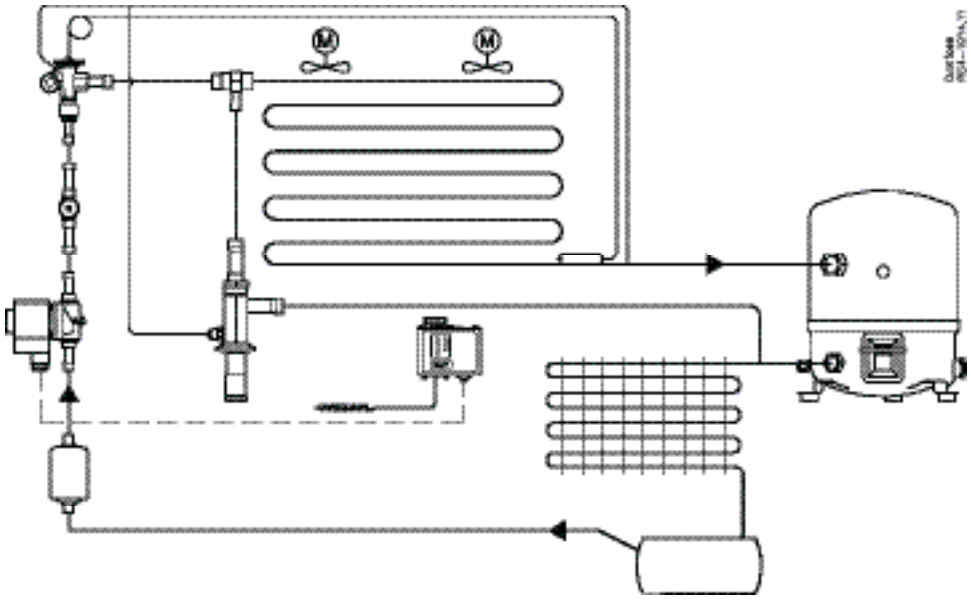

ICM – Flexline™ Motor valves

Danfoss' extensive experience has been used to create a new valve concept which sets new and improved standards with respect to the demands required from control and injection valves.
ICM valves are manufactured with a series of unique features.

Features

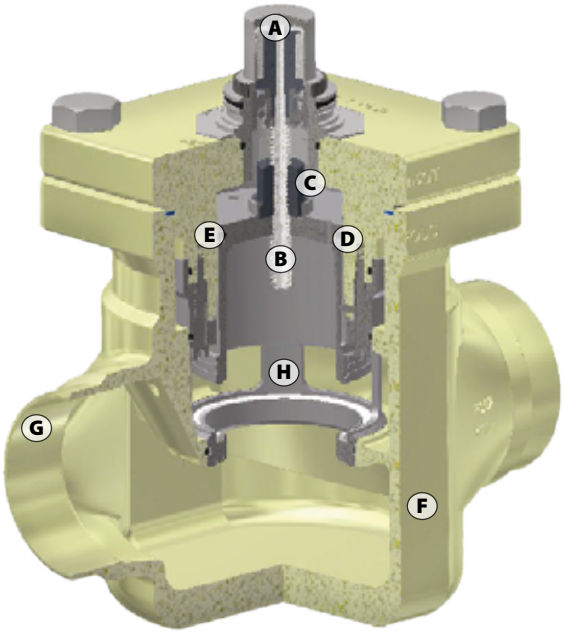

ICM

- **A** Hermetic sealed magnet coupling
- **B** Spindle
- **C** PEEK nut
- **D** Teflon piston sealing
- **E** Pressure balanced piston
- **F** Low temperature steel housing, approved for 52 bar
- **G** Direct weld connections
- **H** Optimized regulating cone

Advantages and features

- Designed for industrial refrigeration applications for a maximum working pressure of 52 bar/754 psig.
- Modular Concept
  - Each valve body is available with several different connection types and sizes
  - Valve overhaul is performed by replacing the function module
  - Possible to convert ICM motor valve to ICS servo valve.
- Low weight and compact design.
- Low temperature steel body
- Direct coupled connections
  Connection types include butt weld, socket weld, solder and threaded connections.
- V-port regulating cone ensures optimum regulating accuracy particularly at part load.
- Manual opening possible via ICAD or Multifunction tool.
- Cavitation resistant valve seat.
- Magnet coupling - real hermetic sealing.

Facts

- Refrigerants:
  Applicable to all common refrigerants including R717 and R744 (CO_2) and non- corrosive gases/liquids.
  Use with flammable hydrocarbons cannot be recommended; please contact Danfoss.
- Temperature range
  –60/+120 °C (–76/+248°F).
- Surface protection
  The external surface is zinc-chromated to provide good corrosion protection.
- Pressure range
  The valve is designed for:
  Max. working pressure: 52 bar g (754 psig)
- Max. openening pressure differential (MOPD)
  – ICM 20-32: 52 bar (750 psi)
  – ICM 40: 40 bar (580 psi)
  – ICM 50: 30 bar (435 psi)
  – ICM 65: 20 bar (290 psi)
  – ICM 100: 20 bar (290 psi)
  – ICM 125: 20 bar (290 psi)
  – ICM 150: 20 bar (290 psi)

The ICM concept

The ICM concept is developed around a modular principle. This gives the possibility of combining function modules and top covers with special valve body size that is available in a variety of connection possibilities.

The valve body

There are nine valve bodies available.

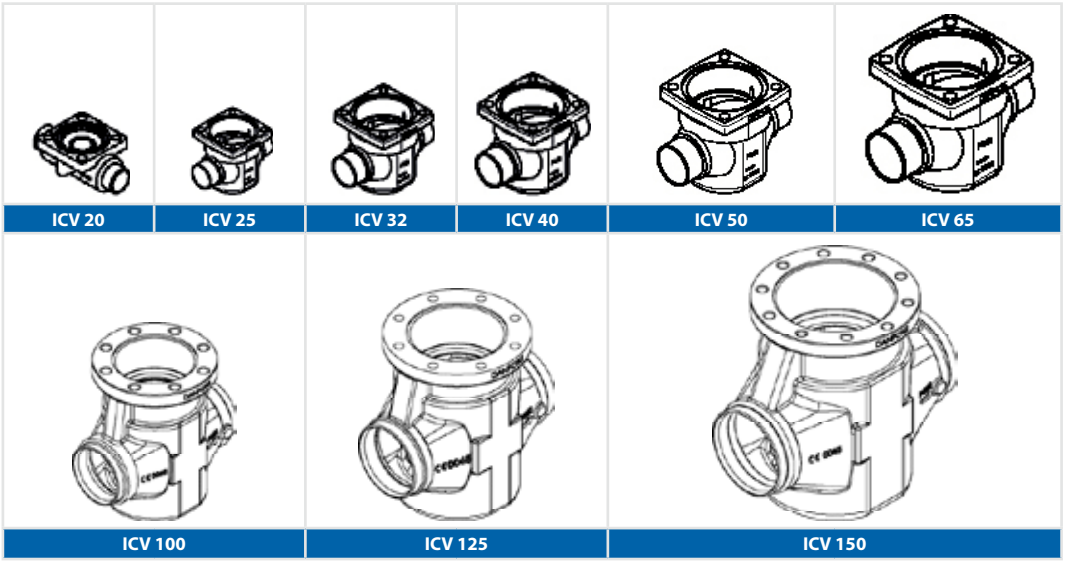

ICV 20	ICV 25	ICV 32	ICV 40	ICV 50	ICV 65

ICV 100	ICV 125	ICV 150

Valve bodies in the sizes ICV 20-ICV 65 are available with a range of undersizes through oversized connection sizes and types. ICV 100-ICV 150 are available in butt-weld DIN and butt-weld ANSI nominal sizes.

D	A	J	SOC	SD	SA	FPT
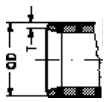	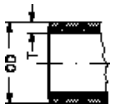	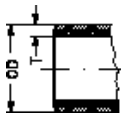	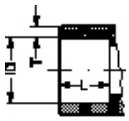	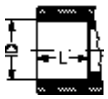	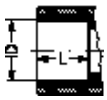	
Butt-weld DIN	Butt-weld ANSI	Butt-weld JIS	Socket weld ANSI	Solder DIN	Solder ANSI	Female Pipe Thread

The function module / top cover

Each body may be fitted with multiple function module / top cover to give different capacities.

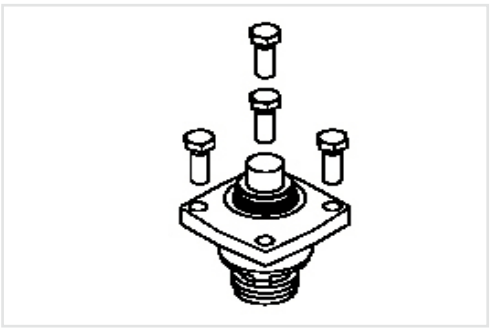

Type	Valve body size	k_v (m^3/h)	C_v (USgal/min)
ICM20A-33	20	0.2	0.23
ICM 20-A		0.6	0.7
ICM 20-B66		1.6	1.9
ICM 20-B		2.4	2.8
ICM 20-C		4.6	5.3
ICM 25-A	25	6	7.0
ICM 25-B		12	13.9
ICM 32-A	32	9	10.4
ICM 32-B		17	20
ICM 40-A	40	15	17
ICM 40-B		26	30
ICM 50-A	50	23	27
ICM 50-B		40	46
ICM 65-A	65	35	41
ICM 65-B		70	81
ICM 100-B	100	142	167
ICM 125-B	125	223	260
ICM 150-B	150	370	430

The actuator

A magnetic coupled actuator is easily installed. Three actuators cover the entire ICM program

ICAD 600	ICAD 900	ICAD 1200

Ordering the ICM valve

For correct selection of the ICM motor valve please use the Danfoss calculation Software. The software is free of charge.

	Type	ICM 20-A	ICM 20-B	ICM 20-C	ICM 25-A	ICM 25-B	ICM 32-A	ICM 32-B
		For ICAD 600 actuator (not included)						
Connection		Code no.	Code no.	Code no.	Code no.	Code no.	Code no.	Code no.
Butt-weld DIN	DN 20	027H1030	027H1031	027H1032				
	DN 25	027H1020	027H1021	027H1022	027H2000	027H2001		
	DN 32						027H3000	027H3001
	DN 40				027H2016		027H3012	
Solder DIN & ANSI	22 mm	027H1045	027H1046	027H1047	027H2006	027H2007		
	28 mm				027H2008	027H2009		
	35 mm				027H2014		027H3006	027H3007
	7/8" SA	027H1050	027H1051	027H1052	027H2010	027H2011		
	1 1/8" SA				027H2012	027H2013		
	1 3/8" SA						027H3006	027H3007
	1 5/8" SA						027H3008	027H3009

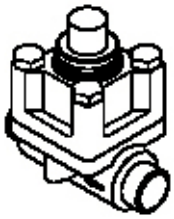

ICM 20

	Type	ICM 40-A	ICM 40-B	ICM 50-A	ICM 50-B	ICM 65-B	ICM 100-B	ICM 125-B	ICM 150-B
		For ICAD 900 actuator (not included) (ICAD 1200 optional possible)					For ICAD 1200 actuator (not included)		
Connection		Code no.	Code no.	Code no.	Code no.	Code no.	Code no.	Code no.	Code no.
Butt-weld DIN	DN 40	027H4000	027H4001						
	DN 50	027H4010		027H5000	027H5001				
	DN 65			027H5008		027H6001			
Solder DIN & ANSI	42 mm	027H4008	027H4009						
	54 mm			027H5006	027H5007				
	76 mm					027H6009			
	1 5/8" SA	027H4006	027H4007						
	2 1/8" SA			027H5006	027H5007				
	2 5/8" SA					027H6007			
Butt-weld D = DIN A = ANSI	100 D (4 in.)						027H7130		
	100 A (4 in.)						027H7131		
	125 D (5 in.)							027H7150	
	125 A (5 in.)							027H7151	
	150 D (6 in.)								027H7170
	150 A (6 in.)								027H7171

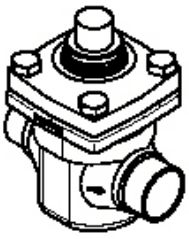

ICM 25-65

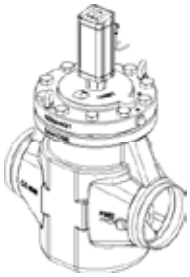

ICM 150

ICAD 600

ICAD 900

ICAD 1200

Actuator type	Supply voltage	Load	Analog Input	Digital Input	Output	Code no.
ICAD 600 with cables	24 V d.c.	1.2 A	0/4-20 mA 0/2-10 V	ON/OFF Volt free contact	0/4-20 mA	027H9065
ICAD 600 without cables						027H9100
ICAD 900 with cables		2.0 A				027H9066
ICAD 900 without cables						027H9101
ICAD 1200 with cable		3.0 A				027H9067
ICAD 1200 without cable						027H9102

Service Tool	Functions	Code no.
for ICM 20-32	Featuring a magnetic coupling for manual operation of the ICM and a threaded end for dismounting of the ICS function module and other useful functions.	027H0180
for ICM 40-150		027H0181

Can be ordered as parts programme (separate ordering of valve body, function / top cover and actuator).

Notes

ICS – Flexline™ Servo valves

Danfoss' extensive experience has been used to create a new valve concept which sets new and improved standards with respect to the demands required from control and injection valves.
ICS valves are manufactured with a series of unique features.

Features

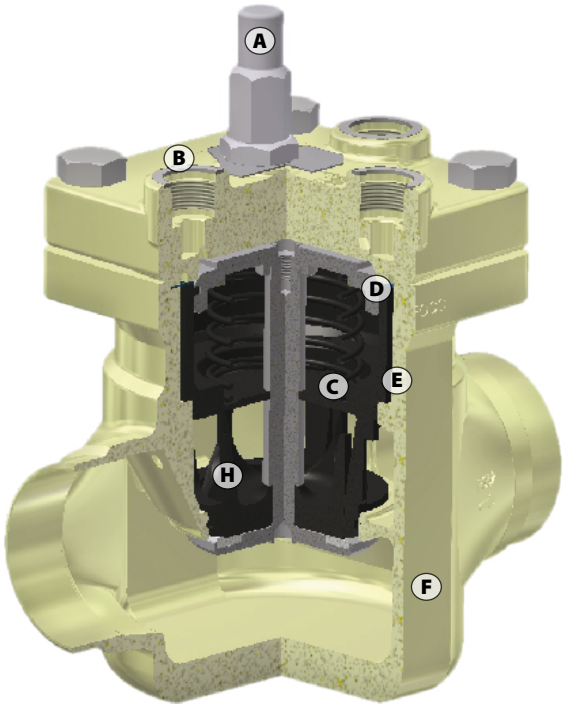

ICS

- (A) Manual opening stem
- (B) Top cover for 1-3 pilots
- (C) Function module
- (D) Steel piston ring
- (E) Surface treated insert
- (F) Low temperature steel housing, approved for 52 bar
- (G) Direct weld connections
- (H) Optimized regulating cone

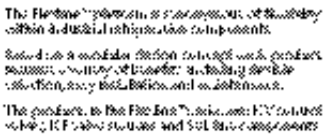

Advantages and features

- Designed for industrial refrigeration applications for a maximum working pressure of 52 bar/754 psig.
- Modular Concept
  - Each valve body is available with several different connection types and sizes
  - Valve overhaul is performed by replacing the function module
  - Possible to convert ICS servo to ICM motor valve
- Low weight and compact design.
- Low temperature steel body
- Direct coupled connections

  Connection types include butt weld, socket weld, solder and threaded connections.
- V-port regulating cone ensures optimum regulating accuracy particularly at part load.
- Manual operating spindle.
- The ICS valve is a multifunction valve where 1 or up to 3 pilot valves can be mounted into the pilot ports.

Facts

- Refrigerants:
  Applicable to all common refrigerants including R717 and R744 (CO_2) and non- corrosive gases/liquids.
  Use with flammable hydrocarbons cannot be recommended; please contact Danfoss.
- Temperature range
  –60/+120 °C (–76/+248°F).
- Surface protection
  The external surface is zinc-chromated to provide good corrosion protection.
- Pressure range
  The valve is designed for:
  Max. working pressure: 52 bar g (754 psig)

The ICS concept

The ICS concept is developed around a modular principle. This gives the possibility of combining function modules and top covers with valve bodies, which are available in many different sizes and with a variety of connection possibilities.

The valve body

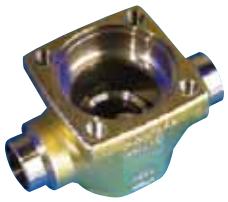

There are eight valve bodies available.

ICS 25	ICS 32	ICS 40	ICS 50
		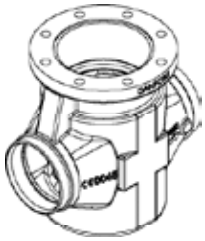	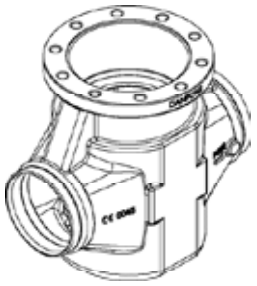
ICS 65	ICS 100	ICS 125	ICS 150

Valve bodies in the sizes ICV 20-ICV 65 are available with a range of undersizes through oversized connection sizes and types.
ICV 100-ICV 150 are available in butt-weld DIN and butt-weld ANSI nominal sizes.

D	A	J	SOC	SD	SA	FPT
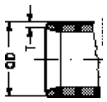	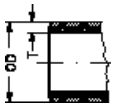	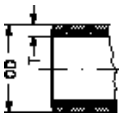	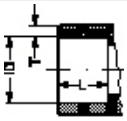	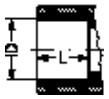	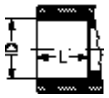	
Butt-weld DIN	Butt-weld ANSI	Butt-weld JIS	Socket weld ANSI	Solder DIN	Solder ANSI	Female Pipe Thread

The top cover

Each valve body may be fitted with a 1 pilot or 3
pilot top cover (except ICS 100-150 – only available as 3 pilots version).

The function module

In ICS, multiple inserts (function modules) are available to give different capacities.

Type	Valve body size	k_v (m^3/h)
ICS 25-5	25	1.7
ICS 25-10		3.5
ICS 25-15		6.0
ICS 25-20		8
ICS 25-25		11.5
ICS 32	32	17
ICS 40	40	27
ICS 50	50	44
ICS 65	65	70
ICS 80	80	85
ICS 100	100	142
ICS 125	125	207
ICS 150	150	354

Ordering the ICS valve

For correct selection of the ICS motor valve please use the Danfoss calculation Software. The software is free of charge.

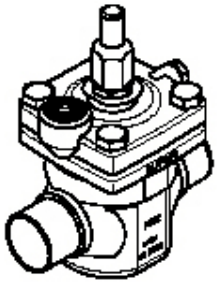

1 pilot

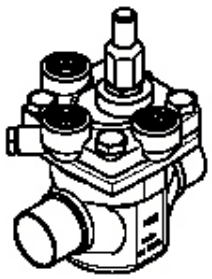

3 pilots

		Available connections							
		20 D (3/4 in.)	25 D (1 in.)	32 D (1 1/4 in.)	40 D (1 1/2 in.)	35 SD (1 3/8 in. SA)	28 SA (1 1/8 in.)	22 SA (7/8 in.)	28 SD (1 1/8 in.)
ICS 25-5	1 Pilot	027H2028	027H2020				027H2026	027H2025	027H2024
	3 Pilots*	027H2078	027H2070				027H2076	027H2075	027H2074
ICS 25-10	1 Pilot	027H2038	027H2030				027H2036	027H2035	027H2034
	3 Pilots*	027H2088	027H2080				027H2086	027H2085	027H2084
ICS 25-15	1 Pilot	027H2048	027H2040				027H2046	027H2045	027H2044
	3 Pilots*	027H2098	027H2090				027H2096	027H2095	027H2094
ICS 25-20	1 Pilot	027H2058	027H2050				027H2056	027H2055	027H2054
	3 Pilots*	027H2108	027H2100				027H2106	027H2105	027H2104
ICS 25-25	1 Pilot	027H2068	027H2060				027H2066	027H2065	027H2064
	3 Pilots*	027H2118	027H2110				027H2116	027H2115	027H2114

		22 SD (7/8 in.)	20 A (3/4 in.)	25 A (1 in.)	32 A (1 1/4 in.)	20 SOC (3/4 in.)	25 SOC (1 in.)	20 FPT (3/4 in.)	25 FPT (1 in.)
ICS 25-5	1 Pilot	027H2023	027H2029	027H2021		027H2140			
	3 Pilots*	027H2073	027H2079	027H2071		027H2145			
ICS 25-10	1 Pilot	027H2033	027H2039	027H2031		027H2141			
	3 Pilots*	027H2083	027H2089	027H2081		027H2146			
ICS 25-15	1 Pilot	027H2043	027H2049	027H2041		027H2142			
	3 Pilots*	027H2093	027H2099	027H2091		027H2147			
ICS 25-20	1 Pilot	027H2053	027H2059	027H2051		027H2143			
	3 Pilots*	027H2103	027H2109	027H2101		027H2148			
ICS 25-25	1 Pilot	027H2063		027H2061			027H2062		
	3 Pilots*	027H2113		027H2111			027H2112		

		Available connections						
		32 D (1 1/4 in.)	40 D (1 1/2 in.)	42 SA (1 5/8 in.)	42 SD (1 5/8 in.)	35 SD (1 3/8 in. SA)	32 A (1 1/4 in.)	32 SOC (1 1/4 in.)	40 A (1 1/2 in.)
ICS 32	1 Pilot	027H3020				027H3023	027H3021	027H3022	
	3 Pilots*	027H3030				027H3033	027H3031	027H3032	

		Available connections						
		40 D (1 1/2 in.)	50 D (2 in.)	42 SA (1 5/8 in.)	42 SD (1 5/8 in.)	40 A (1 1/2 in.)	40 SOC (1 1/2 in.)	50 A (2 in.)
ICS 40	1 Pilot	027H4020		027H4024	027H4023	027H4021	027H4022	
	3 Pilots*	027H4030		027H4034	027H4033	027H4031	027H4032	

		Available connections					
		50 D (2 in.)	65 D (2 1/2 in.)	54 SD (2 1/8 in. SA)	65 A (2 1/2 in.)	50 A (2 in.)	50 SOC (2 in.)
ICS 50	1 Pilot	027H5020		027H5023		027H5021	027H5022
	3 Pilots*	027H5030		027H5033		027H5031	027H5032

		Available connections							
		65 D (2 1/2 in.)	65 A (2 1/2 in.)	65 SOC (2 1/2 in.)	80 D (3 in.)	80 A (3 in.)	67 SA (2 5/8 in.)	76 SD (3 in.)	65 J (2 1/2 in.)
ICS 65	1 Pilot	027H6020	027H6021	027H6023			027H6025	027H6024	
	3 Pilots*	027H6030	027H6031	027H6033			027H6035	027H6034	
ICS 80	1 Pilot*				027H8020	027H8021			
	3 Pilots*				027H8030	027H8031			

		Available connections					
		100 D (4 in.)	100 A (4 in.)	125 D (5 in.)	125 A (5 in.)	150 D (6 in.)	150 A (6 in.)
ICS 100	3 Pilots*	027H7120	027H7121				
ICS 125	3 Pilots*			027H7140	027H7141		
ICS 150	3 Pilots*					027H7160	027H7161

Can be ordered as parts programme (separate ordering of valve body, top cover and function module).

*) Including one blanking plug

ICS application examples

There are several combination possibillieties; here you will see an overview of the most important ICS application possibillities.

Example no. 1-1

Constant pressure regulation.
–0.66 to 7 bar g
(19.5 in. Hg to 102 psig).

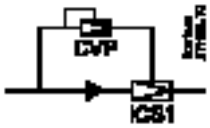

Products

1 × ICS 1 Pilot
1 × CVP (LP)

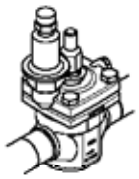

Example no. 1-2

Differential pressure regulation.
0 to 7 bar g (0 to 102 psig).

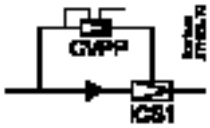

Products

1 × ICS 1 Pilot
1 × CVPP (LP)

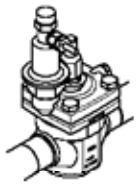

Example no. 1-5

On/off regulation (solenoid valve).

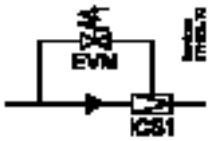

Products

1 × ICS 1 Pilot
1 × EVM
1 × coil

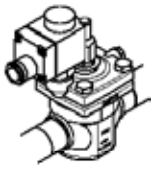

Example no. 1-11

Electronically controlled media temperature regulation.
–1 to 8 bar g
(0 in. Hg to 116 psig).

Products

1 × ICS 1 Pilot
1 × CVQ

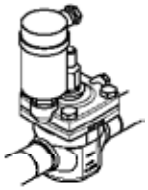

Example no. 3-1

Constant pressure regulation combined with electrical shut off.
–0.66 to 7 bar g
(19.5 in. Hg to 102 psig).

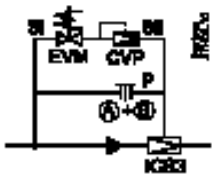

Products

1 × ICS 3 Pilots
1 × blanking plug
1 × CVP (LP)
1 × EVM
1 × coil

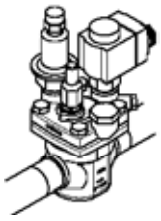

The ICS valve will be fully open if the pilot valve in P is fully open, irrespective of the degree of opening of pilot valves SI and SII.
The ICS valve will be fully closed if the pilot valve in P is fully closed and at least one of the valves in SI or SII is fully closed at the same time. The relation between the pilot valves in ports SI, SII and P is shown in the table below.

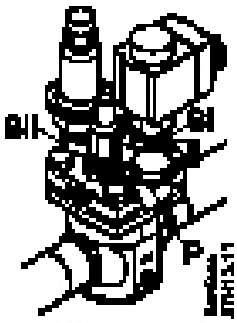

Blanking plug A + B Blanking plug A

Pilot valve port			ICS valve
SI	SII	P	
Open	Open	Closed	Open
Open	Open	Open	Open
Open	Closed	Closed	Closed
Open	Closed	Open	Open
Closed	Open	Closed	Closed
Closed	Open	Open	Open
Closed	Closed	Closed	Closed
Closed	Closed	Open	Open

ICS application examples (continued)

Example no. 3-2

Constant pressure regulation combined with electrical wide open.
–0.66 to 7 bar g
(19.5 in. Hg to 102 psig).

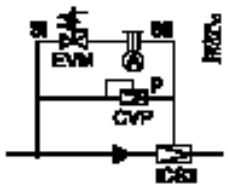

Products

1 × ICS 3 Pilots
1 × blanking plug
1 × CVP (LP)
1 × EVM

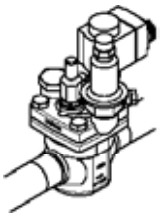

Example no. 3-4

Constant pressure regulation with change-over between two preset evaporating pressures.
–0.66 to 7 bar g
(19.5 in. Hg to 102 psig).

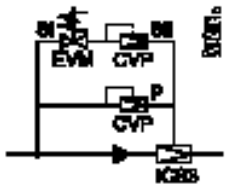

Products

1 × ICS 3 Pilots
2 × CVP (LP)
1 × EVM
1 × coil

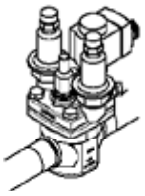

Example no. 3-5

External control pressure with electrical shut off combined with constant pressure regulation.
–0.66 to 7 bar g
(19.5 in. Hg to 102 psig).

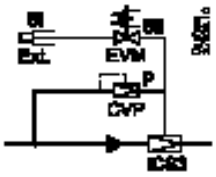

Products

1 × ICS 3 Pilots
1 × nipple for external control pressure
1 × CVP (LP)
1 × EVM
1 × coil

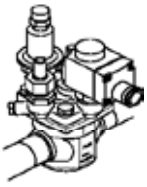

Example no. 3-18

Constant pressure regulation with change-over between two preset evaporating pressures.
–0.66 to 28 bar g
(19.5 in. Hg to 406 psig).

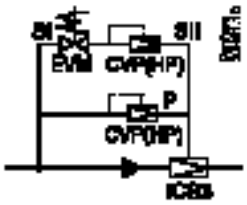

Products

1 × ICS 3 Pilots
2 × CVP (HP)
1 × EVM
1 × coil

Example no. 3-21

Differential pressure regulation combined with electrical wide open and shut off.
0 to 22 bar g
(0 to 319 psig).

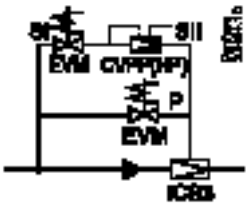

Products

1 × ICS 3 Pilots
1 × CVPP (HP)
2 × EVM
2 × coils

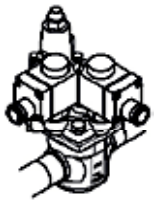

Example no. 3-25

Crankcase pressure regulation (max. suction pressure regulation) at low pressure drops across the valve.
–0.45 to 7 bar g
(13.3 in. Hg to 102 psig).

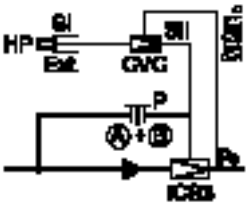

Products

1 × ICS 3 Pilots
1 × blanking plug
1 × nipple for external control pressure
1 × CVC

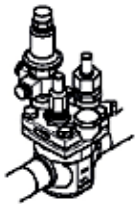

Example no. 3-31

Electronically controlled media temperature regulation combined with electrical shut off and changeover to constant pressure regulation.
–1 to 8 bar g
(0 in. Hg to 116 psig).

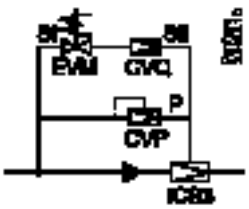

Products

1 × ICS 3 Pilots
1 × CVQ
1 × CVP (LP)
1 × EVM
1 × coil

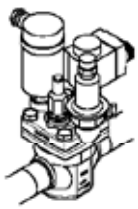

Notes

Pilot valves for servo operated main valves

Each pilot valve is designed to give the optimum control accuracy within the specific function range of the valve.
Several pilot valves can be mounted in series and/or in parallel on a ICS or PM main valve to give a very large number of functions.
Mounted in a CVH housing, the pilot valves can be used in external lines, either as independently operating valves or as external control valves for the main valve.

Advantages and features

The range of pilot valves consists of:

- Constant-pressure pilot valve, type CVP (LP) and CVP (HP)
- Differential-pressure pilot valve, type CVPP (LP) and CVPP (HP)
- High pressure pilot valve, type CVP (XP) ideal for CO_2 hot gas defrosting
- Pressure-operated pilot valve with reference pressure connection, type CVC
- Electronically operated constant-pressure pilot valve, type CVQ (pressure-dependent)
- Solenoid pilot valve, type EVM (NC)
- Solenoid pilot valve, type EVM (NO)
- Housing, type CVH for pilot valves, for mounting in external pilot lines

- Applicable to all common non flammable refrigerants including R 717 and non corrosive gases/liquids dependent on sealing material compatability.
- The pilot valves can be screwed direct into the main valve, thus avoiding the necessity of welding, soldering and separate pilot lines.
- The pilot valves can be mounted direct in a ICS or PM main valve or be connected via an external pilot line and a CVH housing.
- All pilot valves can be used on all sizes of main valves.
- Extremely accurate pressure and temperature control.
- Several pilot valves can be connected in series or in parallel to provide many functions in the same ICS or PM main valve.

Technical data and code numbers

Technical data

	Valve type	MWP	k_v-value	Temperature range	Pressure range	Code no.
Low-pressure version						
	CVP (LP)	17 bar g	0.40 m³/h	–50 to 120°C	0 bar g to 7 bar g	027B1100
	CVP (LP)	17 bar g	0.40 m³/h	–50 to 120°C	–0.66 bar g to 2 bar g	027B1101
	CVPP (LP)	17 bar g	0.40 m³/h	–50 to 120°C	Δp = 0 to 7 bar g	027B1102
	CVC (LP)	28/17 bar g	0.20 m³/h	–50 to 120°C	–0.45 bar g to 7 bar g	027B1070
High-pressure version						
	CVP (HP)	28 bar g	0.40 m³/h	–50 to 120°C	4 bar g to 22 bar g	027B1160
	CVP (HP)	28 bar g	0.40 m³/h	–50 to 120°C	4 bar g to 28 bar g	027B1161
	CVP (HP)	28 bar g	0.40 m³/h	–50 to 120°C	–0.66 bar g to 7 bar g	027B1164
	CVPP (HP)	28 bar g	0.40 m³/h	–50 to 120°C	Δp = 0 to 7 bar g	027B1162
	CVPP (HP)	40 bar g	0.40 m³/h	–50 to 120°C	Δp = 4 to 22 bar g	027B1268
	CVP (XP)	52 bar g	0.45 m³/h	–50 to 120°C	25 bar g to 52 bar g	027B0080
	CVC (XP)	52/28 bar g	0.20 m³/h	–50 to 120°C	4 bar g to 28 bar g	027B0087
Normally closed						
	EVM (NC)	45.2 bar g	0.37 m³/h		MOPD: 21 bar g	027B1120
	EVM (NC)	65 bar g	0.37 m³/h		MOPD: 21 bar g	032F8011
Normally open						
	EVM (NO)	45.2 bar g	0.12 m³/h		MCPD: 19 bar g	027B1130
	EVM (NO)	52 bar g	0.12 m³/h		MCPD: 19 bar g	027B1131

CVQ electrical data

	CVQ	17 bar g	0.45 m³/h		–1 bar g to 5 bar g	027B1139
	CVQ	17 bar g	0.45 m³/h		0 bar g to 6 bar g	027B1140
	CVQ	17 bar g	0.45 m³/h		1.7 bar g to 8 bar g	027B1141

Supply voltage		24V a.c. ±10%
Frequency		50 to 60 Hz
Power consumption,	operation start	50 VA 75 VA
Enclosure		NEMA 3 / IP55
Cable entry		Pg 13.5
Ambient temperature,	operation transport	–30 to 50°C (–22 to 122°F) –50 to 70°C (–58 to 158°F)
CE -marking		EMC-Directive 89/336/EEC, EMC-Directiv 89/336/ EN 50081-1 and EN 50082-1

ICF – Flexline™ Valve stations

The ICF valve station is an innovative solution that provides the full functionality of a conventional valve station in a single compact unit. This solution not only provides a number of advantages in the design phase of a refrigeration plant but also in the installation, service and maintenance.

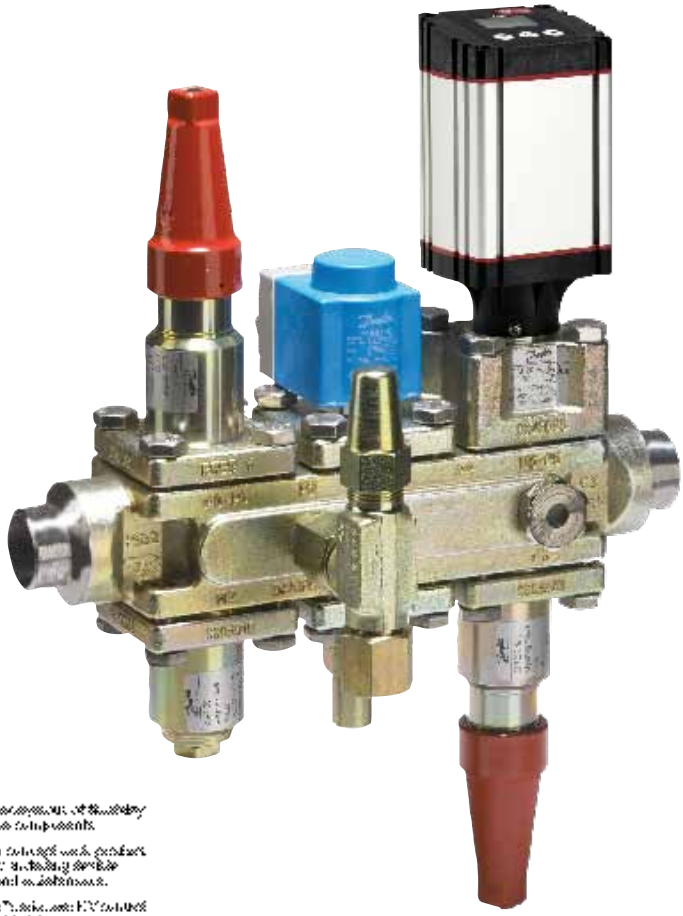

Advantages and features

- Applicable to all common non-flammable refrigerants including R744 and R717.
- The main components of the ICF solution are:
  - A housing
  - A maximum of four or six function modules
- Designed for low and high pressure refrigerants and can be used in liquid lines, compressor injection and hotgas lines
- The ICF concept is designed to fulfil global refrigeration requirements. For specific approval information, please contact Danfoss
- One code number equals one application solution
- Modular concept: Each housing is available with several different connection types and sizes
- The ICF is leak tested at high pressure and its functions are tested under factory controlled conditions
- The ICF valve is a compact valve train ready for the jobsite. No need to disassembly prior to installation under normal welding procedures
- Down time during service is reduced to a fraction compared to conventional valve trains. The unique design of the ICF ensures a quick pump down and faster access to valve modules.
- Valve service is performed by replacing the function module
- Standard side ports to fit service valves, pressure transmitters, sight glasses
- Direct Weld Connections (no leaks through flanges)
- Available with different connection types including ANSI and DIN, Socket weld
- Low temperature steel housing
- High capacities low pressure drop
- Compact design
- Low weight design

Technical data and application examples

Technical data

Refrigerants	Applicable to all common non-flammable refrigerants including R717, R744 (CO_2) and non-corrosive gases/ liquids dependent on sealing material compatibility.
Temperature range	–60/+120°C (–76/+248°F).
Presssure range	The ICF is designed for max. working pressure: 52 bar g (754 psig)
Modules	4 or 6
Connections	Butt weld, DIN (EN 10220): 20D (3/4") to 40D (1½") Butt weld, ANSI (B 36.10) : 20A (3/4") to 40A (1½") Socket weld, ANSI (B 16.11): 20SOC (3/4") to 40SOC (1½")
Housing ICF 20	**Small frame** ICF 20-4 ICF 20-6
Housing ICF 25-40	**Large frame** 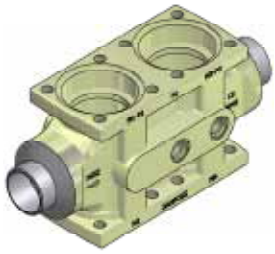 ICF (25-40)-4 ICF (25-40)-6
Side ports	Number of side port are depending on on model and connection type

Accessories

- Stop valve (for sideport)
- Blind plug
- Connectors
- Sight glass
- Weld connector
- ICAD and ICAD accessories
- Coils

For a complete overview of available ICF configurations please visit www.danfoss.com/icf

Description of the function modules for ICF 20

ICFS 20
Stop valve module
This module has the function of a stop valve, and has a red cap.

ICFR 20A
Manual regulating valve module
This module has the function of a hand regulating valve, and has a yellow cap.

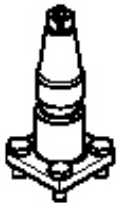

ICFS 20 / ICFR 20A

ICFC 20
Check valve module
This module has the function of a check valve.

ICFC 20

ICFF 20 / ICFF 20E
Filter module
This module functions as a filter.

Filter size (ICFF 20):
ICF with DIN and ANSI connections: Pleated 150µ (100 mesh) /45 cm² (7.0 in²)

ICF with SOC connections (ICFF 20E):
Pleated 250µ (72 mesh) / 160 cm² (24.8 in²)

ICFF 20 / ICFF 20E

ICFN 20
Stop/check valve module
This module has the function of a combined stop and check valve, and has a red cap.

ICFN 20

ICFE 20
Solenoid valve module
This module has the function of a normally closed solenoid valve for controlling the refrigerant flow.

ICFA 20
Electronic expansion valve module
This module has the function of an electronic pulse width modulating (PWM) expansion valve.

ICFE 20 / ICFA 20

ICM 20-A, B or C
Motor valve module
This module is a stepper motor actuator valve for on/off and modulating control of the refrigerant flow.

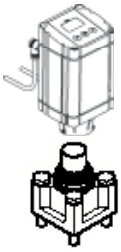

ICM 20-A, B or C

ICFO 20
Manual opening module
This module facilitates the manual opening of the solenoid valve (type ICFE).

ICFO 20

ICFB 20
Blank top cover
This provides a blanking cover for unused module ports.

ICFB 20

ICFE 20H
Solenoid valve module with integrated manual opener
This module has the function of a normally closed solenoid valve for controlling the refrigerant flow.

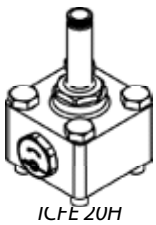

ICFE 20H

ICFW 20
Welding module 20 DIN or ¾" SOC
This module is used for drain connection during hot-gas defrosting - in case of high capacity.

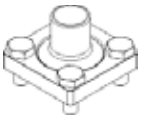

ICFW 20

Please note:
At about 10% of maximum mass flow of
ICFE 20H, the pressure differential correspond to about 0.07 Bar (1 psi). ICFE 20H will start to open at these conditions.
At a pressure differential of minimum 0.2 Bar (2.9 psi) ICFE 20H will be 100 % open.

ICFS 25-40
Stop valve module
This module has the function of a stop valve, and has a red cap.

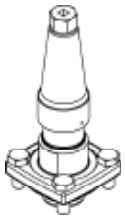

ICFS 25-40

ICFR 25-40, A or B
Manual regulating valve module
This module has the function of a hand regulating valve, and has a yellow cap.

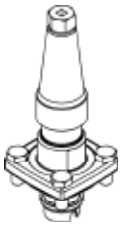

ICFR 25-40

ICFC 25-40
Check valve module
This module has the function of a check valve.

ICFC 25-40

ICFF 25-40 / ICFF (25-40)E
Filter module
This module functions as a filter.

Filter size:
ICF with DIN and ANSI (ICFF 25-40) connections: Pleated 150µ (100 mesh) / 160 cm^2 (24.8 in^2)

ICF with SOC connections (ICF (25-40)E):
Pleated 250µ (72 mesh) / 330 cm^2 (51.2 in^2)

ICFF 25-40 / ICFF (25-40)E

ICFN 25-40
Stop/check valve module
This module has the function of a combined stop and check valve, and has a red cap.

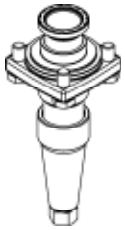

ICFN 25-40

ICFE 25-40
Solenoid valve module
This module has the function of a normally closed solenoid valve for controlling the refrigerant flow.

It has a built-in manual opening function.

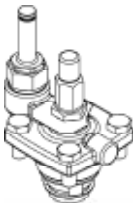

ICFE 25-40

ICM 25-A or B
Motor valve module
This module is a stepper motor actuator valve for on/off and modulating control of the refrigerant flow.

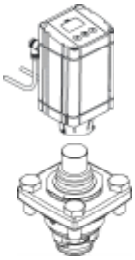

ICM 25-A or B

Please note:
At about 10% of maximum mass flow of ICFE 25-40, the pressure differential correspond to about 0.07 Bar (1 psi). ICFE 25-40 will start to open at these conditions.

At a pressure differential of minimum 0.2 Bar (2.9 psi) ICFE 25-40 will be 100 % open.

ICFW 25-40
Welding module, 25 DIN or 25 (1") SOC
This module is used for drain connection during hot-gas defrosting - in case of high capacity.

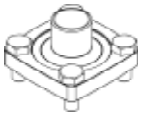

ICFW 25-40

ICFB 25-40
Blank top cover
This provides a blanking cover for unused module ports.

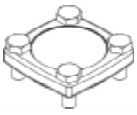

ICFB 25-40

Application example A

A valve combination for a flooded evaporator operating on/off from a thermostat and with electric defrost is required. Manual override of the solenoid valve is requested. Common ICF configurations for this kind of application:
ICF20-6-1, ICF25-6-1A, ICF32-6-1B, ICF40-6-1B, ICF20-4-10/H, ICF25-4-10, ICF32-4-10, ICF40-4-10.
Depending on capacity and size **ICF 32-6-1A with 32mm butt weld DIN connection**, code number **027L4006** could be used.

Example A

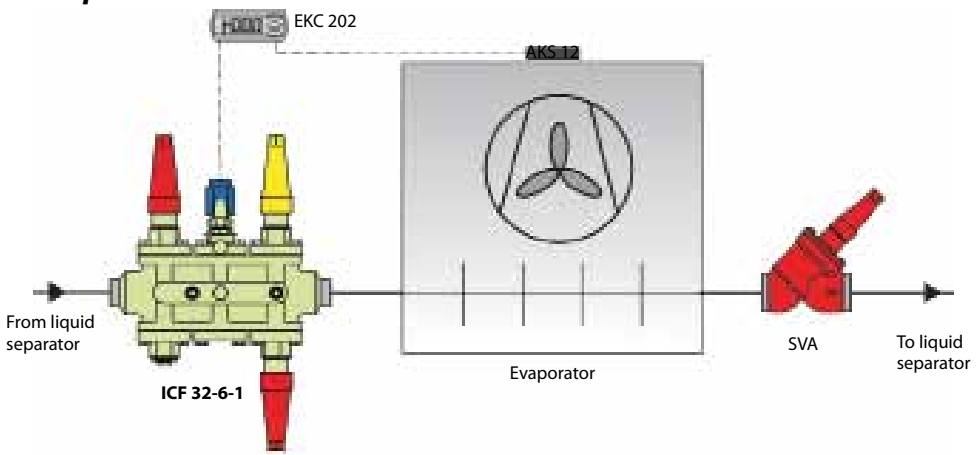

Not all valves are shown. Not to be used for construction purposes.

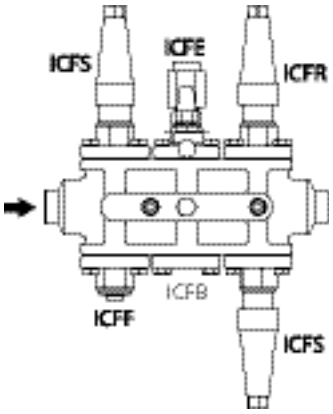

ICF32-6-1A
027L4006

Application example B

Evaporator with soft opening gas powered valve PMLX in the suction line and hot gas defrost featuring: **ICF pumped liquid** and ICF Hot gas valve stations. ICS+CVP as a defrost regulator (OFV optional depending on capacity).
ICF pumped liquid configurations vary according to capacity and size: ICF20-6-2, ICF20-6-3H, ICF25-6-3A, ICF32-6-3B, ICF40-6-3B.
Depending on capacity and size **ICF 20-6-2 with 25mm butt weld DIN connections**, code number **027L3011** could be used.

On the same evaporator ICF Hot gas Valve station with side port to power PMLX/GPLX. Depending on capacity: ICF20-4-9, ICF20-4-9H, ICF25-4-9, ICF32-4-9, ICF40-4-9.
Depending on capacity and size **ICF 20-4-9 with 32 mm DIN butt weld connections**, code number **027L3068** could be used.

Example B

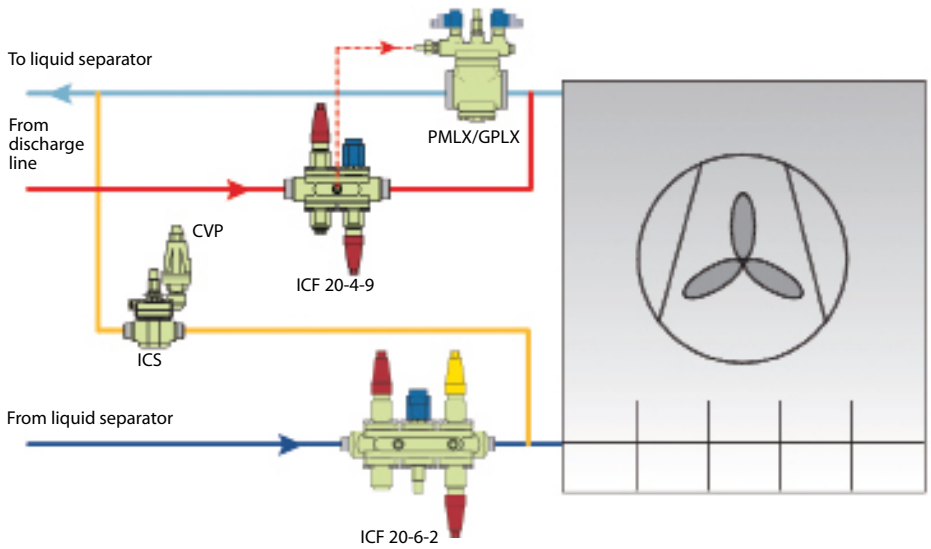

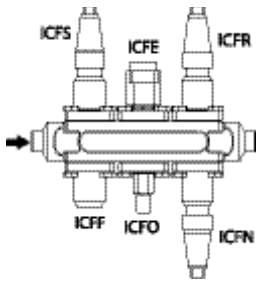

ICF 20-6-2
027L3011

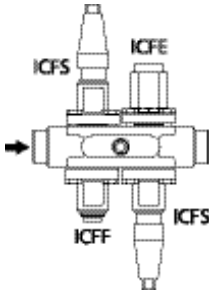

ICF 20-4-9
027L3068

Not all valves are shown. Not to be used for construction purposes.

Application example C

A valve combination for liquid injection to separator with electronic injection valve is required. It is requested to have a solenoid valve in front of the control valve.
Depending on capacity and size **ICF 32-6-5A with 32 mm socket weld connections**, code number **027L4044** could be used.

Example C

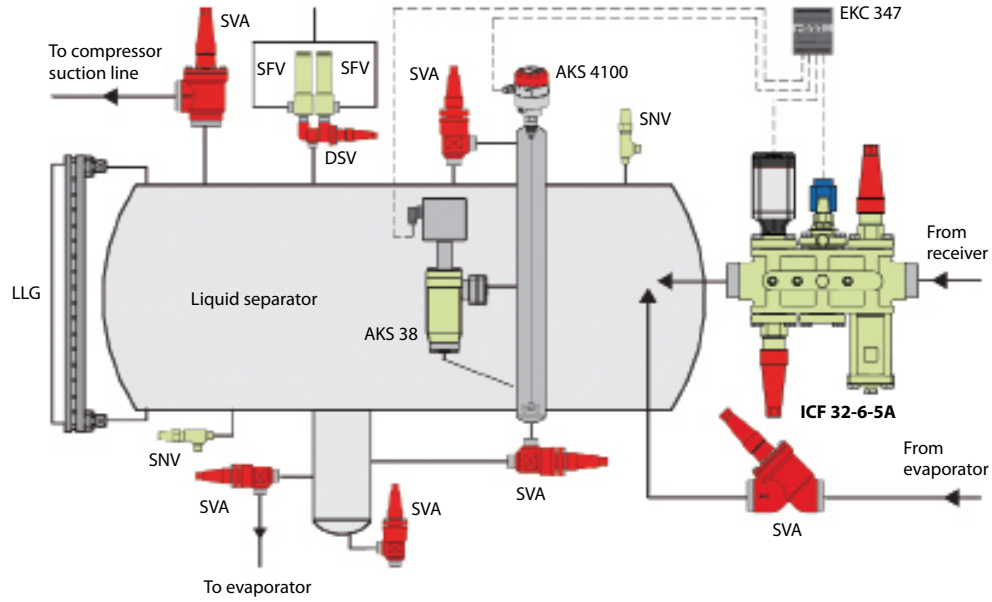

Not all valves are shown. Not to be used for construction purposes.

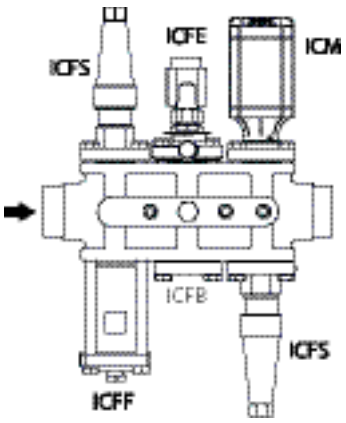

ICF 32-6-5A
027L4044

Application example D

A valve combination for compressor liquid injection with electronic injection valve is required. It is a required to have a solenoid valve in front of the control valve.
For this application **ICF 20-6-5** is recommended. Verify cone size (A33;A;B66;B) of motorized valve based on compressor side port inlet pressure, oil rejection capacity and liquid inlet pressure. Depending on capacity and size **ICF 20-6-5B with 25 DIN butt well connection**, code number **027L3042** could be used.

Example D

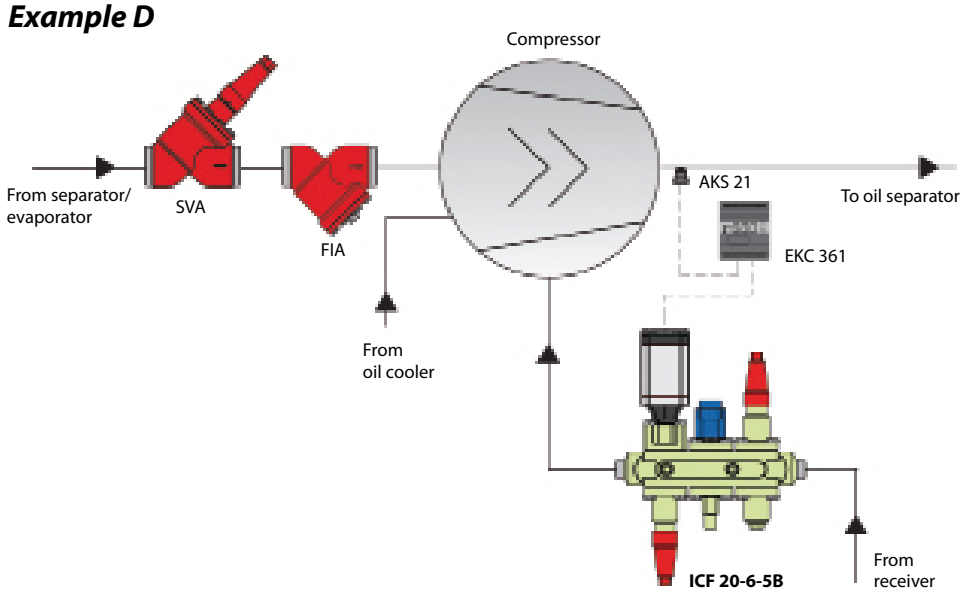

Not all valves are shown. Not to be used for construction purposes.

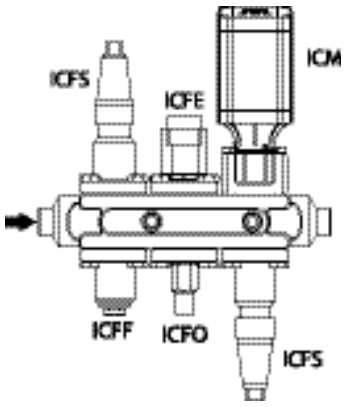

ICF 20-6-5B
027L3042

Application example E

A valve combination for an electronically controlled DX evaporator without hotgas defrost is required.
Depending on capacity and size **ICF 20-6-6 with 20mm DIN butt weld connections**, code number **027L3053** could be used.

Example E

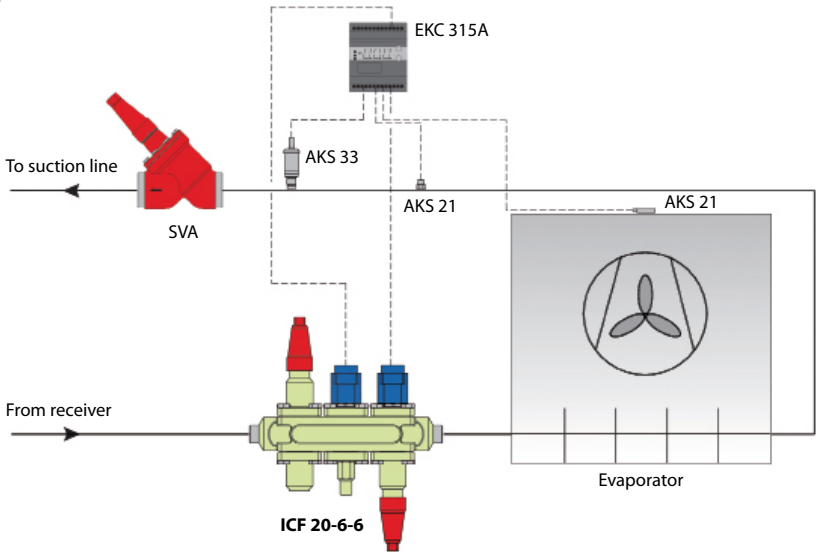

Not all valves are shown. Not to be used for construction purposes.

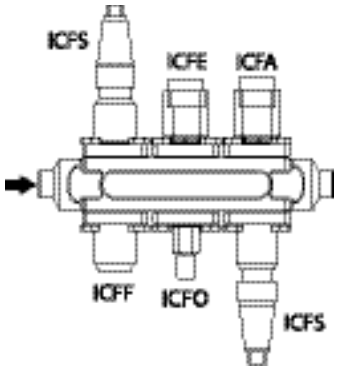

ICF 20-6-6
027L3053

Notes

AKS 4100/4100U – Liquid level sensors

The AKS 4100/4100U liquid level sensor is designed specifically to measure liquid levels in a wide range of refrigeration applications.
The liquid level sensor is based on a proven techhology called Time Domain Reflectometry (TDR) or Guided Micro Wave.
AKS 4100/4100U liquid level sensor can be used to measure the liquid level of many different refrigerants in vessels, accumulators, receivers, standpipes, etc.

Advantages and features

- Approved and qualified by Danfoss for refrigeration applications
- One product covering several probe lengths (cable version)
- A single product for all commonly used refrigerants (cable version)
- Cable version requires less top-end clearance for installation and service
- Proven operation with all refrigerants in combination with oil
- No need to clean cable version when fully covered by oil
- The cable version is very compact and easy to handle, ship, install and use with different lengths and refrigerants
- Changes of the liquid dielectric constant (εr) do not affect operation.
- 5000 mm (197 in.) probe length with cable version
- 2-wire loop powered; no separate transformer needed
- Multi language HMI.
  Level and setting readout in mm,cm,m(ft, in.)

Technical data

Supply Voltage	14-30 V d.c. Min/Max. Value for an output of 22 mA at the terminal.	
Ambient temperature supply voltage limitations	-40°C/+80°C(–40°F / +176°F) : 16-30 V d.c. -20°C/+80°C(–4°F / +176°F) : 14-30 V d.c.	
Load	RL [Ω] ≤ ((Uext -14 V)/20 mA) – Default (Error output set to 3.6 mA) RL [Ω] ≤ ((Uext -14 V)/22 mA) – (Error output set to 22 mA)	
Cable gland	AKS 4100 PG 13, M20×1.5 ; (cable diameter: 6-8 mm (0.24-0.31in.) AKS 4100U ½ in. NPT	
Refrigerant temperature	–60°C/100°C (–76°F/212°F)	
Ambient temperature	–40°C / +80°C (–40°F / +176°F) For HMI : –20°C / +60°C (–4°F / +140°F)	
Process pressure	–1 barg / 100 barg (–14.5 psig / 1450 psig)	
Terminals (spring loaded)	0.5-1.5 mm^2 (~20-15 AWG)	
Enclosure:	IP66/67 (~NEMA type 4X)	
Mechanical connection Cable version/Coaxial version	AKS 4100:	G1 in. pipe thread. Aluminium gasket included
	AKS 4100U:	¾ in. NPT
Refrigerants	The listed refrigerants are qualified and approved by Danfoss	
	R717 / NH_3	–40°C / +50°C (–40°F / +122°F)
	R744 / CO_2	–50°C / +15°C (–58°F / +59°F)
	HCFC:	R22 –50°C / +48°C (–58°F / +118°F)
	HFC:	R404A –50°C/ +15°C (–58°F / +59°F) R410A –50°C /+15°C (–58°F / +59°F) R134a –40°C /+50°C (–40°F /+122°F)
The listed refrigerants may be used in the complete temperature range of AKS 4100/4100U, however, the accuracy may be affected if the above listed temperature range is exceeded.		
Other refrigerants within the groups of HCFC and HFC can be detected and measured if the following conditions are fulfilled:		
Reference conditions	Dielectric constant Cable version to be used in R717 / NH3, HCFC and HFC εr, liquid > 5.6	
The coaxial version is mandatory for R744 / CO_2 εr, liquid > 1.3 and marine applications.		
The coaxial version can also be used R717 / NH_3, HCFC and HFC.		

Ordering

Cable version - AKS 4100/4100U

Description	Code number With HMI	Code number Without HMI*
AKS 4100 with 5 m (197 in.) Ø2 mm (Ø0.08 in.) stainless cable and counterweight	084H4501	084H4500
AKS 4100U with 5 m (197 in.) Ø2 mm (Ø0.08 in.) stainless cable and counterweight	084H4521	084H4520

Coaxial version - AKS 4100/4100U (available in predefined lengths, with or without HMI)

Description	Probe length		Code number With HMI	Code number Without HMI*
	mm	in.		
AKS 4100 - Coaxial	500		084H4510	084H4503
AKS 4100 - Coaxial	800		084H4511	084H4504
AKS 4100 - Coaxial	1000		084H4512	084H4505
AKS 4100 - Coaxial	1200		084H4513	084H4506
AKS 4100 - Coaxial	1500		084H4514	084H4507
AKS 4100 - Coaxial	1700		084H4515	084H4508
AKS 4100 - Coaxial	2200		084H4516	084H4509
AKS 4100U - Coaxial		19.2	084H4530	084H4524
AKS 4100U - Coaxial		30	084H4531	084H4525
AKS 4100U - Coaxial		45	084H4532	084H4526
AKS 4100U - Coaxial		55	084H4533	084H4527
AKS 4100U - Coaxial		65	084H4534	084H4528
AKS 4100U - Coaxial		85	084H4535	084H4529

Accessories

Description	Code number
AKS 4100/4100U HMI Service/Display unit with rear cover and mounting bracket	084H4540
AKS 4100/4100U HMI Display	084H4548

Description	Code number
AKS 4100/4100U Signal Converter **without** HMI, excluding cable gland	084H4541

* When ordering without HMI please observe:
Each AKS 4100/AKS 4100 must always be programmed via the HMI display unit.

The HMI display unit can be ordered separately and there are two possibilities:
- 084H4540 AKS 4100/4100U HMI display unit with rear cover and mounting bracket. The mounting bracket is very useful when the AKS 4100/4100U have to be programmed. The same AKS 4100/4100U HMI display unit can be used to programme more AKS 4100/4100U and both Cable and Coaxial versions.
- 084H4548 AKS 4100/4100U HMI display unit (usually spare part).

Notes

WVFX, WVO and WVS – Pressure controlled water valves

Water regulating valves type WVFX, WVO and WVS are used to regulate the flow of water in refrigeration plant with water-cooled condensers.
The water valve modulates the water flow to maintain the condensing pressure at a constant level during operation. When the refrigeration plant is stopped, the cooling water flow is shut off automatically.
Valves guarantee constant proportional regulation of condensing pressure.

Features

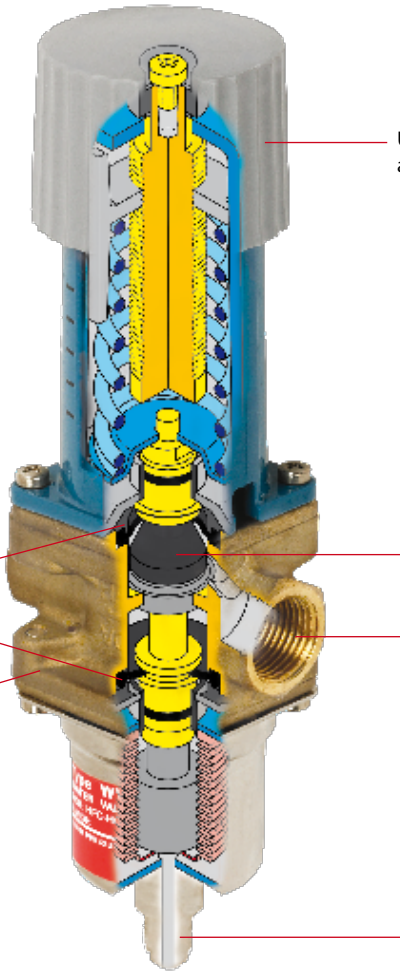

Applications	Advantages	Facts
· Traditional refrigeration · Air conditioning units · Other applications with water-cooled condenser	· WVFX 10 - 25 can be supplied in stainless steel housing for sea water applications. · Exact pressure control - high accuracy of WVO valves up to 0.2 bar. · Reliable design - factory setting is maintained during whole life cycle · Insensitive to dirt - fit and forget solution · High permissible water pressure (MWP) - 16 bar - can be used with water towers. · Low flow version - 0,63 m^3/h (available on request)	· Below 20% of max. capacity the WVS valves will act as an on-off regulators. · WVFX 10 → 40 are direct actuated valves. · WVS 32 → 100 are servo-operated valves. · Max. condensing pressure up to 45.2 bar · Very wide media temperature range from -25 up to 130 °C · Versions with capillary tube available on request

Technical data and ordering

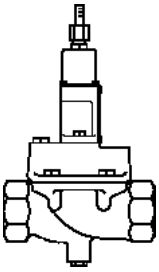

[1]) Code numbers cover valve body, flange gaskets, flange bolts and screws for pilot valve.
[2]) Code numbers cover control element and spring housing.
[3]) Code numbers cover an inlet and an outlet flange.

Media temperature range
WVFX 10 - 25: –25 - +130 °C
WVFX 32 - 40: –25 - +90 °C
WVS: –25 - +90 °C

Opening differential pressure
WVO 10 - 25: 0 - 10 bar
WVFX 10 - 40: 0 - 10 bar
WVS 32 - 40: 0.5 - 4bar
WVS 50 - 100: 0.3 - 4 bar

WVFX, commercial applications

Type	Connection		Range (refrigerant)	Code no.
	Water side ISO 228-1	Condenser side	bar	
WVFX 10	G 3/8	1/4 in. / 6 mm flare	3.5 - 16	003N1100
WVFX 10	G 3/8	1/4 in. / 6 mm flare	4.0 - 23	003N1105
WVFX 15	G 1/2	1/4 in. / 6 mm flare	3.5 - 16	003N2100
WVFX 15	G 1/2	1/2 in. / 1 mm SAE flare	4.0 - 23	003N2205
WVFX 15	G 1/2	1/4 in. / 6 mm flare	4.0 - 23	003N2105
WVFX 20	G 3/4	1/4 in. / 6 mm flare	3.5 - 16	003N3100
WVFX 20	G 3/4	1/4 in. / 6 mm flare	4.0 - 23	003N3105
WVFX 25	G 1	1/4 in. / 6 mm flare	3.5 - 16	003N4100
WVFX 25	G 1	1/4 in. / 6 mm flare	4.0 - 23	003N4105
WVFX 32	G 1 1/4	1/4 in. / 6 mm flare	4.0 - 17	003F1232
WVFX 40	G 1 1/2	1/4 in. / 6 mm flare	4.0 - 17	003F1240

WVFX with stainless steel housing

WVFX 15	G 1/2	1/4 in. / 6 mm flare	3.5 - 16	003N2101
WVFX 15	G 1/2	1/4 in. / 6 mm flare	4.0 - 23	003N2104
WVFX 20	G 3/4	1/4 in. / 6 mm flare	4.0 - 23	003N3104
WVFX 25	G 1	1/4 in. / 6 mm flare	3.5 - 16	003N4101
WVFX 25	G 1	1/4 in. / 6 mm flare	4.0 - 23	003N4104

WVO, commercial applications

WVO 10	G 3/8	1/4 in. / 6 mm flare	8 - 12	003N5203
WVO 10	G 3/8	1/4 in. / 6 mm flare	14 - 18	003N5206
WVO 10	G 3/8	1/4 in. / 6 mm flare	16 - 20	003N5207
WVO 15	G 1/2	1/4 in. / 6 mm flare	14 - 18	003N5216

WVS, parts programme

Type	Connection ISO 228-1	Code no.				
		Valve body	Pilot unit [2])	Pilot unit for R410A and R744 (CO_2) [3])	Flange set [3])	Servo spring for differential pressure range of 1 → 10 bar
WVS 32	G 1 1/4	016D5032	016D1017	016D1018		016D1327
WVS 40	G 1 1/2	016D5040	016D1017	016D1018		016D0575
WVS 50	2 weld flange	016D5050 [1])	016D1017	016D1018	027N3050	016D0576
WVS 65	2 1/2 weld flange	016D5050 [1])	016D1017	016D1018	027N3065	016D0577
WVS 80	3 weld flange	016D5080 [1])	016D1017	016D1018	027N3080	016D0578
WVS 100	4 weld flange	016D5100 [1])	016D1017	016D1018	027N3100	016D0579

Accessories

Description	Code no.
1 m capillary tube 1/4 in. (6 mm) flare coupling nuts at each end	060-017166
Bracket for WVFX 10 → 25	003N0388

Technical data

Type	Condenser side				Liquid side			k_v value[1])
	Refrigerant	Control press. adjustable closing press. bar	Max. working pressure PB bar	Max. test pressure p′ bar	Media	Max. working pressure PB bar	Max. test pressure p′ bar	m^3/h
WVO 10	HCFC, HFC	See ordering	26.4	60	Fresh water, neutral brine, sea water	16	24	1.4
WVFX 10		3.5 - 16	26.4	60		16	24	1.4
WVFX 10		4.0 - 23	26.4	60		16	24	1.4
WVO 15		See ordering	26.4	60		16	24	1.4
WVFX 10		15.0 - 29.0	45.2	60		16	24	1.4
WVFX 15		3.5 - 16.0	26.4	29		16	24	1.9
WVFX 15		4.0 - 23.0	26.4	29		16	24	1.9
WVFX 15		15.0 - 29.0	45.2	60		16	24	1.9
WVFX 20		3.5 - 16.0	26.4	29		16	24	3.4
WVFX 20		4.0 - 23.0	26.4	29		16	24	3.4
WVFX 20		15.0 - 29.0	45.2	60		16	24	3.4
WVFX 25		3.5 - 16.0	26.4	29		16	24	5.5
WVFX 25		4.0 - 23.0	26.4	29		16	24	5.5
WVFX 25		15.0 - 29.0	45.2	60		16	24	5.5
WVFX 32		4.0 - 17.0	24.1	26.5		10	10	11.0
WVFX 40		4.0 - 17.0	24.1	26.5		10	10	11.0
WVS 32	HCFC, HFC R717 (NH_3)	2.2 - 19.0	26.4	29	Fresh water, neutral brine	10	16	12.5
WVS 40		2.2 - 19.0	26.4	29		10	16	21.0
WVS 50		2.2 - 19.0	26.4	29		10	16	32.0
WVS 65		2.2 - 19.0	26.4	29		10	16	45.0
WVS 80		2.2 - 19.0	26.4	29		10	16	80.0
WVS 100		2.2 - 19.0	26.4	29		10	16	125.0

[1]) The k_v value is the flow of water in m^3/h at a pressure drop across valve of 1 bar, $\rho = 1000$ kg/m^3.

AVTA – Thermostatic water regulating valves

Thermostatic water regulating valves are used for proportional regulation of water flow quantity, depending on the setting and the sensor temperature.
The valves are self-acting, i.e. they operate without the supply of auxiliary energy such as electricity, or compressed air.
The required temperature is maintained at constant level with lowest possible water consumption in the condenser.

Features

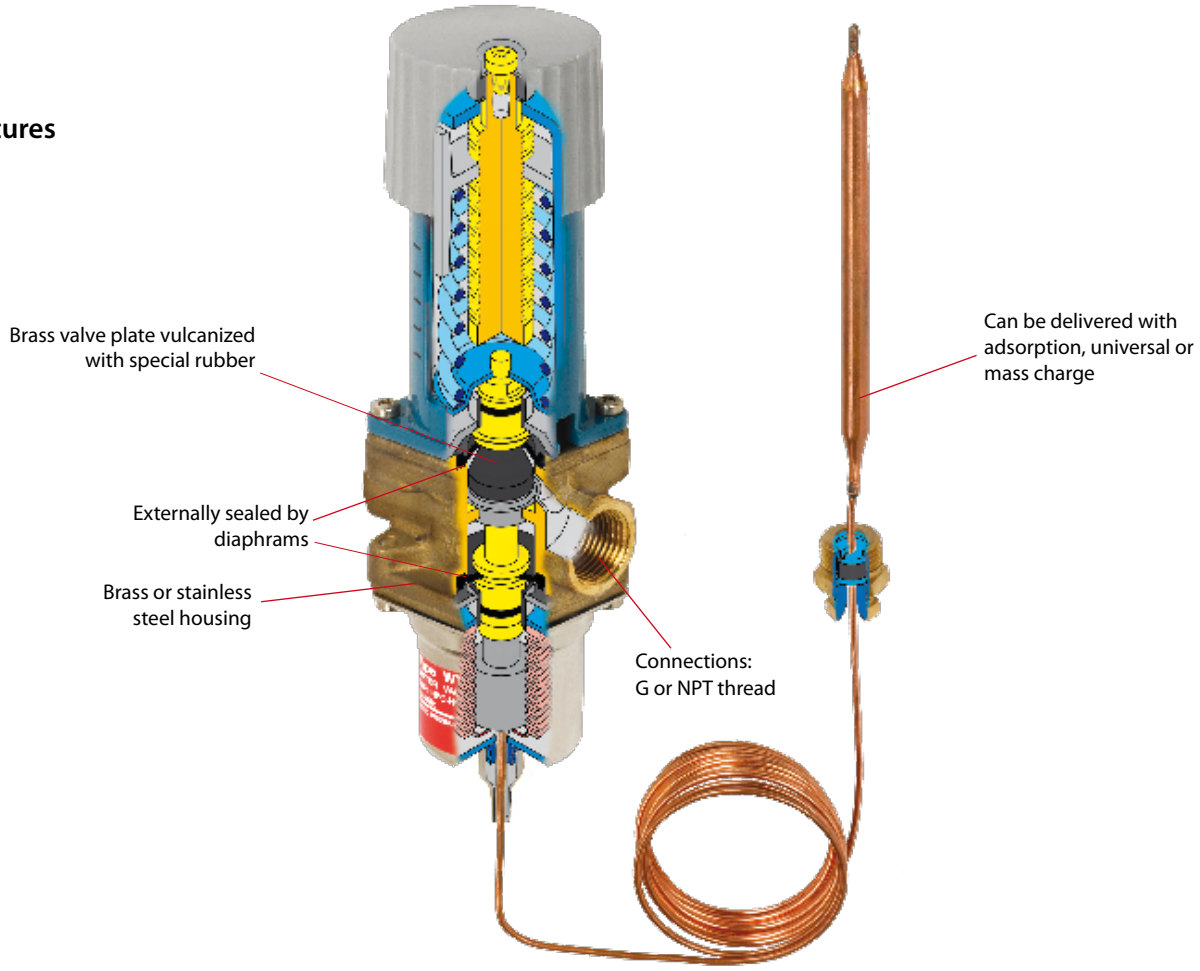

Applications	Advantages	Facts
· Traditional refrigeration with water cooled condenser · Cooling of industrial processes	· Insensitive to dirt – fit and forget solution · Insensitive to pressure variations · Needs no power supply - self acting · The valve can be placed in any position · Operates from zero differential pressure · Unique option of hand regulation	· Differential pressure: 0 to 10 bar · Max. working pressure: 16 bar · Max. pressure on sensor: 25 bar · Opens on rising sensor temperature · The regulation range is defined for the point at which the valve begins to open · AVTA are direct actuated valves

Technical data and ordering

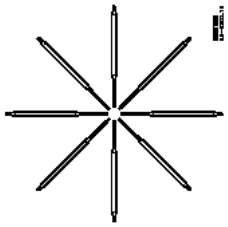

Sensor installation

AVTA with adsorption charge (sensor ∅9.5 × 150 mm)

Connection ISO 228-1	Regulating range [°C]	Max.temp. sensor [°C]	k_v value (m^3/h at Δp = 1 bar)	Capillary tube length [m]	Type	Code no. 1)
G ⅜	+10 - +80 °C	130	1.4	2.3	AVTA 10	003N1144
G ½			1.9		AVTA 15	003N0107
G ¾			3.4		AVTA 20	003N0108
G 1			5.5		AVTA 25	003N0109

1) Code no. covers complete valve incl. capillary tube gland.

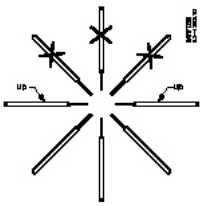

Sensor installation

AVTA with universal charge (sensor ∅18 × 210 mm)

Connection ISO 228-1	Regulating range [°C]	Max.temp. sensor [°C]	k_v value (m^3/h at Δp = 1 bar)	Capillary tube length [m]	Type	Code no. 1)
G ⅜	+0 - +30 °C	57	1.4	2.0	AVTA 10	003N1132
G ½			1.9		AVTA 15	003N2132
G ¾			3.4		AVTA 20	003N3132
G 1			5.5		AVTA 25	003N4132
G ⅜	+25 - +65 °C	90	1.4	2.0	AVTA 10	003N1162
G ½			1.9	2.0	AVTA 15	003N2162
G ½			1.9	2.0 (armoured)	AVTA 15	003N0041
G ¾			3.4	2.0	AVTA 20	003N3162
G ¾			3.4	5.0	AVTA 20	003N3165
G ¾			3.4	2.0 (armoured)	AVTA 20	003N0031
G 1			5.5	2.0	AVTA 25	003N4162
G 1			5.5	2.0 (armoured)	AVTA 25	003N0032
G 1			5.5	5.0	AVTA 25	003N4165
G ⅜	+50 - +90 °C	125	1.4	2.0	AVTA 10	003N1182
G ½			1.9	2.0	AVTA 15	003N2182
G ¾			3.4	2.0	AVTA 20	003N3182
G 1			5.5	2.0	AVTA 25	003N4182

1) Code no. covers complete valve incl. capillary tube gland.

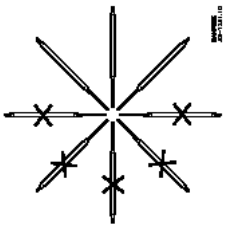

Sensor installation

AVTA with mass charge (sensor ∅9.5 × 180 mm)

Connection ISO 228-1	Regulating range [°C]	Max.temp. sensor [°C]	k_v value (m^3/h at Δp = 1 bar)	Capillary tube length [m]	Type	Code no. 1)
G ½	+0 - +30 °C	57	1.9	2.0	AVTA 15	003N0042
G ¾			3.4		AVTA 20	003N0043
G ½	+25 - +65 °C	90	1.9	2.0	AVTA 15	003N0045
G ½			1.9	2.0 (armoured)	AVTA 15	003N0299
G ½			1.9	5.0	AVTA 15	003N0034
G ¾			3.4	2.0	AVTA 20	003N0046
G 1			5.5	2.0	AVTA 25	003N0047

1) Code no. covers complete valve incl. capillary tube gland.

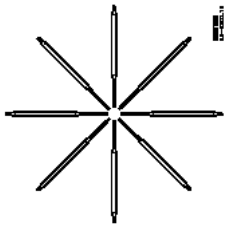

Sensor installation

AVTA in stainless steel with adsorption charge (sensor ∅9.5 × 150 mm)

Connection ISO 228-1	Regulating range [°C]	Max.temp. sensor [°C]	k_v value (m^3/h at Δp = 1 bar)	Capillary tube length [m]	Type	Code no. 1)
G ½	+10 - +80 °C	130	1.9	2.3	AVTA 15	003N2150
G ¾			3.4		AVTA 20	003N3150
G 1			5.5		AVTA 25	003N4150

1) Code no. covers complete valve incl. capillary tube gland.

GBC - Ball valves

GBC ball valves are manually operated shut-off valves suitable for bi-directional flow. Ball valves are used in liquid, suction and hot gas lines in refrigeration, freezing and air conditioning systems. The GBC bi-directional ball valves can be delivered with or without external access port. The valves have one-piece wire seal cap to prevent unintentional cap removal or tampering between services.

Features

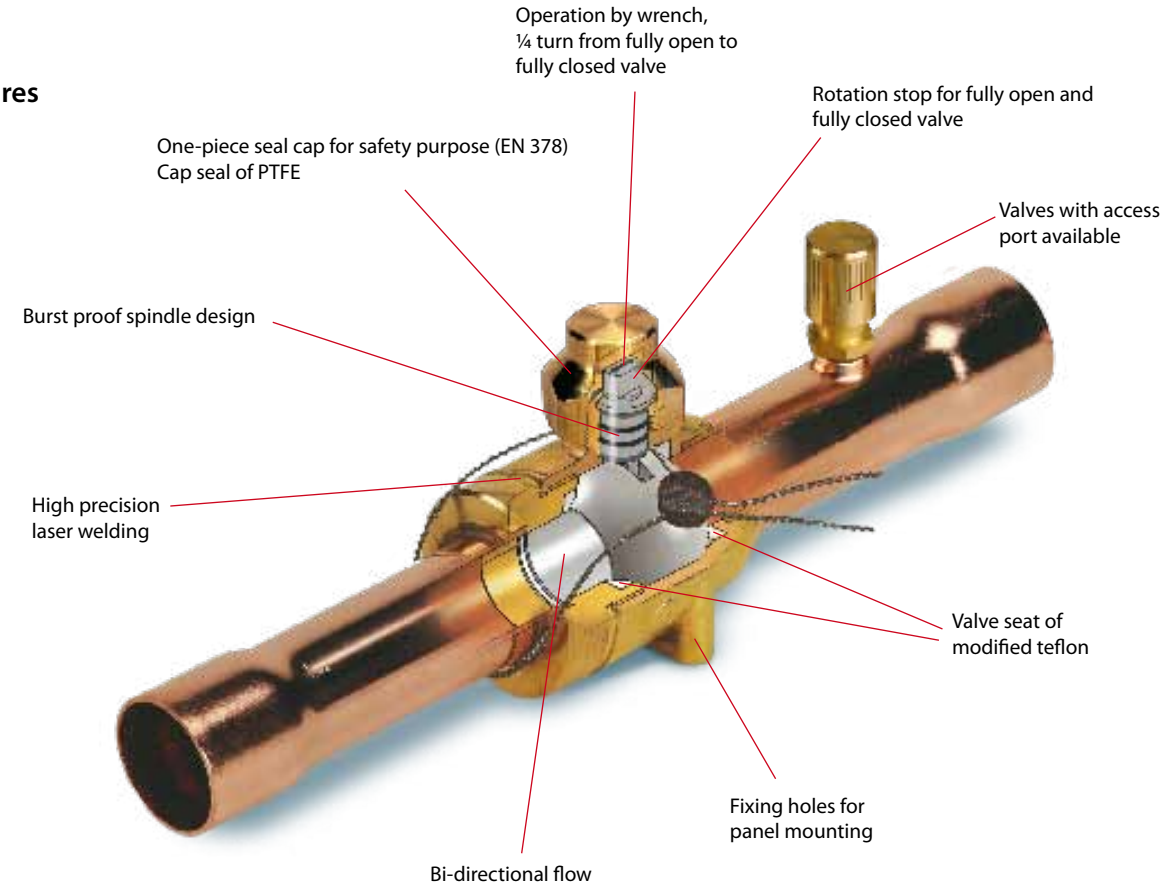

Applications	Advantages	Facts
• GBC valves are used in liquid, suction and hot gas lines in all refrigeration and air-conditioning systems with fluorinated refrigerants	· Full flow with minimum pressure drop · Bi-directional flow, i.e. valve orientation is unimportant · Slimline design ensures easy operational handling · Burst proof spindle design prevents liquid from being trapped internally · Valve seat of modified teflon to secure maximum tightness and a long lifetime · The available access port helps in reducing cost if service of the system is necessary · Ball status indicator on spindle top indicating open or closed position. · Laser welded construction. · Holes for panel mounting.	· GBC can be used for all fluorinated refrigerants (CFC, HCFC, HFC) · Temperature range: -40 to +150 °C · Max. working pressure (PS/MWP) - GBC 6s to 42s with/without access port: 45 bar (650 psig) - GBC 54s without access port: 45 bar (650 psig) - GBC 54s with access port: 35 bar (500 psig) - GBC 67s to 79s with/without access port: 35 bar (500 psig) · Test pressure: 65 bar (940 psig) · Approvals: UL, CE

Ordering

The product range consists of following valve types: one with and one without access port.
Both versions can be supplied in inch or millimeter sizes from 1/4 in. to 3 1/8 in. (6 mm to 79 mm). All valves have holes for panel mounting.

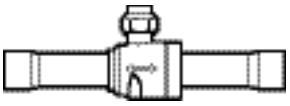

GBC without access port

GBC without access port , ODF/ODF

Type	Solder ODF/ODF connection		Solder ODF/ODF connection		k_v value (calculated value)
	[in.]	Code no.	[mm]	Code no.	[m³/h]
GBC 6s	1/4	009G7020	6	009G7030	1.96
GBC 10s	3/8	009G7021	10	009G7031	5.68
GBC 12s	1/2	009G7022	12	009G7032	10.58
GBC 16s	5/8	009G7023	16	009G7023	14.11
GBC 18s	3/4	009G7024	18	009G7035	20.42
GBC 22s	7/8	009G7025	22	009G7025	28.17
GBC 28s	1 1/8	009G7026	28	009G7033	51.95
GBC 35s	1 3/8	009G7027	35	009G7027	80.89
GBC 42s	1 5/8	009G7028	42	009G7034	121.07
GBC 54s	2 1/8	009G7029	54	009G7029	224.96
GBC 67s	2 5/8	009G7959	67	009G7959	310.00
GBC 67s RP	2 5/8	009G7036	67	009G7036	245.78
GBC 79s	3 1/8	009G7980	79	009G7980	700.00
GBC 79s RP	3 1/8	009G7037	79	009G7037	222.52

RP - Reduced Port

GBC with access port

GBC with access port, ODF/ODF

Type	Solder ODF/ODF connection		Solder ODF/ODF connection		k_v value (calculated value)
	[in.]	Code no.	[mm]	Code no.	[m³/h]
GBC 6s	1/4	009G7050	6	009G7060	1.96
GBC 10s	3/8	009G7051	10	009G7061	5.68
GBC 12s	1/2	009G7052	12	009G7062	10.58
GBC 16s	5/8	009G7053	16	009G7053	14.11
GBC 18s	3/4	009G7054	18	009G7065	20.42
GBC 22s	7/8	009G7055	22	009G7055	28.17
GBC 28s	1 1/8	009G7056	28	009G7063	51.95
GBC 35s	1 3/8	009G7057	35	009G7057	80.89
GBC 42s	1 5/8	009G7058	42	009G7064	121.07
GBC 54s	2 1/8	009G7059	54	009G7059	224.96
GBC 67s	2 5/8	009G7960	67	009G7960	310.00
GBC 67s RP	2 5/8	009G7066	67	009G7066	245.78
GBC 79s	3 1/8	009G7981	79	009G7981	700.00
GBC 79s RP	3 1/8	009G7067	79	009G7067	222.52

RP - Reduced Port

GBC without access port

GBC without access port, ODF/ ODM

Type	Solder ODF/ODM connection		Solder ODF/ ODM connection		k_v value (calculated value)
	[in.]	Code no.	[mm]	Code no.	[m³/h]
GBC 22s	7/8	009G7000	22	009G7000	28.20
GBC 28s	1 1/8	009G7001			52.00
GBC 35s	1 3/8	009G7002	35	009G7002	80.90
GBC 42s	1 5/8	009G7003			121.00
GBC 79s	3 1/8	009G7969	79	009G7969	700.00

GBC with access port

GBC with access port, ODF/ ODM

Type	Solder ODF/ODM connection		Solder ODF/ ODM connection		k_v value (calculated value)
	[in.]	Code no.	[mm]	Code no.	[m³/h]
GBC 79s	3 1/8	009G7970	79	009G7970	700.0

GBC – Ball valve for CO_2

Danfoss ball valves, type GBC for CO_2 are manually operated shut-off valves only for single-flow direction. These ball valves give maximum flow in the fully open position. They are designed for operation within a broad temperature range.

Features

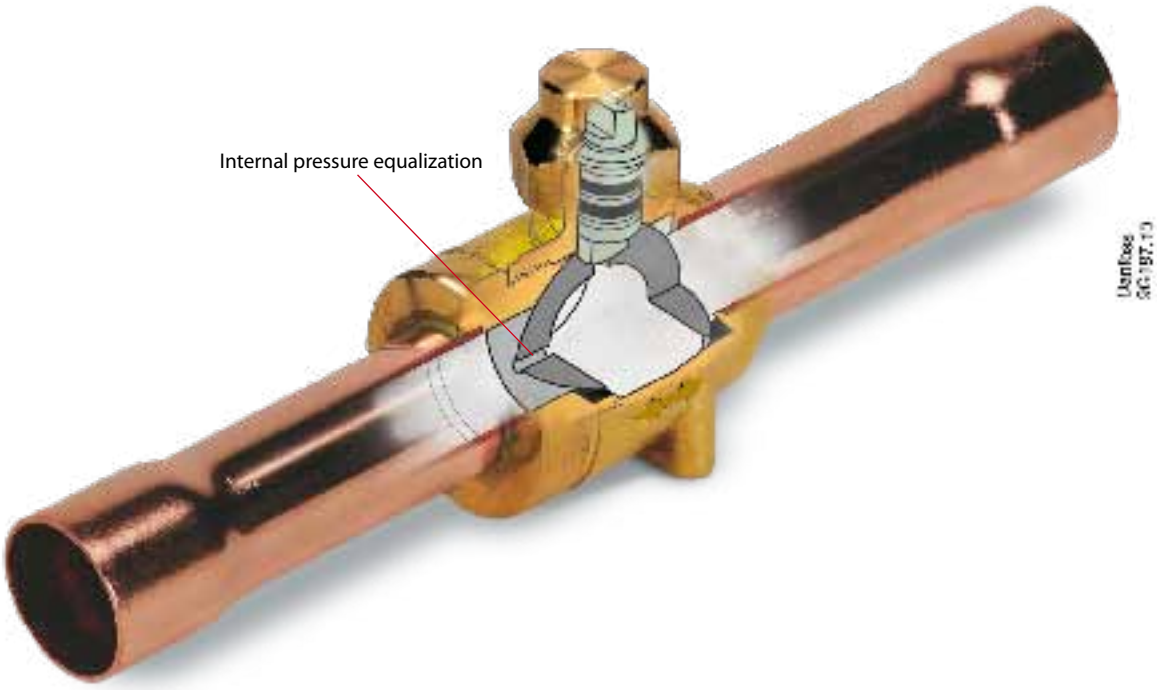

Applications	Advantages	Facts
• The valves can be used for applications in liquid, suction and hot-gas lines in refrigeration and air-conditioning systems.	· Slimline body – easier to install and service · ¼ turn from fully open to fully closed. · Rotation stops at fully open and fully closed positions. · Indicator on spindle top shows degree of opening. · Precision laser welded construction. · Burst-proof spindle design. · Valve seal of low friction, tight-sealing modified PTFE Teflon®. · Drilled and tapped for panel mounting. · To release entrapped liquid via hole in the ball.	· Refrigerants R 744 (CO_2) · Temperature range –40 → +150 °C (–40 → +300 °F) · Max. working pressure (PS/MWP) 45 bar (653 psig) · Max. test pressure 65 bar (943 psig) · Flow direction: Single-flow · Approval: UL, CE

Ordering

The GBC for CO_2 offers the product can be supplied in inch and millimeter sizes from ¼ in. to 1⅝ in. (6 mm to 42 mm).
All valves have holes for panel mounting.

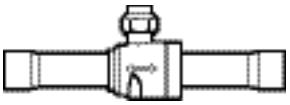

GBC valve ODF/ODF

GBC valve ODF/ODF

Type	Solder ODF/ODF connection				k_v value (calculated value)
	[in.]	Code no.	[mm]	Code no.	[m³/h]
GBC 6s	1/4	009G7520	6	009G7570	1.96
GBC 10s	3/8	009G7521	10	009G7571	5.68
GBC 12s	1/2	009G7522	12	009G7572	10.58
GBC 16s	5/8	009G7523	16	009G7523	14.11
GBC 18s	3/4	009G7524	18	009G7574	20.42
GBC 22s	7/8	009G7525	22	009G7025	28.17
GBC 28s	1 1/8	009G7526	28	009G7576	51.95
GBC 35s	1 3/8	009G7528	35	009G7528	80.89
GBC 42s	1 5/8	009G7529	42	009G7579	121.07

BM – Shut-off valves

The BM is a manual shut-off valve designed for installation in the liquid, suction and hot gas lines of refrigeration plant.

Features

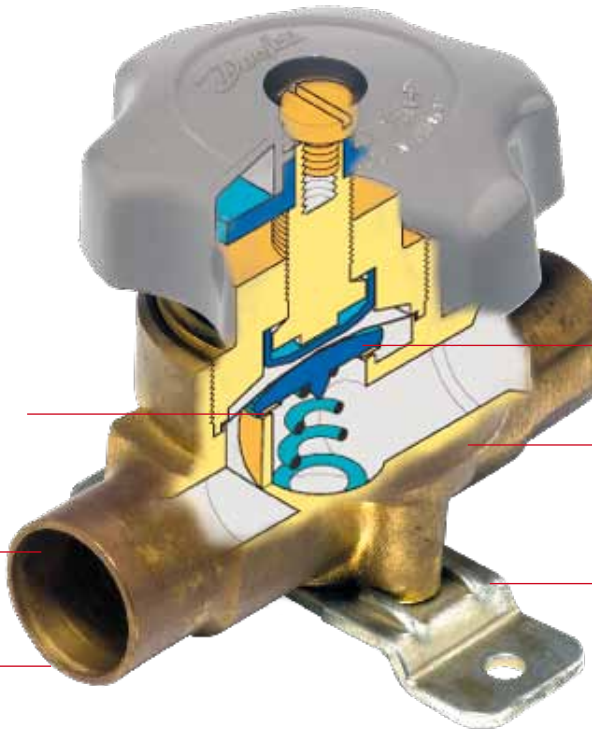

Applications	Advantages	Facts
· Traditional refrigeration	· Fitted with three stainless steel diaphragms which ensure long operating life. · Valve plate of polyamide nylon to give complete shut-off with minimum torque. · Valve cover with counter-seat to prevent the ingress of moisture in fully open position.	· Can be used for all fluorinated refrigerants (CFC, HCFC, HFC) · Temperature range: -55 °C to +100 °C · Max. working pressure PS = 28 bar · Max. test pressure p'= 30.8 bar · Approvals: UL

Technical data and ordering

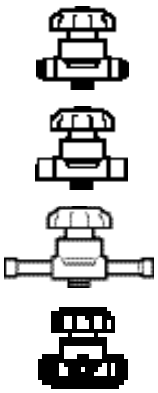

BM with hand wheel

Version	Type	Connection	Code no.			k_v-value m^3/h
			Flare	ODF solder	ODF extended ends	
Straight way	BML 6	¼ in.	009G0101	009G0102	009G0202	0.3
		6 mm		009G0108	009G0208	
	BML 10	⅜ in.	009G0127	009G0122	009G0222	0.84
		10 mm		009G0128	009G0228	
	BML 12	½ in.	009G0141	009G0142	009G0242	1.5
		12 mm		009G0148	009G0248	
	BML 15	⅝ in.	009G0168	009G0162	009G0262	2.2
		16 mm		009G0170		
	BML 18	¾ in.	009G4004	009G0181	009G4009	2.9
		18 mm		009G0184		
	BML 22	⅞ in.		009G0191	009G0291	2.9
		22 mm		009G0194		
Three-way	BMT 6	¼ in.	009G0105			0.3

NRV/NRVH – Check valves

NRV and NRVH check valves can be used in liquid, suction and hot gas lines in refrigeration and air conditioning plants with fluorinated refrigerants. The valves ensure the correct flow direction and prevent back-condensation from a warm part of the system to the cold evaporator. A built-in damping piston makes the valves suitable for installation in lines where pulsation can occur, e.g. in the discharge line from the compressor.

Features

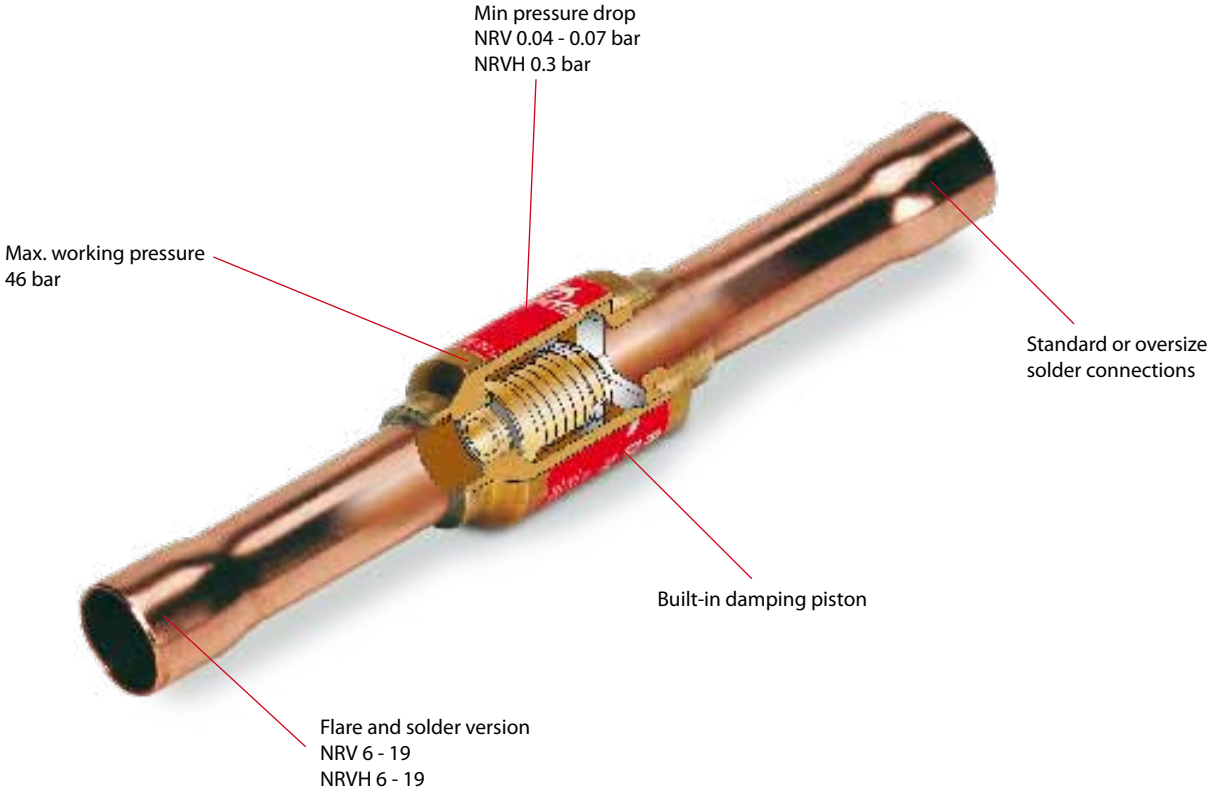

Applications	Advantages	Facts
· Traditional refrigeration · Heat pump systems · Air conditioning units · Liquid coolers · Transport refrigeration · UL approved	· For flourinated refrigerants · Resonance problems can be avoided at partial load in the refrigeration plant. · Oversize connections provide flexibility in use. · Prevents back-condensation from warm to cold system part. · Ensures correct flow direction.	· In refrigeration plants with compressors connected in parallel, it is advantageous to use NRVH, since the spring is stronger than in NRV. · Both straightway and angleway versions. · Max. working pressure PS/MWP = 46 bar · Max. test pressure p' = 60 bar · Temperature of the medium –50 - 140°C / –60 - 285°F

Technical data and ordering

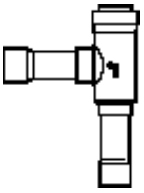

Type	Version		Connection				Pressure drop across valve Δp bar [1]	k_v-value [2] m^3/h	Max. working pressure
			in.		mm				
			Size	Code no.	Size	Code no.			
NRV6	Straight-way	Flare	¼	020-1040	6	020-1040	0.07	0.56	46 bar
NRV 10			⅜	020-1041	10	020-1041		1.43	
NRV 12			½	020-1042	12	020-1042	0.05	2.05	
NRV 16			⅝	020-1043	16	020-1043		3.60	
NRV 19			¾	020-1044	19	020-1044		5.50	
NRV 6s		Solder ODF	¼	020-1010	6	020-1014	0.07	0.56	
NRV 6s [3]			⅜	020-1057	10	020-1050			
NRVH 6s [3]			⅜	020-1069	10	020-1062	0.30		
NRV 10s			⅜	020-1011	10	020-1015	0.07	1.43	
NRVH 10s			⅜	020-1046	10	020-1036	0.30		
NRV 10s [3]			½	020-1058	12	020-1051	0.07		
NRVH 10s [3]			½	020-1070	12	020-1063	0.30		
NRV 12s			½	020-1012	12	020-1016	0.05	2.05	
NRVH 12s			½	020-1039	12	020-1037	0.30		
NRV 12s [3]			⅝	020-1052	16	020-1052	0.05		
NRVH 12s [3]			⅝	020-1064	16	020-1064	0.30		
NRV 16s			⅝	020-1018	16	020-1018	0.05	3.60	
NRVH 16s			⅝	020-1038	16	020-1038	0.30		
NRV 16s [3]			-	-	18	020-1053	0.05		
NRVH 16s [3]			-	-	18	020-1065	0.30		
NRV 16s [3]			¾	020-1059	19	020-1059	0.05		
NRVH 16s [3]			¾	020-1071	19	020-1071	0.30		
NRV 19s			-	-	18	020-1017	0.05	5.50	
NRVH 19s			-	-	18	020-1008	0.30		
NRV 19s			¾	020-1019	19	020-1019	0.05		
NRVH 19s			¾	020-1023	19	020-1023	0.30		
NRV 19s [3]			⅞	020-1054	22	020-1054	0.05		
NRVH 19s [3]			⅞	020-1066	22	020-1066	0.30		
NRV 22s	Angle-way		⅞	020-1020	22	020-1020	0.04	8.50	
NRVH 22s			⅞	020-1032	22	020-1032	0.30		
NRV 22s [3]			1⅛	020-1060	28	020-1055	0.04		
NRVH 22s [3]			1⅛	020-1072	28	020-1067	0.30		
NRV 28s			1⅛	020-1021	28	020-1025	0.04	19.00	
NRVH 28s			1⅛	020-1029	28	020-1033	0.30		
NRV 28s [3]			1⅜	020-1056	35	020-1056	0.04		
NRVH 28s [3]			1⅜	020-1068	35	020-1068	0.30		
NRV 35s			1⅜	020-1026	35	020-1026	0.04	29.00	
NRVH 35s			1⅜	020-1034	35	020-1034	0.30		
NRV 35s [3]			1⅝	020-1061	42	020-1027	0.04		
NRVH 35s [3]			1⅝	020-1073	42	020-1035	0.30		

[1] Δp = the minimum pressure at which the valve is completely open.
The NRVH with a stronger spring is used in the discharge line from compressors connected in parallel.
[2] The k_v value is the flow of water in m^3/h at a pressure drop across valve of 1 bar, $\rho = 1000$ kg/m^3.
[3] Oversize connections.

DCL – Liquid line filter driers

The DCL liquid line filter driers protect refrigeration and air conditioning systems from moisture, acids and solid particles thus, eliminating harmful chemical reactions and abrasive impurities.

Features

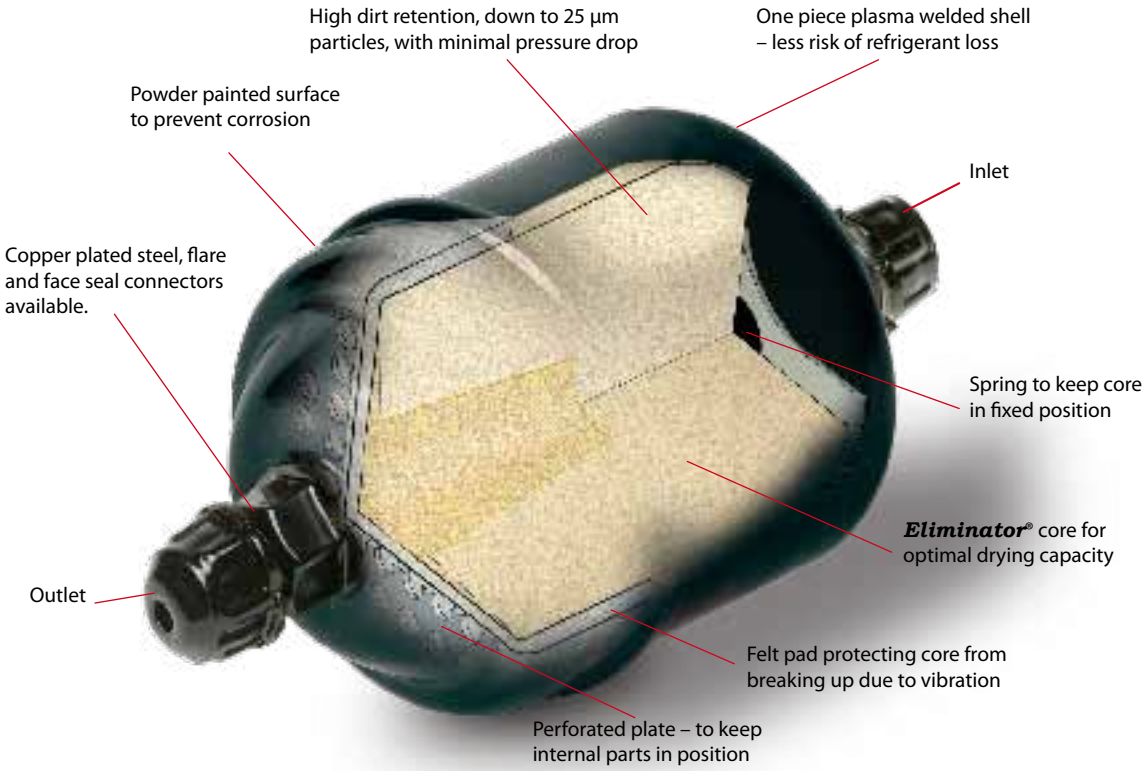

Applications	Advantages	Facts
· Traditional refrigeration · Air conditioning units · Transport refrigeration	· 4 times better moisture adsorption capacity than traditional filter driers with activated alumina, at both high and low humidity levels. · High drying capacity avoiding the risk of acid formation in the refrigeration system. · Copper plated solder connections – no need of wet cloth during installation · Wide range with sizes from 3 to 75 cubic inches. · Powder paint surface for 500 hrs in salt spray (shell body)	· 80% 3Å molecular sieve with 20% activated alumina core. · Optimized for HCFC refrigerants with mineral or alkyl benzene oils and compatible with HFC refrigerants (R134a, R404A, R410A, etc.). · Thermally stable up to 120 °C · Minimal amount of binder, resistant to systems chemicals, assuring a stable core and long life. · MWP (PS): 46 bar (667 psig).

Technical data and ordering

Liquid line filter drier

Type	Connection		Solid core		Drying capacity [kg refrigerant][1])						Liquid capacity in kW[2])			Solder		Flare
			Surface [cm²]	Volume [cm³]	R134a		R404A R507		R22 R407C R410A		R134a	R404A R507	R22 R407C R410A	Code no.	Code no.	Code no.
	mm	in.			24 °C	52 °C	24 °C	52 °C	24 °C	52 °C				in.	mm	
DCL 032	6	1/4	82	41	4.5	4	7	3.5	4	3.5	7	5	7	023Z4501[3])	023Z4500[3])	023Z5000[3])
DCL 033	10	3/8									17	13	19	023Z4504	023Z4503	023Z5001[3])
DCL 052	6	1/4	95	67	6.5	6	10	5.5	6	5.5	7	5	8	023Z4506	023Z4505	023Z5002
DCL 053	10	3/8									18	14	19	023Z4509	023Z4508	023Z5003
DCL 082	6	1/4	131	104	10	9	16	8	9.5	9	7	5	8	023Z4511	023Z4510	023Z5004
DCL 083	10	3/8									19	14	21	023Z4514	023Z4513	023Z5005
DCL 084	12	1/2									26	20	29	023Z4516	023Z4515	023Z5006
DCL 162	6	1/4	220	234	24	22	37	20	22	20	7	5	8	023Z4518	023Z4517	023Z5007
DCL 163	10	3/8									22	16	24	023Z4521	023Z4519	023Z5008
DCL 164	12	1/2									30	22	33	023Z4523	023Z4522	023Z5009
DCL 165	16	5/8									43	30	47	023Z4524	023Z4524	023Z5010
DCL 166	19	3/4									43	30	47	023Z4525	023Z4525	023Z5011
DCL 303	10	3/8	378	494	47	44	77	41	44	41	21	15	23	023Z4528	023Z4527	023Z0012
DCL 304	12	1/2									31	22	34	023Z4530	023Z4529	023Z0013
DCL 305	16	5/8									45	33	49	023Z4531	023Z4531	023Z0014
DCL 306	19	3/4									62	45	68	023Z4533	023Z4533	023Z0156
DCL 307	22	7/8									62	45	68	023Z4534	023Z4534	-
DCL 414	12	1/2	510	681	65	61	106	56	61	56	32	23	35	023Z4538	-	023Z0102
DCL 415	16	5/8									53	37	58	023Z4539	023Z4539	023Z0103
DCL 417	22	7/8									91	65	100	023Z4540	023Z4540	-
DCL 604	12	1/2	756	988	94	76	150	82	89	82	27	20	31	023Z4544	-	-
DCL 607	22	7/8									75	54	82	023Z4545	023Z4545	-
DCL 609	28	1 1/8									87	64	92	-	023Z4546	-
DCL 757	22	7/8	1019	1363	130	128	212	114	121	112	82	60	90	023Z4548	023Z4548	-
DCL 759	28	1 1/8									94	68	102	023Z4550	-	

[1]) Drying capacity is based on following moisture content test standards before and after drying:
R134a: From 1050 ppm W to 75 ppm W.
If drying to 50 ppm W is required, reduce stated capacities by 15%.
R404A, R507: From 1020 ppm W to 30 ppm W.
R407C: From 1020 ppm W to 30 ppm W.
R410A: From 1050 ppm W to 60 ppm W.
R22: From 1050 ppm W to 60 ppm W in accordance with ARI 710-86

[2]) Given in accordance with ARI 710-86 for t_e = −15 °C (5°F), t_c = 30 °C (85°F) and Δp = 0.07 bar (1 psig).

[3]) Wire mesh in filter drier outlet

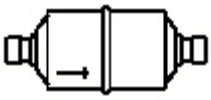

Solder version

Flare version

Flare / solder adapter

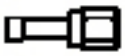

Type	Connection Solder, ODF mm	Code no. for 1 pc	Code no. for 2 pcs.
FSA 22	1/4 × 1/4	023U801266	023U800266
FSA 32	3/8 × 1/4	023U802266	-
FSA 33	3/8 × 3/8	023U801466	023U800466
FSA 44	1/2 × 1/2	023U801666	023U800666
FSA 516m	5/8 × 5/8	023U801766	023U800766
FSA 66	3/4 × 3/4	023U802066	023U801066

Type	Connection Solder, ODF mm	Code no. for 1 pc	Code no. for 2 pcs.
FSA 26m	1/4 × 6	023U8011	023U8001
FSA 36m	3/8 × 6	023U8021	-
FSA 310m	3/8 × 10	023U8013	023U8003
FSA 412m	1/2 × 12	023U8015	023U8005
FSA 516m	5/8 × 16	023U8017	023U8007
FSA 618m	3/4 × 18	023U8019	023U8009

Accessories

Caps	Size	Qty.	Code no.
Gasket B2 - 4 spec.	1/4 in (6 mm)	300	011L4025
B2 - 6	3/8 in (10 mm)	300	011L4017
B2 - 8	1/2 in (12 mm)	200	011L4018

Caps	Size	Qty.	Code no.
B2 -10	5/8 in (16 mm)	100	011L4019
B2 -12	3/4 in (18 mm)	50	011L4020

DML – Liquid line filter driers

The DML liquid line filter driers protect refrigeration and air conditioning systems from moisture, acids and solid particles. The 100% solid molecular sieve core assures a high drying capacity and prevents acid formation in the system.

Features

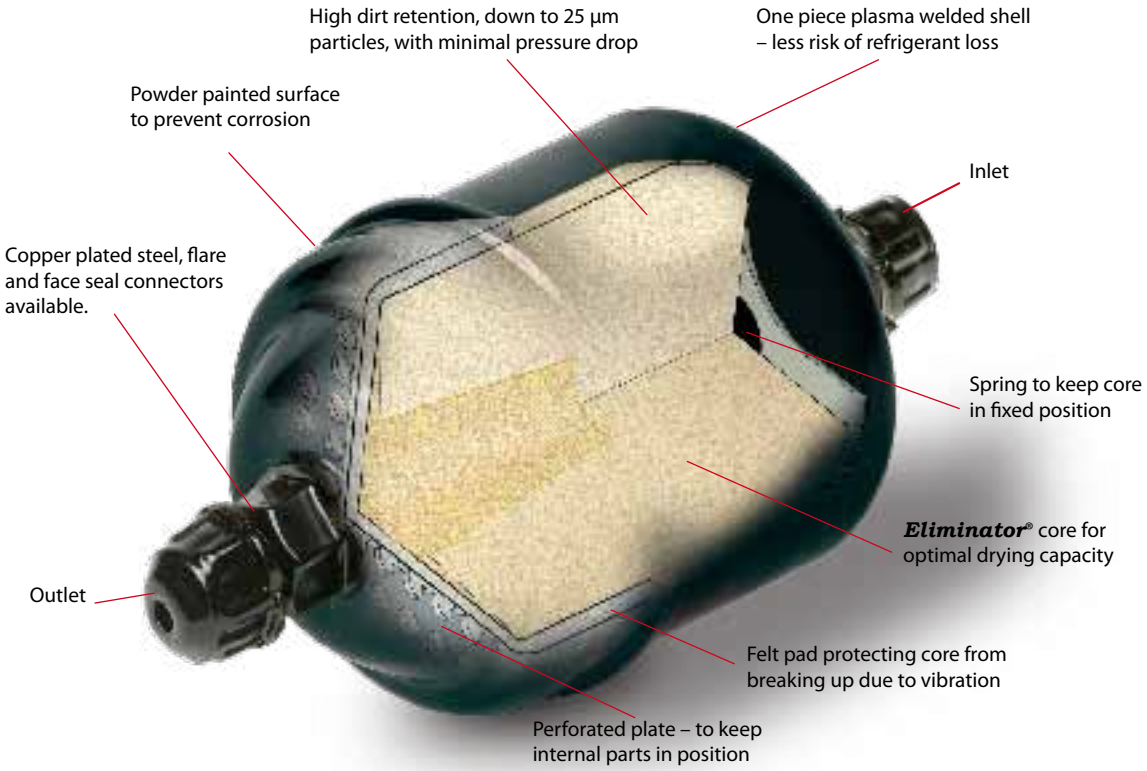

Applications	Advantages	Facts
· Traditional refrigeration · Air conditioning units · Transport refrigeration	· High drying capacity avoiding the risk of acid formation in the refrigeration system. · All Danfoss filter driers have end caps designed for greater protection and easy removal. · Wide range with sizes from 3 to 75 cubic inches. · Powder paint surface for 500 hrs in salt spray (shell body)	· 100% 3Å molecular sieve core. · Optimized for HFC refrigerants (R134a, R404A, R410A, etc.) with POE and PAG oils. Compatible with R22. · MWP (PS): 46 bar (667 psig). · HCFC & HFC refrigerants. · Available with flare- or solder connectors (copper-plated steel). · Wide range with sizes from 3 to 75 cubic inches.

Technical data and ordering

Liquid line filter drier

Type	Connection		Solid core		Drying capacity [kg refrigerant][1]						Liquid capacity in kW[2]			Solder		Flare
			Surface [cm²]	Volume [cm³]	R134a		R404A R507		R22 R407C R410A		R134a	R404A R507	R22 R407C R410A	Code no.	Code no.	Code no.
	in.	mm			24 °C	52 °C	24 °C	52 °C	24 °C	52 °C				in.	mm	
DML 032	1/4	6	82	41	5.5	5	7.5	4.5	4.5	4	7	5	7	023Z4552[3]	023Z4551[3]	023Z5035[3]
DML 033	3/8	10									17	13	19	023Z4555	023Z4554	023Z5036[3]
DML 052	1/4	6	95	67	8.5	8	13	7.5	8	7	7	5	8	023Z4559	023Z4558	023Z5037
DML 053	3/8	10									18	14	19	023Z4562	023Z4561	023Z5038
DML 082	1/4	6	131	104	12.5	12	20	11.5	12.5	11	7	5	8	023Z4567	023Z4566	023Z5039
DML 083	3/8	10									19	14	21	023Z4570	023Z4569	023Z5040
DML 084	1/2	12									26	20	29	023Z4572	023Z4571	023Z5041
DML 085	5/8	16									42	31	46	023Z4573	023Z4573	023Z5073
DML 162	1/4	6	220	234	27	25.5	43.5	24	27	23	7	5	8	023Z4575	023Z4574	023Z5042
DML 163	3/8	10									22	16	24	023Z4578	023Z4577	023Z5043
DML 164	1/2	12									30	22	33	023Z4580	023Z4579	023Z5044
DML 165	5/8	16									43	30	47	023Z4581	023Z4581	023Z5045
DML 166	3/4	19									44	31	48	023Z4582	023Z4582	023Z5046
DML 303	3/8	10	378	494	57	54	92.5	51	57	48.5	21	15	23	023Z4585	023Z4584	023Z0049
DML 304	1/2	12									31	22	34	023Z4587	023Z4586	023Z0050
DML 305	5/8	16									45	33	49	023Z4588	023Z4588	023Z0051
DML 306	3/4	19									62	45	68	023Z4589	023Z4589	023Z0193
DML 307	7/8	22									62	45	68	023Z4590	023Z4590	-
DML 414	1/2	12	510	681	80	75	130	70	80	74	32	23	35	023Z4594	023Z4593	023Z0109
DML 415	5/8	16									53	37	58	023Z4595	023Z4595	023Z0110
DML 417	7/8	22									91	65	100	023Z4596	023Z4596	-
DML 606	3/4	19	756	988	113	107	185	101	114	97	44	32	48	023Z4601	023Z4601	-
DML 607	7/8	22									75	54	82	023Z4602	023Z4602	-
DML 609	1 1/8	28									87	64	95	023Z4604	023Z4603	-
DML 757	7/8	22	1019	1363	160	150	260	140	160	148	82	60	90	023Z4605	023Z4605	-
DML 759	1 1/8	28									94	68	102	023Z4607	023Z4606	-

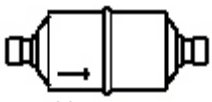

Solder version

Flare version

[1] Drying capacity is based on following moisture content test standards before and after drying:
R134a: From 1050 ppm W to 75 ppm W. If drying to 50 ppm W is required, reduce stated capacities by 15%.
R404A, R507: From 1020 ppm W to 30 ppm W.
R407C: From 1020 ppm W to 30 ppm W.
R410A: From 1050 ppm W to 60 ppm W.
R22: From 1050 ppm W to 60 ppm W in accordance with ARI 710-86.

[2] Given in accordance with ARI 710-86 for t_e = −15 °C (5°F), t_c = 30 °C (85°F) and Δp = 0.07 bar (1 psig).

[3] Wire mesh in filter drier outlet.

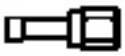

Flare / solder adapter

Type	Connection Solder, ODF mm	Code no. for 1 pc	Code no. for 2 pcs.
FSA 22	1/4 × 1/4	023U801266	023U800266
FSA 32	3/8 × 1/4	023U802266	-
FSA 33	3/8 × 3/8	023U801466	023U800466
FSA 44	1/2 × 1/2	023U801666	023U800666
FSA 516m	5/8 × 5/8	023U801766	023U800766
FSA 66	3/4 × 3/4	023U802066	023U801066

Type	Connection Solder, ODF mm	Code no. for 1 pc	Code no. for 2 pcs.
FSA 26m	1/4 × 6	023U8011	023U8001
FSA 36m	3/8 × 6	023U8021	-
FSA 310m	3/8 × 10	023U8013	023U8003
FSA 412m	1/2 × 12	023U8015	023U8005
FSA 516m	5/8 × 16	023U8017	023U8007
FSA 618m	3/4 × 18	023U8019	023U8009

Accessories

Caps	Size	Qty.	Code no.
Gasket B2 - 4 spec.	1/4 in (6 mm)	300	011L4025
B2 - 6	3/8 in (10 mm)	300	011L4017
B2 - 8	1/2 in (12 mm)	200	011L4018

Caps	Size	Qty.	Code no.
B2 -10	5/8 in (16 mm)	100	011L4019
B2 -12	3/4 in (18 mm)	50	011L4020

DCR – with replaceable solid core

DCR filter driers protect refrigeration, freezing and air conditioning systems from moisture, acids and solid particles. DCR filter driers, with exchangeable solid core, are for use in liquid and/or suction lines.
DCR filter driers are available both in high-pressure versions suitable for plants with R410A and CO_2 refrigerants, and in standard-pressure versions for use with fluorinated refrigerants.

Features

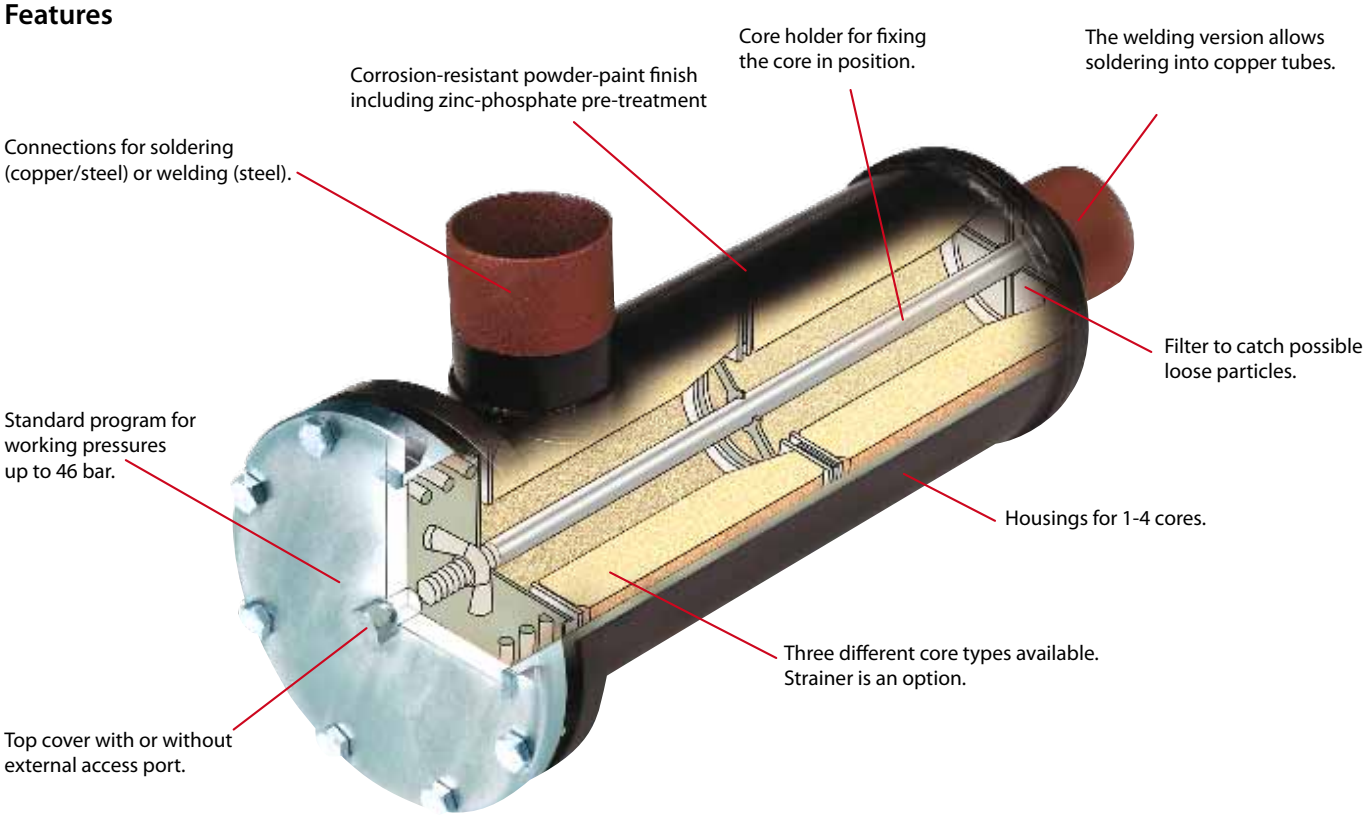

Applications	Advantages	Facts
· For refrigeration plants with fluorinated refrigerants or CO_2.	· Highly efficient dirt retaining capabilities on both the suction and the liquid line. · Can be used in all environments, corrosion resistant powder-painted finish in shell (body) for 500 hrs in salt spray, according to ASTM B117, ISO 12944-6 (Blistering). · The core holder requires minimum free space to remove the core for replacement. · For convenient filter drier commissioning, cover is designed to remain in place while cores, cover and housing are assembled. · Can be installed in any position.	· **48 - DM** core for liquid line application (100% molecular sieve for HFC). Provides high moisture adsorption at low and high condensing temperatures. Effective protection against impurities. · **48 - DC** core for liquid line application (80% molecular sieve and 20% activated alumina for HCFC). Effectively adsorbs moisture and acid in the system. · **48 - DA** core for suction line after a compressor burn-out (30% molecular sieve and 70% activated alumina for HCFC/HFC). · **48 - F** strainer - compatible with all refrigerants: - Retains dirt particles larger than 15 µm. - For use direct in DCR housings. - Utilized in the suction or liquid line.

Capacities

DCR with 48-DM core

Type	Number of cores	Drying capacity [kg refrigerant] [1]						Liquid capacity [kW] [2]		
		R134a		R404A/R507		R407C/R410A		R134a	R404A/R507	R407C/ R410A
		24 °C	52 °C	24 °C	52 °C	24 °C	52 °C			
DCR 0485	1	82.5	78.5	135.0	74.0	83.0	71.0	79	57	88
DCR 0487								139	99	153
DCR 0489								186	133	206
DCR 04811								227	162	259
DCR 04813								227	162	259
DCR 04817								227	162	259
DCR 04821								227	162	259
DCR 0967	2	165.0	157.0	270.0	148.0	166.0	142.0	140	100	155
DCR 0969								217	155	240
DCR 09611								295	211	326
DCR 09613								358	256	396
DCR 09617								358	256	396
DCR 1449	3	247.5	235.5	405.0	222.0	249.0	213.0	226	162	250
DCR 14411								356	255	394
DCR 14413								356	255	394
DCR 14417								356	255	394
DCR 19211	4	330.0	314.0	540.0	296.0	332.0	284.0	372	266	411
DCR 19213								460	329	509
DCR 19217								460	329	509

DCR with 48-DC core

Type	Number of cores	Drying capacity [kg refrigerant] [1]								Liquid capacity [kW] [2]			
		R22		R134a		R404A/R507		R407C/R410A		R22	R134a	R404A/ R507	R407C/ R410A
		24 °C	52 °C	24 °C	52 °C	24 °C	52 °C	24 °C	52 °C				
DCR 0485	1	67.0	62.0	71.0	67.5	115.0	62.0	70.5	60.0	88	79	57	88
DCR 0487										153	139	99	153
DCR 0489										206	186	133	206
DCR 04811										259	227	162	259
DCR 04813										259	227	162	259
DCR 04817										259	227	162	259
DCR 04821										259	227	162	259
DCR 0967	2	134.0	124.0	142.0	135.0	230.0	124.0	141.0	120.0	155	140	100	155
DCR 0969										240	217	155	240
DCR 09611										326	295	211	326
DCR 09613										396	358	256	396
DCR 09617										396	358	256	396
DCR 1449	3	201.0	186.0	213.0	202.5	345.0	186.0	211.5	180.0	250	226	162	250
DCR 14411										394	356	255	394
DCR 14413										394	356	255	394
DCR 14417										394	356	255	394
DCR 19211	4	268.0	248.0	284.0	270.0	460.0	248.0	282.0	240.0	411	372	266	411
DCR 19213										509	460	329	509
DCR 19217										509	460	329	509
DCR 19221										509	460	329	509

[1] Drying capacity is based on the following moisture contents before and after drying:
R22: From 1050 ppm W to 60 ppm W in accordance with ARI 710-86.
R134a: From 1050 ppm W to 75 ppm W. If refrigerant is to be dried to 50 ppm W, reduce the stated capacities by 15%.
R404A, R407C & R507: From 1020 ppm W to 30 ppm W.
R410A: From 1050 ppm W to 60 ppm W.

[2] Liquid capacity given in accordance with ARI 710-2002 evaporating temperature t_e = –15 °C, condensing temperature t_c = +30 °C and pressure drop across filter drier Δp = 0.07 bar.

Capacities

Drying capacity [g of water] [3] — 48-DA

Type	Number of cores	Evaporating temperature t_e [°C]												Acid capacity [4] [g]
		–40	–20	4.4	–30	–20	4.4	–40	–20	4.4	–40	–20	4.4	
		R22			R134a			R404A/R507			R407C/R410A			
DCR 048	1	28	19	12	45	38	27	47	30	19	42	35	25	26.6
DCR 096	2	56	37	24	90	77	54	94	60	37	84	70	50	53.3
DCR 144	3	84	56	36	135	115	81	142	90	56	126	105	75	79.9
DCR 192	4	112	74	48	180	153	108	189	120	75	168	140	100	106.5

[3] Drying capacity is expressed during drying in:
R22: EPD = 10 ppm W, corresponding to a dew point temperature = –50 °C
R134a: EPD = 50 ppm W, corresponding to a dew point temperature = –37 °C
R404A: EPD = 10 ppm W, corresponding to a dew point temperature = –40 °C
R407C: EPD = 10 ppm W, corresponding to a dew point temperature = –40 °C

[4] Adsorption capacity of oleic acid at 0.05 TAN (Total Acid Number).

Recommended plant capacity [kW] [5] in suction line - burn-out — 48-DA

Type	Evaporating temperature t_e [°C]											
	–40	–20	4.4	–30	–20	4.4	–40	–20	4.4	–40	–20	4.4
	Pressure drop [Δp bar]											
	0.04	0.10	0.21	0.04	0.07	0.14	0.04	0.10	0.21	0.04	0.10	0.21
	R22			R134a			R404A/R507			R407C/R410A		
DCR 0485	3.1	8.9	21.0	3.0	5.4	13.0	2.4	7.1	17.5	3.1	8.9	21.0
DCR 0487	5.8	16.1	37.8	5.6	9.9	23.4	4.5	12.9	31.2	5.8	16.1	37.8
DCR 0489	7.8	21.6	50.7	7.5	13.3	31.5	6.0	17.2	41.8	7.8	21.6	50.7
DCR 04811	10.0	27.3	63.3	9.6	16.8	39.5	7.7	21.8	51.9	10.0	27.3	63.3
DCR 04813	10.0	27.3	63.3	9.6	16.8	39.5	7.7	21.8	51.9	10.0	27.3	63.3
DCR 04817	10.0	27.3	63.3	9.6	16.8	39.5	7.7	21.8	51.9	10.0	27.3	63.3
DCR 04821	10.0	27.3	63.3	9.6	16.8	39.5	7.7	21.8	51.9	10.0	27.3	63.3
DCR 0965	3.3	9.1	21.4	3.2	5.7	13.4	2.5	7.4	18.0	3.3	9.2	21.6
DCR 0967	5.8	16.2	38.1	5.6	9.9	23.6	4.5	12.9	31.4	5.8	16.2	38.1
DCR 0969	8.7	24.6	58.3	8.4	15.0	35.9	6.8	19.7	48.1	8.7	24.6	58.3
DCR 09611	11.9	33.4	79.3	11.4	20.4	48.9	9.3	26.8	65.4	11.9	33.4	79.3
DCR 09613	14.1	39.9	95.2	13.6	24.3	58.5	11.0	32.0	78.7	14.1	39.9	95.2
DCR 09617	14.1	39.9	95.2	13.6	24.3	58.5	11.0	32.0	78.7	14.1	39.9	95.2
DCR 09621	14.1	39.9	95.2	13.6	24.3	58.5	11.0	32.0	78.7	14.1	39.9	95.2
DCR 1445	3.5	10.0	22.8	3.4	6.0	14.0	2.7	7.7	18.9	3.5	10.0	22.8
DCR 1447	6.6	18.9	42.9	6.3	11.2	26.4	5.1	14.5	35.6	6.6	18.9	42.9
DCR 1449	8.8	25.1	57.2	8.4	15.0	35.2	6.8	19.4	47.5	8.8	25.1	57.2
DCR 14411	13.2	38.1	92.2	12.7	23.0	56.2	10.3	30.7	76.6	13.2	38.1	92.2
DCR 14413	13.2	38.1	92.2	12.7	23.0	56.2	10.3	30.7	76.6	13.2	38.1	92.2
DCR 14417	13.2	38.1	92.2	12.7	23.0	56.2	10.3	30.7	76.6	13.2	38.1	92.2
DCR 14421	13.2	38.1	92.2	12.7	23.0	56.2	10.3	30.7	76.6	13.2	38.1	92.2
DCR 1925	4.2	11.5	27.3	4.0	7.1	16.8	3.2	9.2	22.7	4.2	11.5	27.3
DCR 1927	7.9	21.6	51.4	7.6	13.4	31.6	6.1	17.4	42.7	7.9	21.6	51.4
DCR 1929	10.6	28.9	68.9	10.2	18.0	42.1	8.2	23.3	57.2	10.6	28.9	68.9
DCR 19211	14.8	41.8	99.4	14.3	25.5	61.2	11.6	33.6	82.2	14.8	41.8	99.4
DCR 19213	18.0	51.1	122.1	17.4	31.1	75.0	14.1	41.1	101.0	18.0	51.1	122.1
DCR 19217	18.0	51.1	122.1	17.4	31.1	75.0	14.1	41.1	101.0	18.0	51.1	122.1
DCR 19221	18.0	51.1	122.1	17.4	31.1	75.0	14.1	41.1	101.0	18.0	51.1	122.1

[5] Recommended plant capacity is given in accordance with ARI-Standard 710-2002 at:
Evaporating temperature t_e = 4.4 °C
Condensing temperature t_c = 32.2 °C

Strainer mounted in suction line — 48-F

Refrigerant	R22			R134a			R404A/R507			R407C/R410A		
Evaporating temperature [°C]	–40	–20	4.4	–30	–20	4.4	–40	–20	4.4	–40	–20	4.4
Pressure drop [Δp bar]	0.04	0.10	0.21	0.04	0.07	0.14	0.04	0.10	0.21	0.04	0.10	0.21
Recommended plant capacity [kW]	15	47	113	15	28	69	12	38	93	15	47	113

Strainer mounted in liquid line [6]

Refrigerant	R22	R134a	R404A/R507	R407C/R410A
Recommended plant capacity [kW]	390	350	260	390

[6] Recommended plant capacity is given in accordance with ARI-Standard 710-2002 at:
Evaporating temperature t_e = –15 °C
Condensing temperature t_c = +30 °C
Pressure drop across filter drier Δp = 0.07 bar

The data given apply to DCR 04811 with 48-F core.

Technical data and ordering

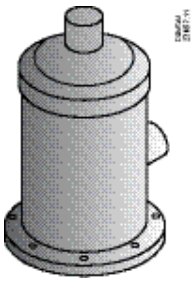

DCR housing incl. top cover

DCR with steel connections

Type	Number of cores	Solder		Butt weld	Code no.	Max. working pressure (PS/MWP)
		ODF in.	ODF mm	in.		
DCR 0485	1	5/8	16	1/2	023U7050	46 bar / 667 psig
DCR 0487		7/8	22	3/4	023U7051	
DCR 0489		1 1/8	-	1	023U7053	
DCR 04811		1 3/8	35	1 1/4	023U7054	
DCR 04813		1 5/8	-	1 1/2	023U7055	
DCR 048117		2 1/8	54	2	023U7057	
DCR 04821		2 5/8	-	2 1/2	023U7076	
DCR 0969	2	-	28	1	023U7059	
DCR 0969		1 1/8	-	1	023U7060	
DCR 09611		1 3/8	35	1 1/4	023U7061	
DCR 09613		1 5/8	-	1 1/2	023U7062	
DCR 09613		-	42	1 1/2	023U7063	
DCR 09617		2 1/8	54	2	023U7064	
DCR 1449	3	-	28	1	023U7065	
DCR 1449		1 1/8	-	1	023U7066	
DCR 14413		1 5/8	35	1 1/4	023U7068	
DCR 14413		-	42	1 1/2	023U7069	
DCR 14417		2 1/8	54	2	023U7070	
DCR 19211	4	1 3/8	35	1 1/4	023U7071	
DCR 19213		1 5/8	-	1 1/2	023U7072	
DCR 19213		-	42	1 1/2	023U7073	

DCR with copper connections

DCR 0485s	1	5/8	16	-	023U7250	46 bar / 667 psig
DCR 0487s		7/8	22	-	023U7251	
DCR 0489s		-	28	-	023U7252	
DCR 0489s		1 1/8	-	-	023U7253	
DCR 04811s		1 3/8	35	-	023U7254	
DCR 04813s		1 5/8	-	-	023U7255	
DCR 04813s		-	42	-	023U7256	
DCR 04817s		2 1/8	54	-	023U7257	
DCR 04821s		2 5/8	-	-	023U7276	
DCR 0969s	2	-	28	-	023U7259	
DCR 09611s		1 3/8	35	-	023U7261	
DCR 09613s		-	42	-	023U7263	
DCR 09617s		2 1/8	54	-	023U7264	
DCR 1449s	3	-	28	-	023U7265	
DCR 14413s		-	42	-	023U7269	
DCR 14417s		2 1/8	54	-	023U7270	
DCR 19213s	4	-	42	-	023U7273	

DCR with high-pressure steel connections

DCR 0487	1	7/8	22	3/4	023U7451	46 bar / 667 psig
DCR 0489		-	28	1	023U7452	
DCR0489		1 1/8	-	1	023U7453	
DCR 04811		1 3/8	35	1 1/4	023U7454	
DCR 04813		1 5/8	-	1 1/2	023U7455	
DCR 048117		2 1/8	54	2	023U7457	
DCR 0967	2	7/8	22	3/4	023U7458	
DCR 0969		-	28	1	023U7459	
DCR 09611		1 3/8	35	1 1/4	023U7461	
DCR 09613		1 5/8	-	1 1/2	023U7462	
DCR 09617		2 1/8	54	2	023U7464	

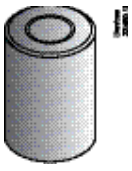

Solid core

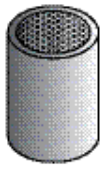

Strainer

DCR inserts with gasket

Type	Material	Code no. 8 pcs.	Code no. 455 pcs.
48-DM solid core	100% molecular sieve	023U1392	023U1394
48-DC solid core	80% molecular sieve & 20% Al_3O_2	023U4381	023U4383
48-DA solid core	30% molecular sieve & 70% Al_3O_2	023U5381	-
48-F strainer	Strainer Insert	023U1921	-

DMB – Bi-flow filter driers

Bi-flow filter driers have built-in check valves which ensure that refrigerant liquid always flows through the filter driers from the outer side of the filter core towards the center. Thus all dirt particles are retained irrespective of flow direction.
DMB filter driers ensure fast and effective adsorption of moisture as well as organic and inorganic acids.

Features

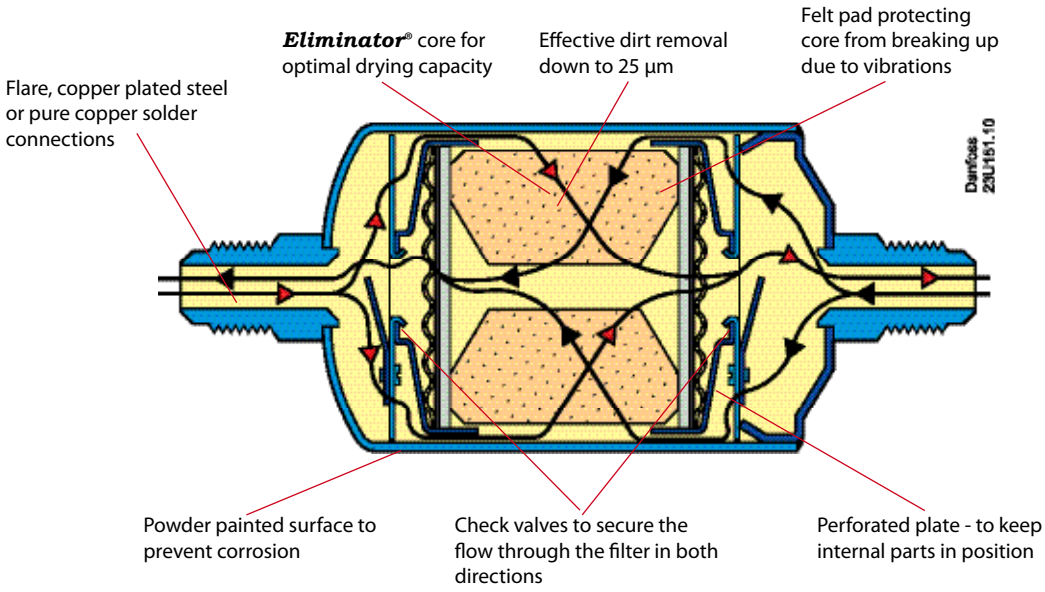

Applications	Advantages	Facts
· Traditional refrigeration · Heat pumps · Air conditioning units	· No dirt released by reversing the flow direction · The check valves are not sensitive to dirt and give minimum restriction, irrespective of flow direction · When building heat pump systems, the use of Bi-flow filters can, save up to ten solder connections. This reduces production costs and the number of potential leakage points.	· DMB filter driers contain a solid core consisting of 100% 3Å Molecular Sieve. · DMB filter driers are especially suitable for heat pumps with HFC refrigerant and polyolester oil with additives · Optimum flow characteristics and dirt retention · Optimized for HFC refrigerants.

Technical data and ordering

Solder, ODF (Cu-plated)

Type	Conn. in.	Code no.	Conn. mm	Code no.
DMB 082s	1/4	023Z1473	6	023Z1461
DMB 083s	3/8	023Z1472	10	023Z1459
DMB 084s	1/2	023Z1471	12	023Z1457
DMB 163s	3/8	023Z1476	10	023Z1455
DMB 164s	1/2	023Z1475	12	023Z1453
DMB 165s	5/8	023Z1474	16	023Z1474
DMB 304s	1/2	023Z1479	12	023Z1451
DMB 305s	5/8	023Z1478	16	023Z1478
DMB 307s	7/8	023Z1477	22	023Z1477

Flare

Type	Conn. in.	mm	Code no.
DMB 082	1/4	6	023Z1412
DMB 083	3/8	10	023Z1411
DMB 084	1/2	12	023Z1410
DMB 162	1/4	6	-
DMB 163	3/8	10	023Z1415
DMB 164	1/2	12	023Z1414
DMB 165	5/8	16	023Z1413
DMB 303	3/8	10	023Z1419
DMB 304	1/2	12	023Z1418
DMB 305	5/8	16	023Z1417

Drying and liquid capacity

R134a, R507, R404A, R407C, R410A, R22

Type	Drying capacity [kg refrigerant] [1]								Liquid capacity [kW] [2]			Max Working Pressure PS [bar]
	R134a		R404A R507		R407C R410A		R22		R134a	R404A R507	R22 R407C R410A	
	24 °C	52 °C	24 °C	52 °C	24 °C	52 °C	24 °C	52 °C				
DMB 082 / 082s	9.2	8.5	8.7	8.1	8.0	7.3	8.7	8.0	3.9	2.8	4.3	46
DMB 083 / 083s									7.4	5.3	8.2	46
DMB 084 / 084s									8.3	6.0	9.2	46
DMB 162	17.8	16.5	16.8	15.7	15.4	14.1	16.8	15.6	7.6	5.3	8.8	46
DMB 163 / 163s									18	13	20	46
DMB 164 / 164s									28	20	32	46
DMB 165 / 165s									37	29	40	46
DMB 303	43.5	40.4	41.4	38.4	37.8	34.6	41.2	38.1	19	15	21	46
DMB 304 / 304s									28	20	31	46
DMB 305 / 305s									38	28	42	46
DMB 307s									43	32	47	46

[1]) Drying capacity is based on following moisture content test standards before and after drying:
R134a: From 1050 ppm W to 75 ppm W. If drying to 50 ppm W is required, reduce stated capacities by 15%.
R404A, R507: From 1020 ppm W to 30 ppm W.
R407C: From 1020 ppm W to 30 ppm W.
R410A: From 1050 ppm W to 60 ppm W.
R22: From 1050 ppm W to 60 ppm W in accordance with ARI 710-86.

[2]) Capacity given in accordance with ARI 710-86
t_e = −15 °C (5°F)
t_c = 30 °C (86°F)
Δp = 0.07 bar (1 psig).

DMC – Combined filter driers and receivers

DMC is a combined receiver and filter drier, and is optimized to systems where the condenser is incapable of containing the total quantity of refrigerants.
DMC filters contain a solid core consisting of 100% Molecular Sieve, and are especially suitable for A/C systems with HFC refrigerant and polyolester oil with additives.

Features

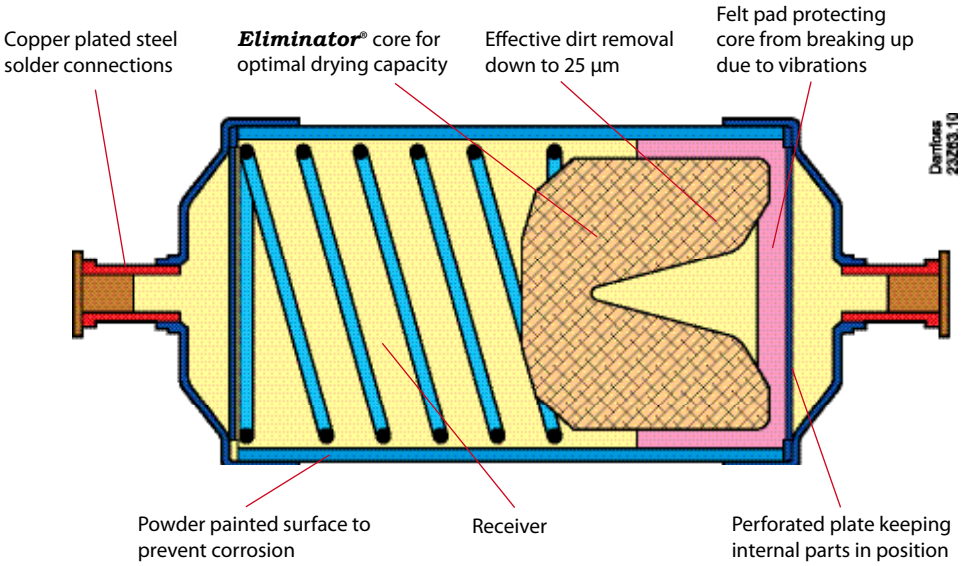

Applications	Advantages	Facts
· Air conditioning systems · Heat pumps	· Combined filter drier and receiver to keep down number of components · Space-saving · Fast installation · High drying capacity at high and low liquid temperatures	· DMC filter driers contain a solid core consisting of 100% 3Å Molecular Sieve. · Available with solder connections (Cu-plated steel connectors). · Optimum flow characteristics and dirt retention. · Optimized for HFC refrigerants. · Approved as HP container according to PED 97/23/EC - a3p3.

Technical data and ordering

Type	Solder, ODF (Cu-plated)	Industrial pack		Type	Solder, ODF (Cu-plated)	Multi pack	
		Code no.	Qty.			Code no.	Qty.
DMC 2032s	6 mm	023Z7007	10	DMC 0432s	6 mm	023Z7019	24
DMC 2032s		023Z7008	10	DMC 0732s	6 mm	023Z7020	24
DMC 2033s		023Z7009	10	DMC 2032s	6 mm	023Z7021	18
DMC 2034s		023Z7010	10	DMC 2032s	-	023Z7022	18
DMC 40164s		023Z7011	6	DMC 2033s	10 mm	023Z7023	18
DMC 0432s	6 mm	023Z7012	16	DMC 2033s	-	023Z7024	18
DMC 0732s	6 mm	023Z7013	16	DMC 2034s	-	023Z7026	18
DMC 2033s	10 mm	023Z7014	10	DMC 40163s	-	023Z7028	8
DMC 2034s	12 mm	023Z7015	10	DMC 40164s	12 mm	023Z7029	8
DMC 40163s	10 mm	023Z7016	6	DMC 40164s	-	023Z7030	8
DMC 40163s		023Z7017	6	-	-	-	-
DMC 40164s	12 mm	023Z7018	6	-	-	-	-
DMC 2032.5s		023Z7044	10	-	-	-	-
DMC 0732s		023Z7045	16	-	-	-	-

Capacity

Drying and liquid capacity

R134a, R507, R404A, R407C, R410A, R22

Type	Drying Capacity (kg of refrigerant)[1]								Liquid Capacity (kW)[2]			Max. Working Pressure PS [bar]
	R410A R407C		R22		R134a		R404A R507		R22 R410A R407C	R134a	R404A R507	
	24 °C	52 °C	24 °C	52 °C	24 °C	52 °C	24 °C	52 °C				
DMC 0432s	5.9	5.4	6.4	5.9	6.4	5.9	6.3	6.0	7.5	7.0	5.0	42
DMC 0732s	5.9	5.4	6.4	5.9	6.4	5.9	6.3	6.0	7.5	7.0	5.0	42
DMC 2032s	5.9	5.4	6.4	5.9	6.4	5.9	6.3	6.0	7.5	7.0	5.0	42
DMC 2033s									21.0	19.0	14.0	
DMC 2034s									26.5	24.0	18.5	
DMC 40163s	25.8	23.7	28.1	26.0	28.3	26.0	27.8	26.2	23.0	21.0	15.0	42
DMC 40164s									28.5	26.0	19.5	

[1]) Drying capacity is based on following moisture content in the refrigerant before and after drying:
R22: From 1050 ppm W to 60 ppm W in accordance with ARI 710-86.
R134a: From 1050 ppm W to 75 ppm W. If drying of refrigerant to 50 ppm W is required, this can be achieved with a 15% reduction of the stated capacities.
R404A, R407C og R507: From 1020 ppm W to 30 ppm W.
R410A: From 1050 ppm W to 60 ppm W.

[2]) Given in accordance with
ARI 710-86 for
t_e = –15 °C (5°F),
t_c = 30 °C (86 °C) and
Δp = 0.07 bar (1 psig).

DAS – Burn-out suction line filter driers

Eliminator® burn-out filter driers type DAS are used in the suction line to clean up refrigeration and AC-systems with flourinated refrigerants after a compressor motor burn-out.
The solid core, which is composed of 70% activated alumina and 30% Molecular Sieve, adsorbs harmful acids as well as moisture. By adsorbing these acids, the DAS burn-out filter drier protects the new compressor against failure.

Features

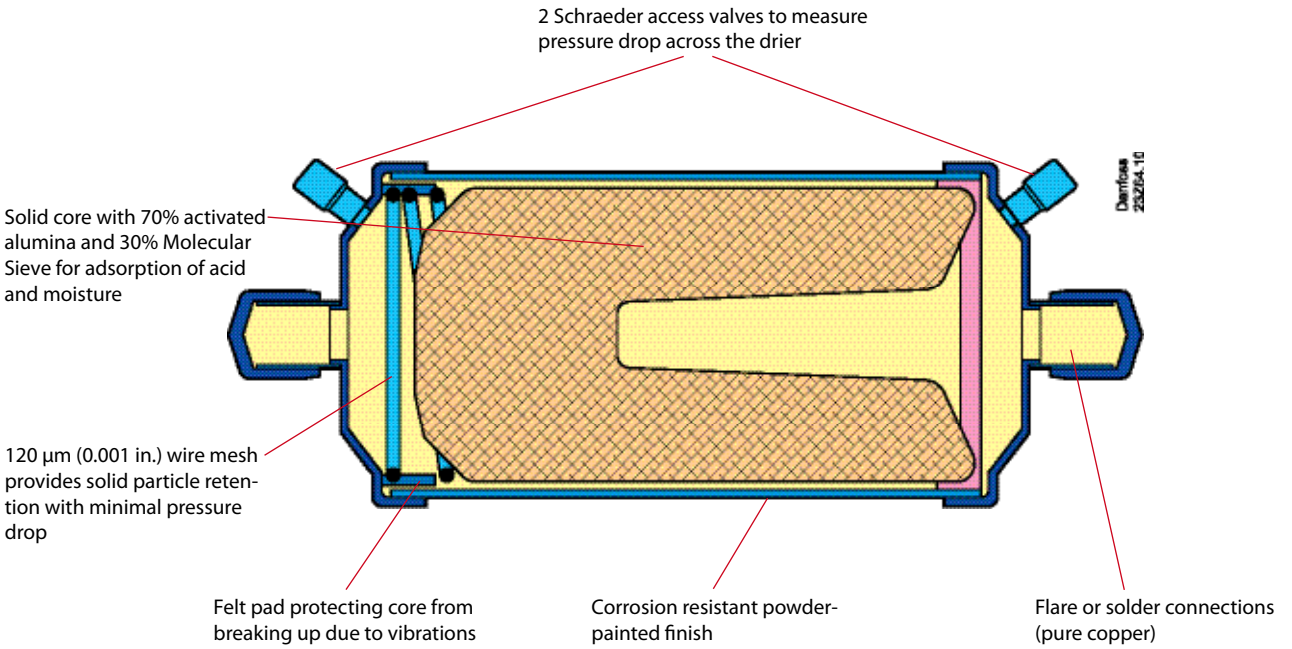

Applications	Advantages	Facts
· Traditional refrigeration · Air conditioning units · Transport refrigeration	· The large diameter of the burn-out filter drier means that flow velocity is suitably low and the pressure drop minimal. · Bonded solid core grains eliminate powder formation. · Corrosion resistant powder-painted finish (shell for 500 hrs in salt spray chamber)	· Installation with any orientation provided the flow is in the arrow direction · Available in sizes from 8 to 60 cubic inches · For use with HCFC and HFC refrigerants

Technical data and ordering

Ordering

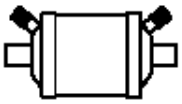

Flare

Type	Connection in.	Code no.
DAS 083	3/8	023Z1001
DAS 084	1/2	023Z1002
DAS 164	1/2	023Z1007
DAS 165	5/8	023Z1008

Solder (pure copper)

Type	Connection in.	Code no.
DAS 083	3/8	023Z1003
DAS 084	1/2	023Z1004
DAS 085	5/8	023Z1005
DAS 086	3/4	023Z1006
DAS 164	1/2	023Z1009
DAS 165	5/8	023Z1010
DAS 166	3/4	023Z1011
DAS 167	7/8	023Z1012
DAS 305	5/8	023Z1013
DAS 306	3/4	023Z1014
DAS 307	7/8	023Z1015
DAS 309	1 1/8	023Z1016
DAS 417	7/8	023Z1017
DAS 419	1 1/8	023Z1018
DAS 607	7/8	023Z1019
DAS 609	1 1/8	023Z1020

Capacities

	Rated capacity, Q_n [1]						Acid capacity[2]
	R22/R407C/R410A		R134a		R404A/R507		
	[TR]	[kW]	[TR]	[kW]	[TR]	[kW]	[g]
DAS 083	1.7	6.0	1.0	3.5	1.3	4.5	3.8
DAS 084	2.9	10.0	1.6	5.5	2.3	8.0	
DAS 085	4.1	14.5	2.6	9.0	3.6	12.5	
DAS 086	5.4	19.0	3.3	11.5	4.7	16.5	
DAS 164	3.0	10.5	1.7	6.0	2.4	8.5	8.6
DAS 165	4.3	15.0	2.7	9.5	3.7	13.0	
DAS 166	5.7	20.0	3.4	12.0	4.9	17.0	
DAS 167	6.3	22.0	3.9	13.5	5.4	19.0	
DAS 305	5.1	18.0	3.1	11.0	4.3	15.0	18.2
DAS 306	6.3	22.0	4.0	14.0	5.4	19.0	
DAS 307	7.4	26.0	4.6	16.0	6.3	22.0	
DAS 309	8.9	31.0	5.7	20.0	7.7	27.0	
DAS 417	8.6	30.0	5.1	18.0	7.1	25.0	24.3
DAS 419	10.0	35.0	6.3	22.0	8.6	30.0	
DAS 607	5.7	20.0	3.4	12.0	4.9	17.0	36.5

[1]) Rated capacity is stated at:
evaporating temperature t_e = 4 °C
pressure drop Δp = 0.21 bar

[2]) Adsorption capacity of oleic acid at 0.05 TAN (Total Acid Number).

Capacities for other temperatures than 4 °C are calculated by use of correction factors. Divide your actual evaporator capacity with the correction factor given for your actual evaporating temperature.
Look up the capacity table for the necessary rated capacity.

$Q_e / F_e = Q_n$

Q_e = Actual evaporator capacity
Q_n = Nominal capacity
F_e = Correction factor

Correction factors. F_e evaporating temperatures [°C]

[°C]	4	0	–5	–10	–15	–20	–25	–30	–35	–40
F_e	1	0.9	0.75	0.6	0.5	0.4	0.35	0.25	0.2	0.15

Example
To select a burn-out filter drier for a R22 plant with an evaporator capacity at 8.5 kW at –20 °C you may use a burn-out filter drier with a rated capacity of 8.5/0.4 = 21.25 kW or bigger.
For example DAS 306.

SG+ – High pressure sight glasses

SG+ are sight glasses for commercial refrigeration applications. They are made in stainless steel and are available in versions with flare and solder connections.
The SGM+ are mainly used to indicate the condition of the refrigerant as well as the liquid level in the receiver or the oil level in the compressor.
The SGN+ are equipped with sensitive indicators that reflects a colour, depending on the moisture content in the refrigerant.

Features

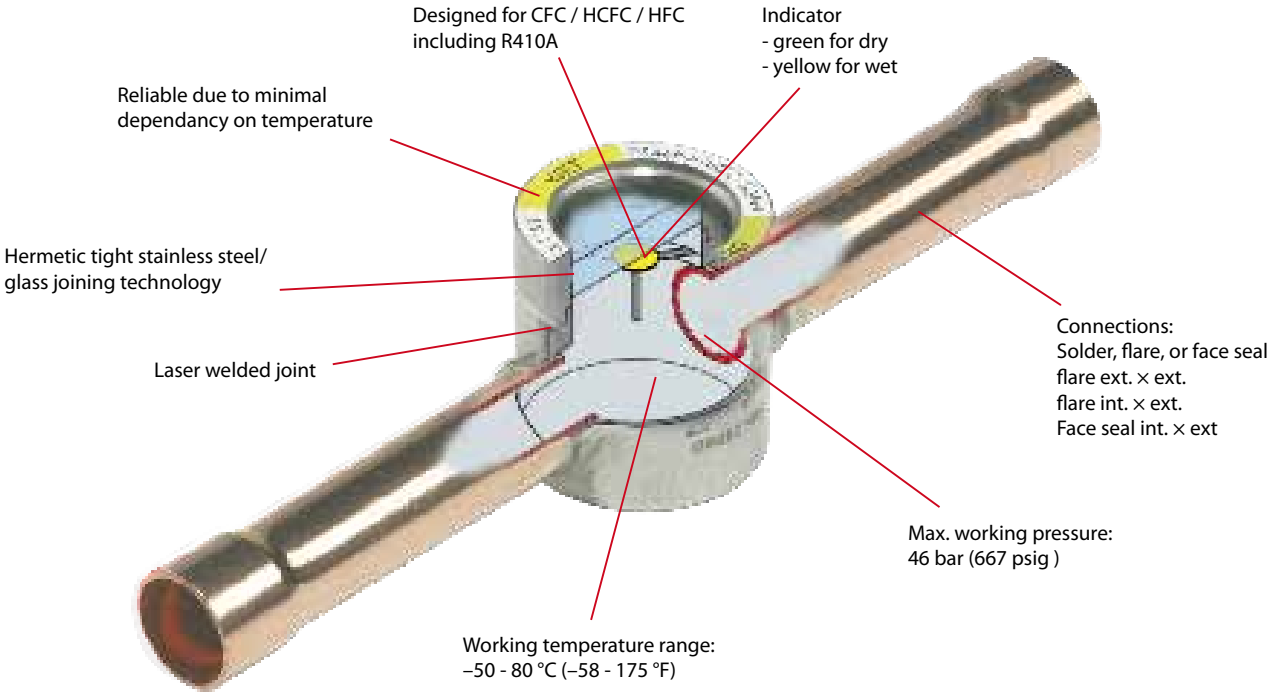

Applications	Advantages	Facts
· Traditional refrigeration · Heat pump systems · Air conditioning units · Liquid coolers · Transport refrigeration	· Visual indication of moisture: - Minimum dependence of temperature. - Quick and clear colour change. · The flare ext. × int. version can be screwed together with filter drier (reduction of assembly costs). · Flare connections are 4-sided for quick installation. · All solder versions are with extended ends. · Designed for high working pressures.	· Designed for CFC/HCFC/HFC refrigerants. · Connections: - Solder × solder - Flare ext. × ext. - Flare int. × ext. - Face seal int. × ext. · Wide range with sizes from 6 to 22 mm. · Max. working pressure: 46 bar (667 psig) · Working temperature: –50 - 80 °C (–58- 175 °F) · Approvals: UL, CE.

Available types

Solder version Flare version	**SGM+:** Without moisture indicator

Solder version Flare version	**SGN+:** With HFC moisture indicator

Ordering

	Type	Version	Connection in.	Connection mm	Code no.	Code no. (Industrial pack for OEM)
	SGM+ 10	Flare ext. × ext.	3/8 × 3/8	10 × 10	014F0080	
	SGM+ 12s SGM+ 16s	Solder ODF × ODF	1/2 × 1/2 5/8 × 5/8	16 × 16	014F0086 014F0087	

	Type	Version	Connection in.	Connection mm	Code no.	Code no. (Industrial pack for OEM)
	SGN+ 6 SGN+ 10 SGN+ 12 SGN+ 16 SGN+ 19	Flare ext. × ext.	1/4 × 1/4 3/8 × 3/8 1/2 × 1/2 5/8 × 5/8 3/4 × 3/4	6 × 6 10 × 10 12 × 12 16 × 16 19 × 19	014F0161 014F0162 014F0163 014F0165 014F0166	014F1131 014F0250
	SGN+ 6 SGN+ 10 SGN+ 12 SGN+ 16 SGN+ 19	Flare int. × ext. [1]	1/4 × 1/4 3/8 × 3/8 1/2 × 1/2 5/8 × 5/8 3/4 × 3/4	6 × 6 10 × 10 12 × 12 16 × 16 19 × 19	014F0171 014F0172 014F0173 014F0174 014F0175	014F1132 014F0124 014F1128 014F1129
	SGN+ 6s SGN+ 10s SGN+ 12s SGN+ 16s SGN+ 19s SGN+ 22s SGN+ 22s	Solder ODF × ODF	1/4 × 1/4 3/8 × 3/8 1/2 × 1/2 5/8 × 5/8 3/4 × 3/4 7/8 × 7/8 1 1/8 × 1 1/8	16 × 16 19 × 19 22 × 22	014F0181 014F0182 014F0183 014F0184 014F0185 014F0186 014F0187	014F0148 014F1224 014F0117 014F0199 014F0200
	SGN+ 6s SGN+ 10s SGN+ 12s SGN+ 18s	Solder ODF × ODF		6 × 6 10 × 10 12 × 12 18 × 18	014F0191 014F0192 014F0193 014F0195	014F1020 014F1130
	SGN+ 6s SGN+ 10s SGN+ 12s SGN+ 16s SGN+ 22s	Solder ODF × ODM	1/4 × 1/4 3/8 × 3/8 1/2 × 1/2 5/8 × 5/8 7/8 × 7/8	16 × 16 22 × 22	014F0201 014F0202 014F0203 014F0204 014F0206	014F1201 014F1202 014F1203 014F1204 014F1206

[1] Can be screwed directly into the filter drier.

Accessories

Cap Cover		
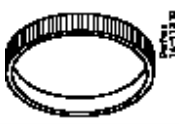	**Sight glasses**	**Code no.**
	size 6 - 10	014F5481
	size 12 - 22	014F5480

SG – Standard sight glasses

SG are sight glasses for commercial refrigeration applications. They are made in brass and are available in versions with flare, solder, face seal or socket connections.
The SG and SGR are mainly used to indicate the condition of the refrigerant as well as the liquid level in the receiver or the oil level in the compressor.
The SGI/SGN and SGRI/SGRN are equipped with sensitive indicators that change colour depending on the moisture content in the refrigerant.

Features

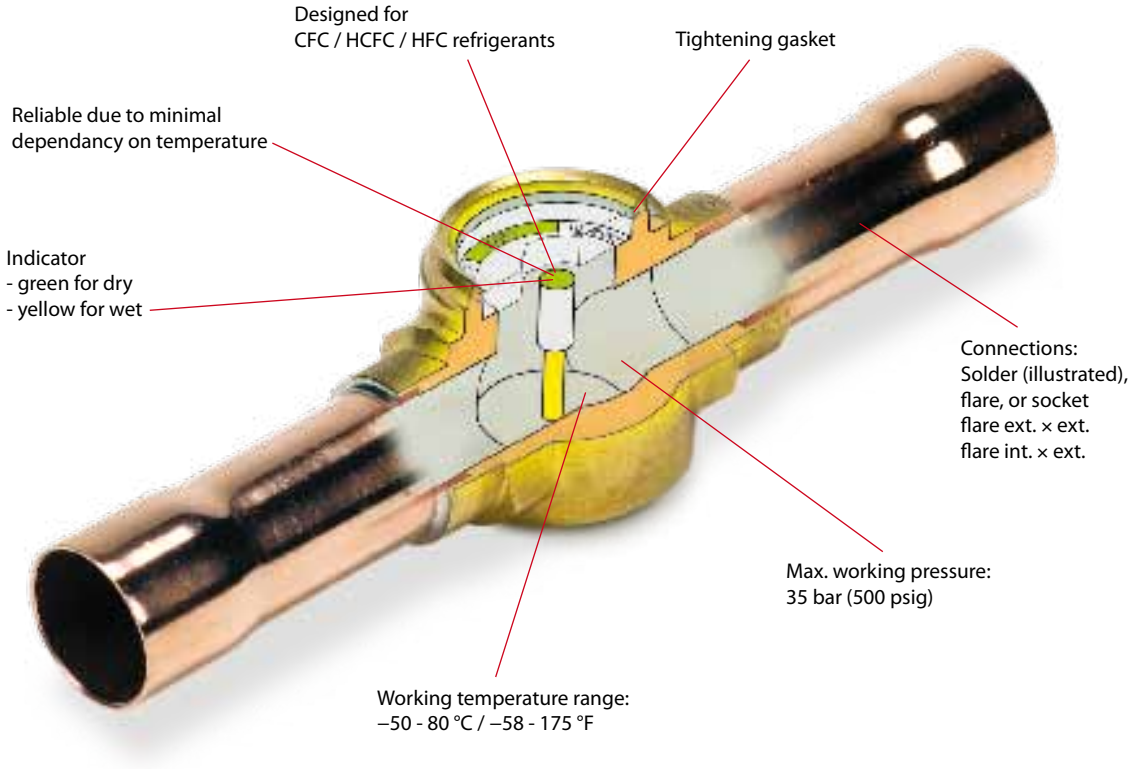

Applications	Advantages	Facts
· Traditional refrigeration · Heat pump systems · Air conditioning units · Liquid coolers · Transport refrigeration	· Visual indication of moisture (minimal dependence on temperature). · The flare ext. × int. version can be screwed together with filter drier (reduction of assembly costs). · Flare connections are 4-sided for quick installation. · Solder versions available with extended ends. · Designed for high working pressures.	· Designed for CFC/HCFC/HFC refrigerants. · Connections: · Connections: - Solder × solder - Flare ext. × ext. - Flare int. × ext. - Socket · Wide range with connection sizes from 6 - 22 mm. · Max. working pressure: 35 bar (500 psig). · Working temperature: –50 - 80 °C (–58 - 175 °F).

Available types

Solder version	**SG:** Sight glass, no indicator
Solder version	**SGI:** for refrigerants with mineral oils (CFC/HCFC), with indicator
Flare version	**SGN:** for refrigerants with POE oils (HFC), with indicator

Socket	**SGR:** Socket sight glass, no indicator
Socket Saddle	**SGRI:** Saddle sight glass for refrigerants with mineral oils (CFC/HCFC), with indicator **SGRN:** Saddle sight glass for refrigerants with POE oils (HFC), with indicator

Ordering

	Type	Version	Connection in.	Connection mm	Code no.
	SG 10	Flare ext. × ext.	$^3/_8 \times ^3/_8$	10 × 10	014-0080
	SG 12s SG 16s	Solder ODF × ODF	$^1/_2 \times ^1/_2$ $^5/_8 \times ^5/_8$	 16 × 16	014-0086 014-0087
	SGI 6 SGI 10 SGI 12 SGI 16 SGI 19	Flare ext. × ext.	$^1/_4 \times ^1/_4$ $^3/_8 \times ^3/_8$ $^1/_2 \times ^1/_2$ $^5/_8 \times ^5/_8$ $^3/_4 \times ^3/_4$	6 × 6 10 × 10 12 × 12 16 × 16 19 × 19	014-0007 014-0008 014-0009 014-0024 014-0028
	SGI 6 SGI 10 SGI 12 SGI 16 SGI 19	Flare int. × ext. [1]	$^1/_4 \times ^1/_4$ $^3/_8 \times ^3/_8$ $^1/_2 \times ^1/_2$ $^5/_8 \times ^5/_8$ $^3/_4 \times ^3/_4$	6 × 6 10 × 10 12 × 12 16 × 16 19 × 19	014-0021 014-0022 014-0025 014-0026 014-0043
	SGI 6s SGI 10s SGI 12s SGI 16s SGI 19s SGI 22s	Solder ODF × ODF	$^1/_4 \times ^1/_4$ $^3/_8 \times ^3/_8$ $^1/_2 \times ^1/_2$ $^5/_8 \times ^5/_8$ $^3/_4 \times ^3/_4$ $^7/_8 \times ^7/_8$	 16 × 16 19 × 19 22 × 22	014-0034 014-0035 014-0036 014-0044 014-0047 014-0039
	SGI 6s SGI 10s SGI 12s SGI 18s	Solder ODF × ODF		6 × 6 10 × 10 12 × 12 18 × 18	014-0040 014-0041 014-0042 014-0045
	SGI 6s SGI 10s SGI 12s SGI 16s SGI 22s	Solder ODF × ODM	$^1/_4 \times ^1/_4$ $^3/_8 \times ^3/_8$ $^1/_2 \times ^1/_2$ $^5/_8 \times ^5/_8$ $^7/_8 \times ^7/_8$	 16 × 16 22 × 22	014-0125 014-0126 014-0127 014-0128 014-0130
	SGN 6 SGN 10 SGN 12 SGN 16 SGN 19	Flare ext. × ext.	$^1/_4 \times ^1/_4$ $^3/_8 \times ^3/_8$ $^1/_2 \times ^1/_2$ $^5/_8 \times ^5/_8$ $^3/_4 \times ^3/_4$	6 × 6 10 × 10 12 × 12 16 × 16 19 × 19	014-0161 014-0162 014-0163 014-0165 014-0166
	SGN 6 SGN 10 SGN 12 SGN 16 SGN 19	Flare int. × ext. [1]	$^1/_4 \times ^1/_4$ $^3/_8 \times ^3/_8$ $^1/_2 \times ^1/_2$ $^5/_8 \times ^5/_8$ $^3/_4 \times ^3/_4$	6 × 6 10 × 10 12 × 12 16 × 16 19 × 19	014-0171 014-0172 014-0173 014-0174 014-0175
	SGN 6s SGN 10s SGN 12s SGN 16s SGN 19s SGN 22s SGN 22s	Solder ODF × ODF	$^1/_4 \times ^1/_4$ $^3/_8 \times ^3/_8$ $^1/_2 \times ^1/_2$ $^5/_8 \times ^5/_8$ $^3/_4 \times ^3/_4$ $^7/_8 \times ^7/_8$ $1^1/_8 \times 1^1/_8$	 16 × 16 19 × 19 22 × 22	014-0181 014-0182 014-0183 014-0184 014-0185 014-0186 014-0187
	SGN 6s SGN 10s SGN 12s SGN 18s	Solder ODF × ODF		6 × 6 10 × 10 12 × 12 18 × 18	014-0191 014-0192 014-0193 014-0195
	SGN 6s SGN 10s SGN 12s SGN 16s SGN 22s	Solder ODF × ODM	$^1/_4 \times ^1/_4$ $^3/_8 \times ^3/_8$ $^1/_2 \times ^1/_2$ $^5/_8 \times ^5/_8$ $^7/_8 \times ^7/_8$	 16 × 16 22 × 22	014-0201 014-0202 014-0203 014-0204 014-0206

[1]) Can be screwed directly into the filter drier.

Ordering

Socket type

	Type	Version	Connection 1	Connection 2	Code no.
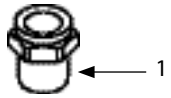	SGR	SGR for saddle	G¾ A [1]		014-0004
		NPT	¾ -14 NPT [2]		014-0005
		NPT	½ -14 NPT [2]		014-0002
	SGRI	SGRI for saddle	½ - 14 NPT [2] M24 × 1		014-0131 014-1154
	SGRN	SGRN for saddle	½ -14 NPT [2] M24 × 1		014-0006 014-1155
	Sight glass saddle	Tube fitting	M24 × 1	$^{7}/_{8}$	014-1059
				$1^{1}/_{8}$	014-1056
				$1^{3}/_{8}$	014-1057
				$1^{5}/_{8}$	014-1058
				$2^{1}/_{8}$	014-1067
				$3^{1}/_{8}$	014-1068
				$4^{1}/_{8}$	014-1069
	SGRN	SGRN for saddle	M20 × 1.5		014-1603
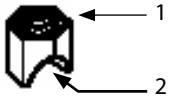	Sight glass saddle	Tube fitting	M20 × 1.5	$3^{1}/_{8}$	014-1072

[1] ISO 228/1
[2] ANSI/ASME B1.20.1

OUB – Oil separators

The oil separator type OUB is for use in all refrigeration plant where the compressor lubricating oil must be returned directly to the compressor oil sump under all operating conditions.
In this way lubricating oil from the compressor is prevented from circulating with the refrigerant in the refrigeration system itself.

Features

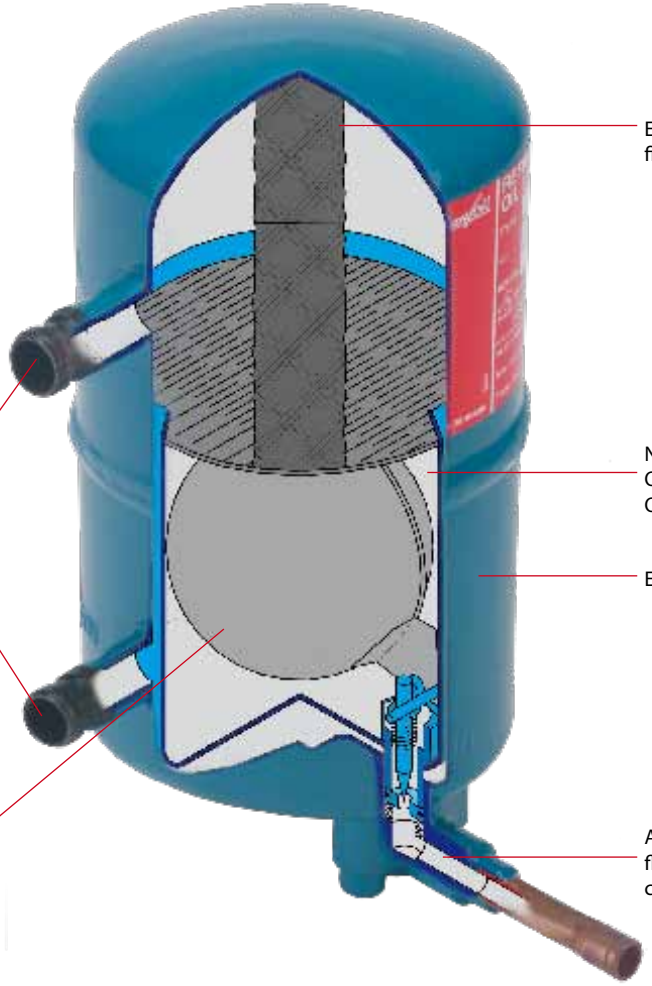

Applications	Advantages	Facts
· Traditional refrigeration · Air conditioning units	· High efficiency Due to the interaction of reduced flow and a change of flow direction for oil concentration. The collection of the separated oil at high temperature and the automatic return of the oil to the crankcase. · High efficiency Protects against liquid hammer in compressor · Better utilisation of condenser and evaporator capacity (no oil-gas collection). · Prevents compressor breakdown caused by lack of lubrication. · Increases compressor operating life.	· Ensures oil return to compressor oil sump. · Pulsation and noise damping on high-pressure side of system · Max. working pressure PS = 28 bar · Refrigerants HCFC, HFC · Temperature of medium –40 to 120 °C · Net volume OUB 1: 0.52 l OUB 4: 2.46 l

Technical data and ordering

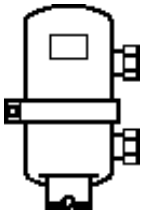

OUB 1 / OUB 4

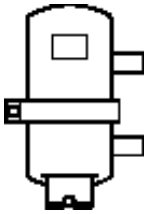

OUB 1s

Type	Connection			Rated plant capacity kW					Code no. for OUB + unions (straightway)
	in.	mm	Version	R22	R134a	R404A	R507	R407C	
OUB 1	3/8	10	Flare	3.1	2.5	3.5	3.5	4.4	040B0010 + 2 × 040B0132
	3/8	-	Solder						040B0010 + 2 × 040B0140
	-	10	Solder						040B0010 + 2 × 040B0138
	1/2	12	Flare						040B0010 + 2 × 040B0134
	1/2	-	Solder						040B0010 + 2 × 040B0142
	-	12	Solder						040B0010 + 2 × 040B0139
	5/8	16	Flare						040B0010 + 2 × 040B0136
	5/8	16	Solder						040B0010 + 2 × 040B0144
	Without connection unions								040B0010
OUB 1s [1]	-	10	Solder	3.1	2.5	3.5	3.5	4.4	040B0023
OUB 1s [2]	-	10	Solder						040B0029
OUB 4	5/8	16	Flare	11.6	9.6	12.8	12.8	16.0	040B0040 + 2 × 040B0256
	5/8	16	Solder						040B0040 + 2 × 040B0266
	3/4	18	Flare						040B0040 + 2 × 040B0258
	3/4	-	Solder						040B0040 + 2 × 040B0268
	7/8	-	Solder						040B0040 + 2 × 040B0270
	-	22	Solder						040B0040 + 2 × 040B0264
	1	25	Flare						040B0040 + 2 × 040B0260
	1	-	Solder						040B0040 + 2 × 040B0272
	1 1/8	-	Solder						040B0040 + 2 × 040B0274
	-	28	Solder						040B0040 + 2 × 040B0265
	Without connection unions								040B0040

1) 1/4 in. flare connection to oil return line.
2) 6 mm ODF solder connection to oil return line.

HE – Heat exchanger

Heat exchanger type HE is used primarily for heat transfer between the liquid and suction lines of the refrigeration plant.
The purpose is to utilize the cooling effect which without a heat exchanger is otherwise lost to the ambient air via uninsulated suction lines.
In the heat exchanger, this effect is used to subcool the refrigerant liquid.

Features

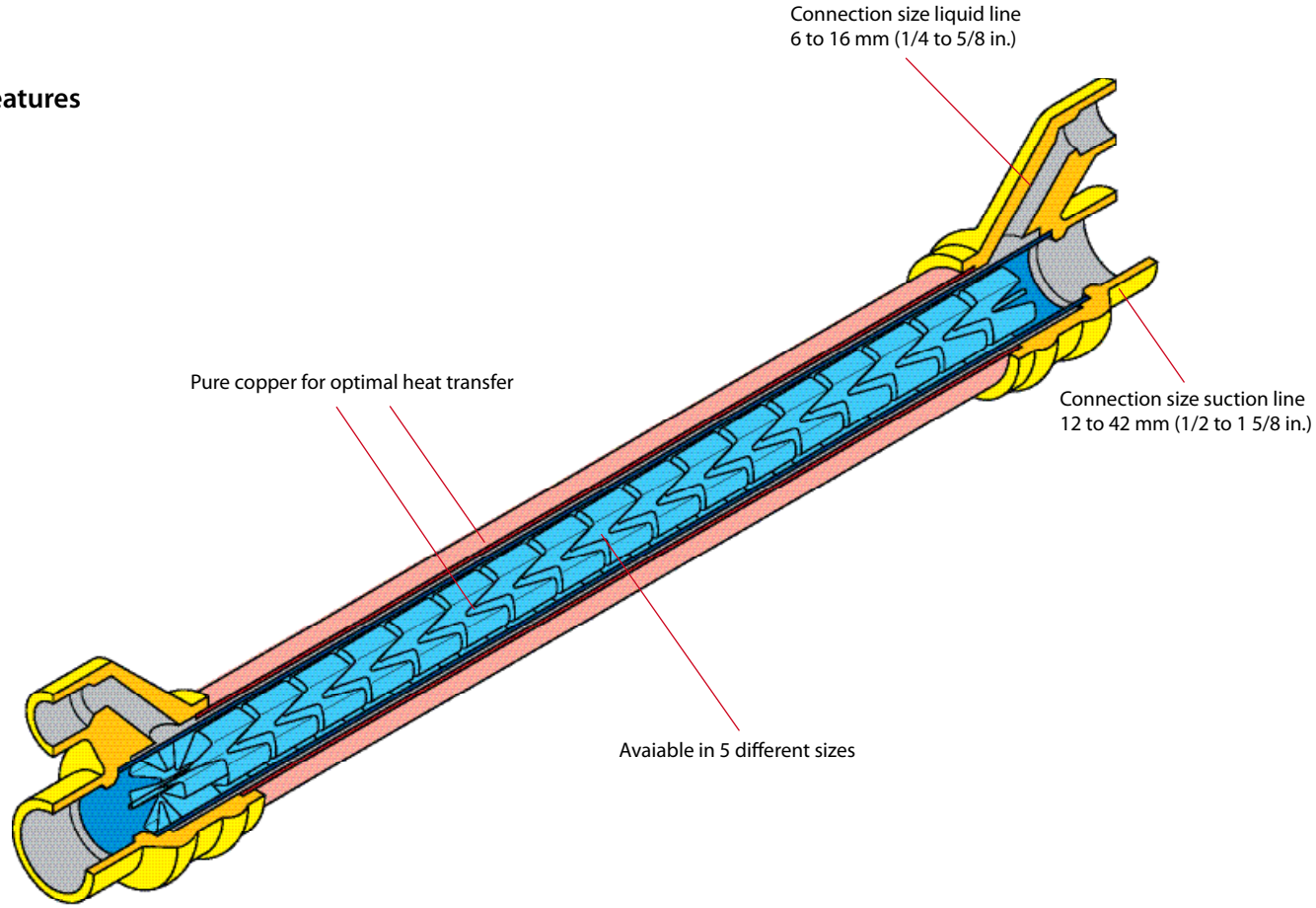

Applications	Advantages	Facts
· Traditional refrigeration · Air conditioning units	· The design is such that normal suction gas velocities are achieved, with a subsequent small pressure drop. Thus the heat exchanger capacity will match plant capacity. · At the same time, oil return to the compressor is ensured. · Helps ensure vapour-free liquid ahead of expansion valve. · Helps prevent sweating and iced-up suction lines. · Maximum utilisation of evaporator on setting the thermostatic expansion valve for minimum superheat.	· For use with HCFC and HFC refrigerants · Max. working pressure HE 0.5, 1.0, 1.5, 4.0: PS = 28 bar HE 8.0: PS = 21.5 bar · Operating temperature –60 to 120 °C

Technical data and ordering

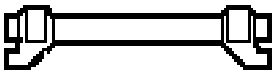

Type	Solder connection ODF				Code no.
	Liquid line		Suction line		
	in.	mm	in.	mm	
HE 0.5	-	6	-	12	015D0001
	1/4	-	1/2	-	015D0002
HE 1.0	-	10	-	16	015D0003
	3/8	-	5/8	-	015D0004
HE 1.5	-	12	-	18	015D0005
	1/2	-	3/4	-	015D0006
HE 4.0	-	12	-	28	015D0007
	1/2	-	1 1/8	-	015D0008
HE 8.0	-	16	-	42	015D0009
	5/8	-	1 5/8	-	015D0010

Selection

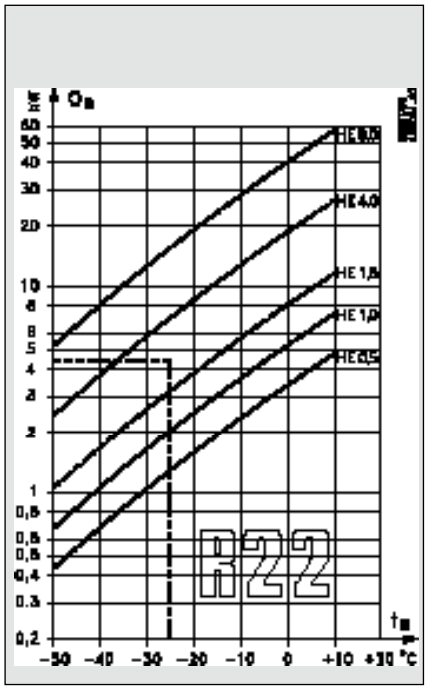

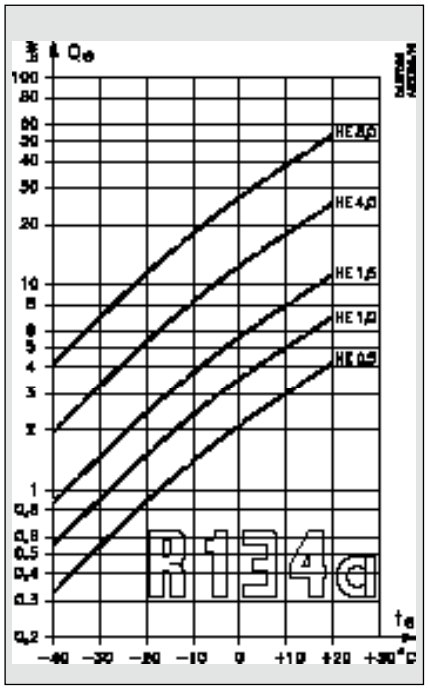

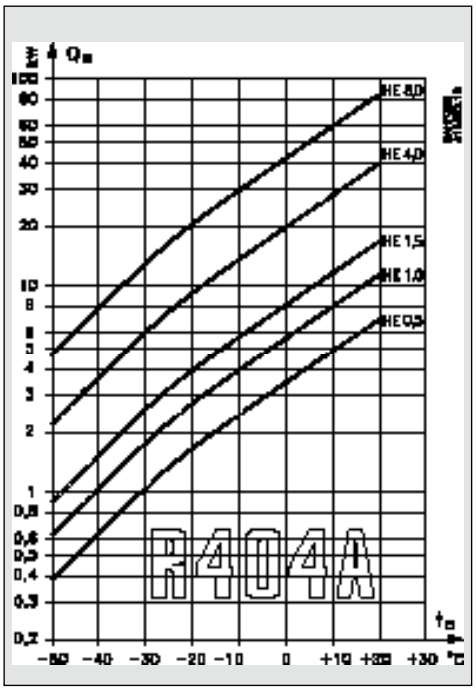

The curve for R22 shows that an HE 4.0 is suitable. The curve for HE 4.0 lies immediately above the intersection of the lines through
Q_e = 4.5 kW and t_e = –25 °C.

The heat flow Q during heat exchange is calculated from the formula:
$Q = k \times A \times \Delta t_m$

Q heat flow in W
k heat transfer coefficient in W/m² °C
A transfer area of the heat exchanger in m²
Δt_m the average temperature difference in °C, calculated from the formula:

$$\Delta t_m = \frac{\Delta t_{max.} - t_{min.}}{\ln \frac{\Delta t_{max.}}{\Delta t_{min.}}}$$

k × A values
Determined by experiment (see table).

Type	K × A
	[1]) Dry suction gas / refrigerant liquid (normal use in refrigeration plant with fluorinated refrigerants) W / °C
HE 0.5	2.3
HE 1.0	3.1
HE 1.5	4.9
HE 4.0	11.0
HE 8.0	23.0

[1]) These figures apply to dry gas only. Even if a thermostatic expansion valve is used, the suction gas will carry very small liquid drops into the suction line.
The fins of the HE catch these drops which then evaporate. This may result in a smaller superheat than the theoretically calculated value.

Precise heat exchanger sizing can be obtained from the curves which show plant capacity Q_e for R22, R134a and R404A depending on evaporating temperature t_e.

Example

Plant capacity Q_e	= 4.5 kW
Refrigerant	= R22
Evaporating temperature t_e	= –25 °C

SVA-S and SVA-L – Flexline™ Stop valves

SVA Stop valves are available in angleway and straightway versions and with Standard neck (SVA-S) and Long neck (SVA-L).
The stop valves are designed to meet all industrial refrigeration application requirements and are designed to give favourable flow characteristics and are easy to dismantleand repair when necessary.

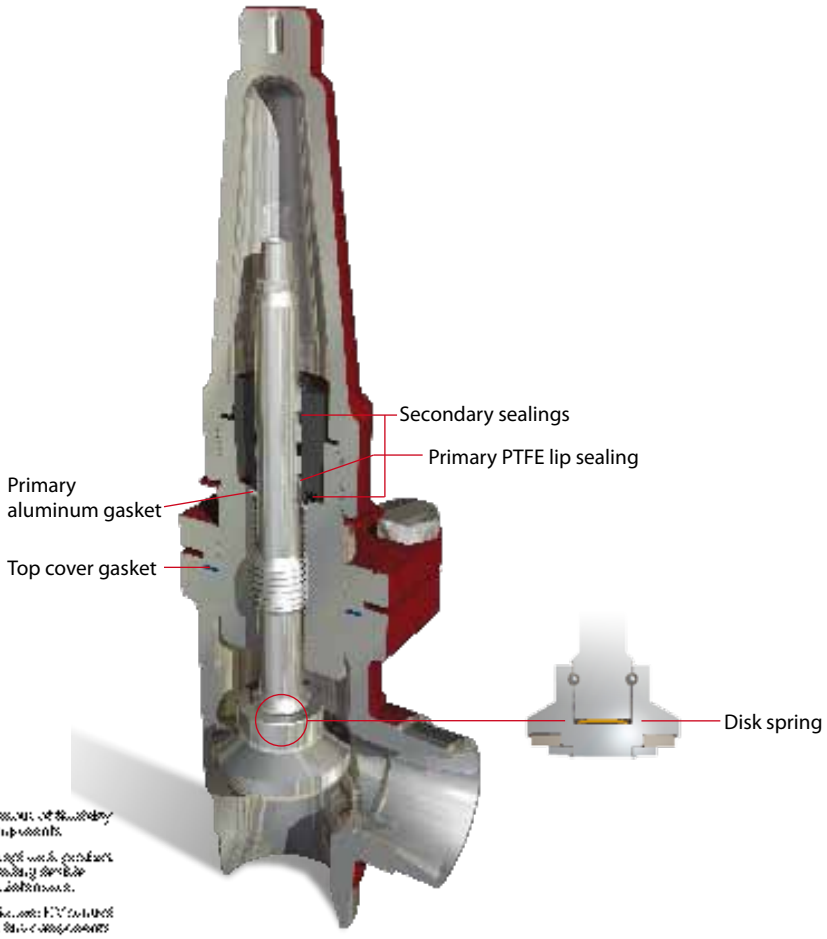

Advantages and features

- Applicable to all common refrigerants including flammable hydrocarbons and all non-corrosive gases/liquids.
  Can be used in chemical and petro-chemical applications.
- Optional accessories:
  - Heavy duty industrial hand wheel for frequent operation.
  - Cap for infrequent operation.
- Available in angleway and straightway versions with Standard neck or Long neck (DN 15 to DN 40) for insulated systems.
- Each valve type is clearly marked with type, size and performance range.
- The valves and caps are prepared for sealing, to prevent operation by unauthorized persons, using a seal wire.
- Internal metal backseating:
  - DN 6 - 65 (¼ - 2½ in.)
  Internal PTFE backseating:
  - DN 80 - 200 (3 - 8 in.)
- Can accept flow in both directions.
- Housing and bonnet material is low temperature steel according to requirements of the Pressure Equipment Directive and other international classification authorities.
- Equipped with stainless steel bolts.
- Max. working pressure: 52 bar g (754 psi g)
  Temperature range: –60/+150°C (–76/+302°F)
- Classification: DNV, CRN, BV etc.

Technical data and code numbers

Technical data

- *Refrigerants*
  Applicable to all common refrigerants including flammable hydrocarbons and all non-corrosive gases/liquids.
  For further information please see installation instruction for SVA.
- *Temperature range* –60/+150°C (–76/+302°F).
- *Pressure range* The valves are designed for max. working pressure 52 bar g (754 psi g).

Ordering

Available connection sizes
SVA-**S**:
The **S** means **S**tandard bonnet length (sizes from DN50 to DN200 are insulation friendly)

SVA-**L**:
The **L** means **L**ong bonnet length (insulation friendly)

Size	SVA-S	SVA-L
6	x	-
10	x	-
15	x	x
20	x	x
25	x	x
32	x	x
40	x	x
50	x	
65	x	
80	x	
100	x	
125	x	
150	x	

Please note that the type codes only serve to identify the valves, some of which may not form part of the standard product range.

Type codes

Valve type	SVA	Stop valve				
Nominal size in mm			Available connections			
			A/D	SOC	FPT	T
(valve size measured on the connection diameter)	**6**	DN 6 (1/4)	x			x
	10	DN 10 (3/8)	x			x
	15	DN 15 (½)	x	x	x	
	20	DN 20 (¾)	x	x	x	
	25	DN 25 (1)	x	x	x	
	32	DN 32 (1¼)	x	x	x	
	40	DN 40 (1½)	x	x		
	50	DN 50 (2)	x	x		
	65	DN 65 (2½)	x			
	80	DN 80 (3)	x			
	100	DN 100 (4)	x			
	125	DN 125 (5)	x			
	150	DN 150 (6)	x			
	200	DN 200 (8)	x			
Connections	**A**	Butt-weld connection: ANSI B 36.10 schedule 80, DN 15 - 40 (½ - 1½ in.)				
		Butt-weld connection: ANSI B 36.10 schedule 40, DN 50 - 200 (2 - 8 in.)				
	D	Butt-weld connection: DIN EN 10220				
	SOC	Socket weld: ANSI B 16.11				
	FPT	Female Pipe Thread NPT: ANSI/ASME B 1.20.1				
	T	Outside threaded connections ISO 228/1 Pipe thread				
Valve housing	**ANG**	Angle flow				
	STR	Straight flow				
Other equipment	**H-WHEEL**	Hand wheel				
	CAP	Cap				

Important!
Where products need to be certified according to specific certification societies or where higher pressures are required, the relevant information should be included at the time of order.

Ordering SVA-S

Example:
SVA-S 20 DIN angleway with hand wheel = **148B5300**

Important!
Where products need to be certified according to specific certification societies or where higher pressures are required, the relevant information should be included at the time of order.

ANG = Angleway
STR = Straightway

CAP = Cap
H-WHEEL = Hand wheel

SVA-S Angleway

Size mm	Size in.	Type	MWP bar	MWP psi	Code number
Butt-weld DIN (EN 10220)					
6	¼	SVA-S 6 D ANG H-WHEEL	52	754	148B5000
6	¼	SVA-S 6 D ANG CAP	52	754	148B5001
10	⅜	SVA-S 10 D ANG H-WHEEL	52	754	148B5100
10	⅜	SVA-S 10 D ANG CAP	52	754	148B5101
15	½	SVA-S 15 D ANG H-WHEEL	52	754	148B5200
15	½	SVA-S 15 D ANG CAP	52	754	148B5201
20	¾	SVA-S 20 D ANG H-WHEEL	52	754	148B5300
20	¾	SVA-S 20 D ANG CAP	52	754	148B5301
25	1	SVA-S 25 D ANG H-WHEEL	52	754	148B5400
25	1	SVA-S 25 D ANG CAP	52	754	148B5401
32	1¼	SVA-S 32 D ANG H-WHEEL	52	754	148B5500
32	1¼	SVA-S 32 D ANG CAP	52	754	148B5501
40	1½	SVA-S 40 D ANG H-WHEEL	52	754	148B5600
40	1½	SVA-S 40 D ANG CAP	52	754	148B5601
50	2	SVA-S 50 D ANG H-WHEEL	52	754	148B5700
50	2	SVA-S 50 D ANG CAP	52	754	148B5701
65	2½	SVA-S 65 D ANG H-WHEEL	52	754	148B5800
65	2½	SVA-S 65 D ANG CAP	52	754	148B5801
80	3	SVA-S 80 D ANG H-WHEEL	52	754	148B5900
80	3	SVA-S 80 D ANG CAP	52	754	148B5901
100	4	SVA-S 100 D ANG H-WHEEL	52	754	148B6000
100	4	SVA-S 100 D ANG CAP	52	754	148B6001
125	5	SVA-S 125 D ANG H-WHEEL	52	754	148B6100
125	5	SVA-S 125 D ANG CAP	52	754	148B6101
150	6	SVA-S 150 D ANG H-WHEEL	52	754	148B6200
150	6	SVA-S 150 D ANG CAP	52	754	148B6201
200	8	SVA-S 200 D ANG H-WHEEL	52	754	148B6300
200	8	SVA-S 200 D ANG CAP	52	754	148B6301
Butt-weld ANSI (B 36.10 Schedule 80)					
6	¼	SVA-S 6 A ANG H-WHEEL	52	754	148B5020
6	¼	SVA-S 6 A ANG CAP	52	754	148B5021
10	⅜	SVA-S 10 A ANG H-WHEEL	52	754	148B5120
10	⅜	SVA-S 10 A ANG CAP	52	754	148B5121
15	½	SVA-S 15 A ANG H-WHEEL	52	754	148B5220
15	½	SVA-S 15 A ANG CAP	52	754	148B5221
20	¾	SVA-S 20 A ANG H-WHEEL	52	754	148B5320
20	¾	SVA-S 20 A ANG CAP	52	754	148B5321
25	1	SVA-S 25 A ANG H-WHEEL	52	754	148B5420
25	1	SVA-S 25 A ANG CAP	52	754	148B5421
32	1¼	SVA-S 32 A ANG H-WHEEL	52	754	148B5520
32	1¼	SVA-S 32 A ANG CAP	52	754	148B5521
40	1½	SVA-S 40 A ANG H-WHEEL	52	754	148B5620
40	1½	SVA-S 40 A ANG CAP	52	754	148B5621
Butt-weld ANSI (B 36.10 Schedule 40)					
50	2	SVA-S 50 A ANG H-WHEEL	52	754	148B5720
50	2	SVA-S 50 A ANG CAP	52	754	148B5721
65	2½	SVA-S 65 A ANG H-WHEEL	52	754	148B5820
65	2½	SVA-S 65 A ANG CAP	52	754	148B5821
80	3	SVA-S 80 A ANG H-WHEEL	52	754	148B5920
80	3	SVA-S 80 A ANG CAP	52	754	148B5921
100	4	SVA-S 100 A ANG H-WHEEL	52	754	148B6020
100	4	SVA-S 100 A ANG CAP	52	754	148B6021
125	5	SVA-S 125 A ANG H-WHEEL	52	754	148B6120
125	5	SVA-S 125 A ANG CAP	52	754	148B6121
150	6	SVA-S 150 A ANG H-WHEEL	52	754	148B6220
150	6	SVA-S 150 A ANG CAP	52	754	148B6221
200	8	SVA-S 200 A ANG H-WHEEL	52	754	148B6320
200	8	SVA-S 200 A ANG CAP	52	754	148B6321
Socket welding ANSI (B 16.11)					
15	½	SVA-S 15 SOC ANG H-WHEEL	52	754	148B5222
15	½	SVA-S 15 SOC ANG CAP	52	754	148B5223
20	¾	SVA-S 20 SOC ANG H-WHEEL	52	754	148B5322
20	¾	SVA-S 20 SOC ANG CAP	52	754	148B5323
25	1	SVA-S 25 SOC ANG H-WHEEL	52	754	148B5422
25	1	SVA-S 25 SOC ANG CAP	52	754	148B5423
32	1¼	SVA-S 32 SOC ANG H-WHEEL	52	754	148B5522
32	1¼	SVA-S 32 SOC ANG CAP	52	754	148B5523
40	1½	SVA-S 40 SOC ANG H-WHEEL	52	754	148B5622
40	1½	SVA-S 40 SOC ANG CAP	52	754	148B5623
50	2	SVA-S 50 SOC ANG H-WHEEL	52	754	148B5722
50	2	SVA-S 50 SOC ANG CAP	52	754	148B5723
FPT inside pipe thread, NPT (ANSI/ASME B 1.20.1)					
15	½	SVA-S 15 FTP ANG H-WHEEL	52	754	148B5224
15	½	SVA-S 15 FTP ANG CAP	52	754	148B5225
20	¾	SVA-S 20 FTP ANG H-WHEEL	52	754	148B5324
20	¾	SVA-S 20 FTP ANG CAP	52	754	148B5325
25	1	SVA-S 25 FTP ANG H-WHEEL	52	754	148B5424
25	1	SVA-S 25 FTP ANG CAP	52	754	148B5425
32	1¼	SVA-S 32 FTP ANG H-WHEEL	52	754	148B5524
32	1¼	SVA-S 32 FTP ANG CAP	52	754	148B5525
T outside pipe thread, (ISO 228/1)					
6	¼	SVA-S 6 T ANG CAP	52	754	148B5032

SVA-S Straightway

Size mm	Size in.	Type	MWP bar	MWP psi	Code number
Butt-weld DIN (EN 10220)					
6	¼	SVA-S 6 D STR H-WHEEL	52	754	148B5010
6	¼	SVA-S 6 D STR CAP	52	754	148B5011
10	⅜	SVA-S 10 D STR H-WHEEL	52	754	148B5110
10	⅜	SVA-S 10 D STR CAP	52	754	148B5111
15	½	SVA-S 15 D STR H-WHEEL	52	754	148B5210
15	½	SVA-S 15 D STR CAP	52	754	148B5211
20	¾	SVA-S 20 D STR H-WHEEL	52	754	148B5310
20	¾	SVA-S 20 D STR CAP	52	754	148B5311
25	1	SVA-S 25 D STR H-WHEEL	52	754	148B5410
25	1	SVA-S 25 D STR CAP	52	754	148B5411
32	1¼	SVA-S 32 D STR H-WHEEL	52	754	148B5510
32	1¼	SVA-S 32 D STR CAP	52	754	148B5511
40	1½	SVA-S 40 D STR H-WHEEL	52	754	148B5610
40	1½	SVA-S 40 D STR CAP	52	754	148B5611
50	2	SVA-S 50 D STR H-WHEEL	52	754	148B5710
50	2	SVA-S 50 D STR CAP	52	754	148B5711
65	2½	SVA-S 65 D STR H-WHEEL	52	754	148B5810
65	2½	SVA-S 65 D STR CAP	52	754	148B5811
80	3	SVA-S 80 D STR H-WHEEL	52	754	148B5910
80	3	SVA-S 80 D STR CAP	52	754	148B5911
100	4	SVA-S 100 D STR H-WHEEL	52	754	148B6010
100	4	SVA-S 100 D STR CAP	52	754	148B6011
125	5	SVA-S 125 D STR H-WHEEL	52	754	148B6110
125	5	SVA-S 125 D STR CAP	52	754	148B6111
150	6	SVA-S 150 D STR H-WHEEL	52	754	148B6210
150	6	SVA-S 150 D STR CAP	52	754	148B6211
200	8	SVA-S 200 D STR H-WHEEL	52	754	148B6310
200	8	SVA-S 200 D STR CAP	52	754	148B6311
Butt-weld ANSI (B 36.10 Schedule 80)					
6	¼	SVA-S 6 A STR H-WHEEL	52	754	148B5030
6	¼	SVA-S 6 A STR CAP	52	754	148B5031
10	⅜	SVA-S 10 A STR H-WHEEL	52	754	148B5130
10	⅜	SVA-S 10 A STR CAP	52	754	148B5131
15	½	SVA-S 15 A STR H-WHEEL	52	754	148B5230
15	½	SVA-S 15 A STR CAP	52	754	148B5231
20	¾	SVA-S 20 A STR H-WHEEL	52	754	148B5330
20	¾	SVA-S 20 A STR CAP	52	754	148B5331
25	1	SVA-S 25 A STR H-WHEEL	52	754	148B5430
25	1	SVA-S 25 A STR CAP	52	754	148B5431
32	1¼	SVA-S 32 A STR H-WHEEL	52	754	148B5530
32	1¼	SVA-S 32 A STR CAP	52	754	148B5531
40	1½	SVA-S 40 A STR H-WHEEL	52	754	148B5630
40	1½	SVA-S 40 A STR CAP	52	754	148B5631
Butt-weld ANSI (B 36.10 Schedule 40)					
50	2	SVA-S 50 A STR H-WHEEL	52	754	148B5730
50	2	SVA-S 50 A STR CAP	52	754	148B5731
65	2½	SVA-S 65 A STR H-WHEEL	52	754	148B5830
65	2½	SVA-S 65 A STR CAP	52	754	148B5831
80	3	SVA-S 80 A STR H-WHEEL	52	754	148B5930
80	3	SVA-S 80 A STR CAP	52	754	148B5931
100	4	SVA-S 100 A STR H-WHEEL	52	754	148B6030
100	4	SVA-S 100 A STR CAP	52	754	148B6031
125	5	SVA-S 125 A STR H-WHEEL	52	754	148B6130
125	5	SVA-S 125 A STR CAP	52	754	148B6131
150	6	SVA-S 150 A STR H-WHEEL	52	754	148B6230
150	6	SVA-S 150 A STR CAP	52	754	148B6231
200	8	SVA-S 200 A STR H-WHEEL	52	754	148B6330
200	8	SVA-S 200 A STR CAP	52	754	148B6331
Socket welding ANSI (B 16.11)					
15	½	SVA-S 15 SOC STR H-WHEEL	52	754	148B5232
15	½	SVA-S 15 SOC STR CAP	52	754	148B5233
20	¾	SVA-S 20 SOC STR H-WHEEL	52	754	148B5332
20	¾	SVA-S 20 SOC STR CAP	52	754	148B5333
25	1	SVA-S 25 SOC STR H-WHEEL	52	754	148B5432
25	1	SVA-S 25 SOC STR CAP	52	754	148B5433
32	1¼	SVA-S 32 SOC STR H-WHEEL	52	754	148B5532
32	1¼	SVA-S 32 SOC STR CAP	52	754	148B5533
40	1½	SVA-S 40 SOC STR H-WHEEL	52	754	148B5632
40	1½	SVA-S 40 SOC STR CAP	52	754	148B5633
50	2	SVA-S 50 SOC STR H-WHEEL	52	754	148B5732
50	2	SVA-S 50 SOC STR CAP	52	754	148B5733
FPT inside pipe thread, NPT (ANSI/ASME B 1.20.1)					
15	½	SVA-S 15 FTP STR H-WHEEL	52	754	148B5234
15	½	SVA-S 15 FTP STR CAP	52	754	148B5235
20	¾	SVA-S 20 FTP STR H-WHEEL	52	754	148B5334
20	¾	SVA-S 20 FTP STR CAP	52	754	148B5335
25	1	SVA-S 25 FTP STR H-WHEEL	52	754	148B5434
25	1	SVA-S 25 FTP STR CAP	52	754	148B5435
32	1¼	SVA-S 32 FTP STR H-WHEEL	52	754	148B5534
32	1¼	SVA-S 32 FTP STR CAP	52	754	148B5535

Ordering SVA-L

Example:
SVA-L 20 DIN angleway with hand wheel = **148B5340**

Important!
Where products need to be certified according to specific certification societies or where higher pressures are required, the relevant information should be included at the time of order.

ANG = Angleway
STR = Straightway

CAP = Cap
H-WHEEL = Hand wheel

SVA-L Angleway

Size mm	Size in.	Type	MWP bar	MWP psi	Code number
Butt-weld DIN (EN 10220)					
15	½	SVA-L 15 D ANG H-WHEEL	52	754	148B5240
15	½	SVA-L 15 D ANG CAP	52	754	148B5241
20	¾	SVA-L 20 D ANG H-WHEEL	52	754	148B5340
20	¾	SVA-L 20 D ANG CAP	52	754	148B5341
25	1	SVA-L 25 D ANG H-WHEEL	52	754	148B5440
25	1	SVA-L 25 D ANG CAP	52	754	148B5441
32	1¼	SVA-L 32 D ANG H-WHEEL	52	754	148B5540
32	1¼	SVA-L 32 D ANG CAP	52	754	148B5541
40	1½	SVA-L 40 D ANG H-WHEEL	52	754	148B5640
40	1½	SVA-L 40 D ANG CAP	52	754	148B5641
Butt-weld ANSI (B 36.10 Schedule 80)					
15	½	SVA-L 15 A ANG H-WHEEL	52	754	148B5260
15	½	SVA-L 15 A ANG CAP	52	754	148B5261
20	¾	SVA-L 20 A ANG H-WHEEL	52	754	148B5360
20	¾	SVA-L 20 A ANG CAP	52	754	148B5361
25	1	SVA-L 25 A ANG H-WHEEL	52	754	148B5460
25	1	SVA-L 25 A ANG CAP	52	754	148B5461
32	1¼	SVA-L 32 A ANG H-WHEEL	52	754	148B5560
32	1¼	SVA-L 32 A ANG CAP	52	754	148B5561
40	1½	SVA-L 40 A ANG H-WHEEL	52	754	148B5660
40	1½	SVA-L 40 A ANG CAP	52	754	148B5661
Socket welding ANSI (B 16.11)					
15	½	SVA-L 15 SOC ANG H-WHEEL	52	754	148B5262
15	½	SVA-L 15 SOC ANG CAP	52	754	148B5263
20	¾	SVA-L 20 SOC ANG H-WHEEL	52	754	148B5362
20	¾	SVA-L 20 SOC ANG CAP	52	754	148B5363
25	1	SVA-L 25 SOC ANG H-WHEEL	52	754	148B5462
25	1	SVA-L 25 SOC ANG CAP	52	754	148B5463
32	1¼	SVA-L 32 SOC ANG H-WHEEL	52	754	148B5562
32	1¼	SVA-L 32 SOC ANG CAP	52	754	148B5563
40	1½	SVA-L 40 SOC ANG H-WHEEL	52	754	148B5662
40	1½	SVA-L 40 SOC ANG CAP	52	754	148B5663
FPT inside pipe thread, NPT (ANSI/ASME B 1.20.1)					
15	½	SVA-L 15 FTP ANG H-WHEEL	52	754	148B5264
15	½	SVA-L 15 FTP ANG CAP	52	754	148B5265
20	¾	SVA-L 20 FTP ANG H-WHEEL	52	754	148B5364
20	¾	SVA-L 20 FTP ANG CAP	52	754	148B5365
25	1	SVA-L 25 FTP ANG H-WHEEL	52	754	148B5464
25	1	SVA-L 25 FTP ANG CAP	52	754	148B5465
32	1¼	SVA-L 32 FTP ANG H-WHEEL	52	754	148B5564
32	1¼	SVA-L 32 FTP ANG CAP	52	754	148B5565

SVA-L Straightway

Size mm	Size in.	Type	MWP bar	MWP psi	Code number
Butt-weld DIN (EN 10220)					
15	½	SVA-L 15 D STR H-WHEEL	52	754	148B5250
15	½	SVA-L 15 D STR CAP	52	754	148B5251
20	¾	SVA-L 20 D STR H-WHEEL	52	754	148B5350
20	¾	SVA-L 20 D STR CAP	52	754	148B5351
25	1	SVA-L 25 D STR H-WHEEL	52	754	148B5450
25	1	SVA-L 25 D STR CAP	52	754	148B5451
32	1¼	SVA-L 32 D STR H-WHEEL	52	754	148B5550
32	1¼	SVA-L 32 D STR CAP	52	754	148B5551
40	1½	SVA-L 40 D STR H-WHEEL	52	754	148B5650
40	1½	SVA-L 40 D STR CAP	52	754	148B5651
Butt-weld ANSI (B 36.10 Schedule 80)					
15	½	SVA-L 15 A STR H-WHEEL	52	754	148B5270
15	½	SVA-L 15 A STR CAP	52	754	148B5271
20	¾	SVA-L 20 A STR H-WHEEL	52	754	148B5370
20	¾	SVA-L 20 A STR CAP	52	754	148B5371
25	1	SVA-L 25 A STR H-WHEEL	52	754	148B5470
25	1	SVA-L 25 A STR CAP	52	754	148B5471
32	1¼	SVA-L 32 A STR H-WHEEL	52	754	148B5570
32	1¼	SVA-L 32 A STR CAP	52	754	148B5571
40	1½	SVA-L 40 A STR H-WHEEL	52	754	148B5670
40	1½	SVA-L 40 A STR CAP	52	754	148B5671
Socket welding ANSI (B 16.11)					
15	½	SVA-L 15 SOC STR H-WHEEL	52	754	148B5272
15	½	SVA-L 15 SOC STR CAP	52	754	148B5273
20	¾	SVA-L 20 SOC STR H-WHEEL	52	754	148B5372
20	¾	SVA-L 20 SOC STR CAP	52	754	148B5373
25	1	SVA-L 25 SOC STR H-WHEEL	52	754	148B5472
25	1	SVA-L 25 SOC STR CAP	52	754	148B5473
32	1¼	SVA-L 32 SOC STR H-WHEEL	52	754	148B5572
32	1¼	SVA-L 32 SOC STR CAP	52	754	148B5573
40	1½	SVA-L 40 SOC STR H-WHEEL	52	754	148B5672
40	1½	SVA-L 40 SOC STR CAP	52	754	148B5673
FPT inside pipe thread, NPT (ANSI/ASME B 1.20.1)					
15	½	SVA-L 15 FTP STR H-WHEEL	52	754	148B5274
15	½	SVA-L 15 FTP STR CAP	52	754	148B5275
20	¾	SVA-L 20 FTP STR H-WHEEL	52	754	148B5374
20	¾	SVA-L 20 FTP STR CAP	52	754	148B5375
25	1	SVA-L 25 FTP STR H-WHEEL	52	754	148B5474
25	1	SVA-L 25 FTP STR CAP	52	754	148B5475
32	1¼	SVA-L 32 FTP STR H-WHEEL	52	754	148B5574
32	1¼	SVA-L 32 FTP STR CAP	52	754	148B5575

The products are also available in stainless steel.
Please refer to the Danfoss brochure DKRCI.PD.K00.A for further details or contact your local Danfoss sales office.

Accessories

6T and 10-15T Nipple Kit solution

Code no.	
148B4244	ACCESSORY WELD.NIPPLE DN10 D + UNION NUT
148B4245	ACCESSORY WELD.NIPPLE DN6 A + UNION NUT
148B4246	ACCESSORY WELD.NIPPLE DN10 A + UNION NUT
148B4247	ACCESSORY WELD.NIPPLE DN15 A + UNION NUT
148B4184	ACCESSORY WELD.NIPPLE DN6 D + UNION NUT
148B4185	ACCESSORY WELD.NIPPLE DN15 D + UNION NUT

SNV-ST/SNV-SS – Stop needle valves

SNV valves are designed to meet all industrial refrigeration application requirements.
Designed as service valves they provide favourable flow characteristics. Available in standard version with normal or extended tube.

Advantages and features

- Applicable to all common refrigerants including R717 and R744 (CO_2) and non corrosive gases/liquids.
- Suitable for "heavy duty" industrial applications having a very sturdy and safe design including high pressures and wide temperature range.
- The SNV-ST and SNV-SS valves have backseating (metal to metal).
- Compact and light valve for easy handling and installation
- No special flow direction required.
- Provide high flow characteristics.
- Each valve type is clearly marked with type and size.
- Housing and bonnet material is low temperature steel (stainless steel for SNV-SS) according to requirements of the Pressure Equipment Directive and other international classification authorities.
- Valve safety is enhanced with the spindle being secured such that it cannot be unscrewed.
- Max. operating pressure:
  52 bar g (754 psig)
  Valves for higher operating pressure available on request
- Full temperature range:
  –60/+150°C (–76/+302°F)

Technical data and code numbers

Technical data

- *Refrigerants*
  Applicable to all common refrigerants including R 717 and R744 (CO_2) and non corrosive gases/liquids. For further information please see installation instruction for SNV-ST.
- *Temperature range* –60/+150°C (–76/+302°F).
- *Maximum working pressure* The valve is designed for: Maximum operating pressure of 52 bar g (754 psig).
  Valves for higher operating pressure available on request.

Code numbers

How to order
The table below is used to identify the valve required.
Please note that the type codes only serve to identify the valves, some of which may not form part of the standard product range.

Important!
Where products need to be certified according to specific certification societies or where higher pressures are required, the relevant information should be included at the time of order.

SNV-ST

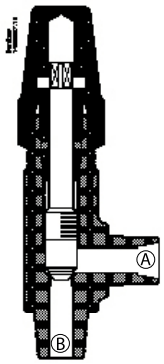

Fig. 1

SNV-ST / SNV-SS (extended branch)

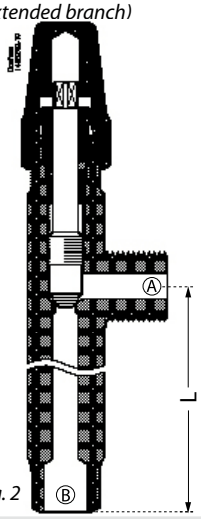

Fig. 2

SNV-ST (manometer connection)

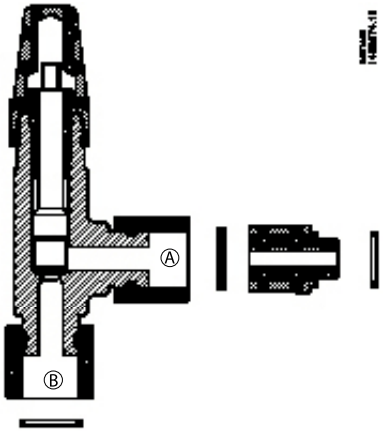

Fig. 3

See figure 1

Side branch connection A	Bottom branch connection B	Type	Quantity	Code no.
CD 10	CD 10	SNV-ST CD10-CD10	1 pc.	148B3740
CD 10	CD 10	SNV-ST CD10-CD10	30 pcs.	148B4177
CD 10	¼ MPT	SNV-ST CD10-1/4MPT	1 pc.	148B3741
CD 6	¼ MPT	SNV-ST CD6-1/4MPT	1 pc.	148B3742
CD 10	⅜ MPT	SNV-ST CD10-3/8MPT	1 pc.	148B3743
CD 6	⅜ MPT	SNV-ST CD6-3/8MPT	1 pc.	148B3744
G ½ (external)	G ½ (external)	SNV-ST G1/2-G1/2	1 pc.	148B3745
G ½ (external)	G ½ (external)	SNV-ST G1/2-G1/2	30 pcs.	148B4179
¼ FPT	¼ MPT	SNV-ST 1/4FPT-1/4MPT	1 pc.	148B3746
¼ FPT	¼ MPT	SNV-ST 1/4FPT-1/4MPT	30 pcs.	148B4180
⅜ FPT	⅜ MPT	SNV-ST 3/8FPT-3/8MPT	1 pc.	148B3747
⅜ FPT	⅜ MPT	SNV-ST 3/8FPT-3/8MPT	30 pcs.	148B4181
⅜ FPT	½ MPT	SNV-ST 3/8FPT-1/2MPT	30 pcs.	148B4233
¼ FPT	¼ FPT	SNV-ST 1/4FPT-1/4FPT	30 pcs.	148B4223
½ MPT	½ MPT	SNV-ST 1/2MPT-1/2MPT	30 pcs.	148B4224
⅜ FPT	⅜ FPT	SNV-ST 3/8FPT-3/8FPT	30 pcs.	148B4225
½ MPT	⅜ FPT	SNV-ST 1/2MPT-3/8FPT	30 pcs.	148B4226
CD 6	¼ MPT	SNV-ST CD6-1/4MPT*	30 pcs.	148B4216
7/16 UNF	¼ MPT	SNV-ST 7/16UNF-1/4MPT	30 pcs.	148B4230

* With handwheel

Extended Branch

See figure 2
L50 = 50 mm (2 in.)
L100 = 100 mm (4 in.)
L125 = 125 mm (5 in.)
L150 = 150 mm (6 in.)

Side branch connection A	Bottom branch connection B	Type	Quantity	Code no.
CD10	W½ L100	SNV-ST CD10-W1/2 L100	1 pc.	148B3768
CD10	W½ L100	SNV-ST CD10-W1/2 L100	30 pcs.	148B4210
G ½ (external)	W½ L100	SNV-ST G1/2-W1/2 L100	1 pc.	148B3769
G ½ (external)	W½ L100	SNV-ST G1/2-W1/2 L100	30 pcs.	148B4211
G ½ (external)	W½ L125	SNV-ST G1/2-W1/2 L125	30 pcs.	148B4219
G ½ (external)	W½ L50	SNV-ST G1/2-W1/2 L50	30 pcs.	148B4218
G ¼ (internal)	R¼ L50 (external)	SNV-ST G1/4-R1/4 L50	30 pcs.	148B4231
¼ FPT	¼ MPT L100	SNV-ST 1/4FPT-1/4MPT L100	30 pcs.	148B4232
G ½ (external)	W½L50	SNV-SS G1/2-W1/2 L50	1 pc.	148B4265
G ½ (external)	W½L150	SNV-SS G1/2-W1/2 L150	1 pc.	148B4266
G ¾(external)	W½L125	SNV-ST G3/8-W1/2 L125	30 pcs.	148B4336

Manometer connection

See figure 3

Side branch connection	Bottom branch connection	Type	Quantity	Code no.
G ½	G ½	SNV-ST G½ Man	1 pc.	148B3778**

** Including adaptor for connection to ICS/PM valve

FIA – Flexline™ Filters (SVL platform)

FIA filters are a range of angleway and straightway filters, which are carefully designed to give favourable flow conditions. The design makes the filter easy to install, and ensures quick filter inspection and cleaning.

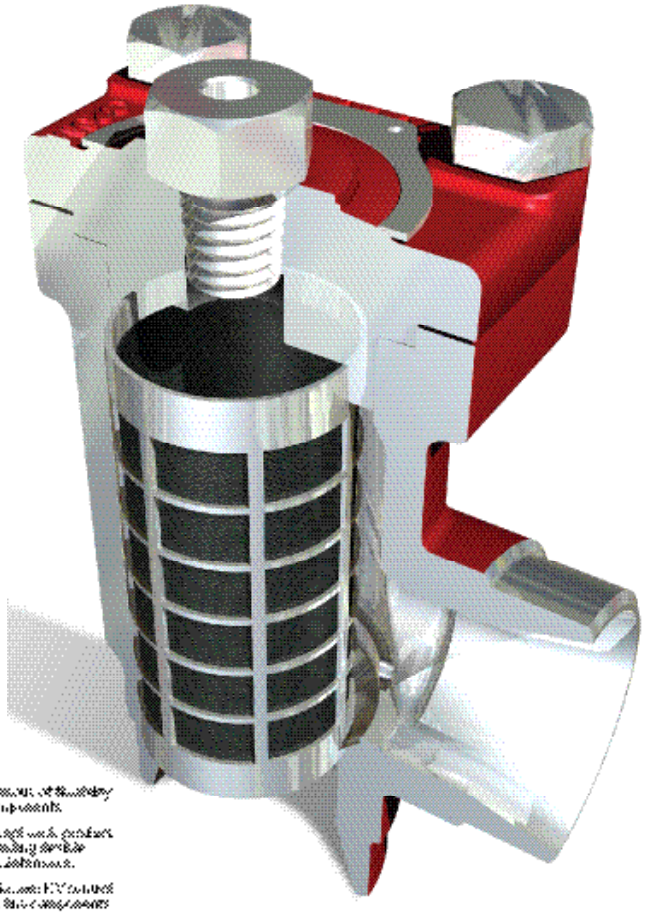

Advantages and features

- Housing is standard SVA angleway or straightway housing allowing other inserts from the SVL platform to be installed.
- Applicable to all common refrigerants including flammable hydrocarbons and all non-corrosive gases/liquids. Can be used in chemical and petro-chemical applications.
- Filter net of stainless steel mounted direct without extra gaskets means easy servicing.
- Two types of filter inserts are available:
  - A plain insert of stainless steel.
  - A pleated insert (DN 15-200) with extra large surface, which ensures long intervals between cleaning and low pressure drop.
- FIA 15-40 (½ – 1 ½ in.):
  A special insert (50µ) can be used in combination with a standard version when cleaning a plant during commissioning.
- FIA 50-200 (2 - 8 in.):
  A large capacity filter bag (50µ) can be inserted for cleaning plant during commissioning.
- FIA 50-200 (2 - 8 in.) can be equipped with a magnetic insert for detention of iron particles and other magnetic particles.
- Each filter clearly marked with type, size and performance range
- Housing and bonnet of low temperature steel in accordance with the requirements of the Pressure Equipment Directive and those of other international classification authorities
- Temperature range:
  –60/+150°C (–76/+302°F)
- Max. working pressure:
  52 bar g (754 psi g)

Technical data, code numbers and accessories

Technical data

- *Refrigerants*
  Applicable to all common refrigerants including flammable refrigerants and all non-corrosive gases/liquids. For further information please see installation instruction for FIA.
- *Temperature range*
  –60°C/+150°C (–76°F/+302°F).
- *Max. working pressure:*
  52 bar g (754 psi g).

Code numbers

The table below is used to identify the filter required. Please note that you have to order **FIA filter without element, a filter element** and **accessories.**

Example:
FIA 50 D ANG + FIA-X 50 150µ Filter Element + Filter Bag =
148H5912 + **148H3130** + **148H3150**

Size		Type	FIA Without Filter Element	Filter Element 100µ 150 mesh	Filter Element 150µ 100 mesh	Filter Element 250µ 72 mesh	Filter Element 500µ 38 mesh	Pleated filter element 150µ 100 mesh	Pleated filter element 250µ 72 mesh	Pleated filter element 500µ 38 mesh
mm	in.									
Butt-weld DIN (EN 10220) - Angleway										
15	½	FIA 15 D ANG	148B5242	148H3122	148H3124	148H3126	148H3128	148H3303	-	-
20	¾	FIA 20 D ANG	148B5342							
25	1	FIA 25 D ANG	148B5442							
32	1¼	FIA 32 D ANG	148B5543	148H3123	148H3125	148H3127	148H3129	148H3304	148H3269	-
40	1½	FIA 40 D ANG	148B5624							
50	2	FIA 50 D ANG	148B5712	148H3157	148H3130	148H3138	148H3144	148H3179	148H3184	148H3189
65	2½	FIA 65 D ANG	148B5812	-	148H3131	148H3139	148H3145	148H3180	148H3185	148H3190
80	3	FIA 80 D ANG	148B5905	-	148H3119	148H3120	148H3121	148H3181	148H3186	148H3191
100	4	FIA 100 D ANG	148B6006	-	148H3132	148H3140	148H3146	148H3182	148H3187	148H3192
125	5	FIA 125 D ANG	148B6105	-	148H3133	148H3141	148H3147	148H3183	148H3188	148H3193
150	6	FIA 150 D ANG	148B6202	-	148H3134	148H3142	148H3148	148H3226	-	-
200	8	FIA 200 D ANG	148B6302	-	148H3135	148H3143	148H3149	-	-	-
Butt-weld DIN (EN 10220) - Straightway										
15	½	FIA 15 D STR	148B5243	148H3122	148H3124	148H3126	148H3128	148H3303	-	-
20	¾	FIA 20 D STR	148B5343							
25	1	FIA 25 D STR	148B5443							
32	1¼	FIA 32 D STR	148B5544	148H3123	148H3125	148H3127	148H3129	148H3304	148H3269	-
40	1½	FIA 40 D STR	148B5625							
50	2	FIA 50 D STR	148B5713	148H3157	148H3130	148H3138	148H3144	148H3179	148H3184	148H3189
65	2½	FIA 65 D STR	148B5813	-	148H3131	148H3139	148H3145	148H3180	148H3185	148H3190
80	3	FIA 80 D STR	148B5906	-	148H3119	148H3120	148H3121	148H3181	148H3186	148H3191
100	4	FIA 100 D STR	148B6007	-	148H3132	148H3140	148H3146	148H3182	148H3187	148H3192
125	5	FIA 125 D STR	148B6106	-	148H3133	148H3141	148H3147	148H3183	148H3188	148H3193
150	6	FIA 150 D STR	148B6203	-	148H3134	148H3142	148H3148	148H3226	-	-
200	8	FIA 200 D STR	148B6303	-	148H3135	148H3143	148H3149	-	-	-
Butt-weld ANSI (B 36.10 Schedule 80) - Angleway										
15	½	FIA 15 A ANG	148B5244	148H3122	148H3124	148H3126	148H3128	148H3303	-	-
20	¾	FIA 20 A ANG	148B5344							
25	1	FIA 25 A ANG	148B5444							
32	1¼	FIA 32 A ANG	148B5545	148H3123	148H3125	148H3127	148H3129	148H3304	148H3269	-
40	1½	FIA 40 A ANG	148B5642							
Butt-weld ANSI (B 36.10 Schedule 80) - Straightway										
15	½	FIA 15 A STR	148B5247	148H3122	148H3124	148H3126	148H3128	148H3303	-	-
20	¾	FIA 20 A STR	148B5347							
25	1	FIA 25 A STR	148B5447							
32	1¼	FIA 32 A STR	148B5552	148H3123	148H3125	148H3127	148H3129	148H3304	148H3269	-
40	1½	FIA 40 A STR	148B5644							
Butt-weld ANSI (B 36.10 Schedule 40) - Angleway										
50	2	FIA 50 A ANG	148B5714	148H3157	148H3130	148H3138	148H3144	148H3179	148H3184	148H3189
65	2½	FIA 65 A ANG	148B5814	-	148H3131	148H3139	148H3145	148H3180	148H3185	148H3190
80	3	FIA 80 A ANG	148B5907	-	148H3119	148H3120	148H3121	148H3181	148H3186	148H3191
100	4	FIA 100 A ANG	148B6008	-	148H3132	148H3140	148H3146	148H3182	148H3187	148H3192
125	5	FIA 125 A ANG	148B6107	-	148H3133	148H3141	148H3147	148H3183	148H3188	148H3193
150	6	FIA 150 A ANG	148B6204	-	148H3134	148H3142	148H3148	148H3226	-	-
200	8	FIA 200 A ANG	148B6304	-	148H3135	148H3143	148H3149	-	-	-

Code numbers *(continued)*

Size mm	Size in.	Type	FIA Without Filter Element	Filter Element 100µ 150 mesh	Filter Element 150µ 100 mesh	Filter Element 250µ 72 mesh	Filter Element 500µ 38 mesh	Pleated filter element 150µ 100 mesh	Pleated filter element 250µ 72 mesh	Pleated filter element 500µ 38 mesh
Butt-weld ANSI (B 36.10 Schedule 40) - Straightway										
50	2	FIA 50 A STR	148B5716	148H3157	148H3130	148H3138	148H3144	148H3179	148H3184	148H3189
65	2½	FIA 65 A STR	148B5815	-	148H3131	148H3139	148H3145	148H3180	148H3185	148H3190
80	3	FIA 80 A STR	148B5908	-	148H3119	148H3120	148H3121	148H3181	148H3186	148H3191
100	4	FIA 100 A STR	148B6009	-	148H3132	148H3140	148H3146	148H3182	148H3187	148H3192
125	5	FIA 125 A STR	148B6108	-	148H3133	148H3141	148H3147	148H3183	148H3188	148H3193
150	6	FIA 150 A STR	148B6205	-	148H3134	148H3142	148H3148	148H3226	-	-
200	8	FIA 200 A STR	148B6305	-	148H3135	148H3143	148H3149	-	-	-
FPT inside pipe thread, NPT (ANSI/ASME B 1.20.1) - Angleway										
15	½	FIA 15 FTP ANG	148B5246	148H3122	148H3124	148H3126	148H3128	148H3303	-	-
20	¾	FIA 20 FTP ANG	148B5346							
25	1	FIA 25 FTP ANG	148B5446	148H3123	148H3125	148H3127	148H3129	148H3304	148H3269	-
32	1¼	FIA 32 FTP ANG	148B5547							
FPT inside pipe thread, NPT (ANSI/ASME B 1.20.1) - Straightway										
15	½	FIA 15 FTP STR	148B5249	148H3122	148H3124	148H3126	148H3128	148H3303	-	-
20	¾	FIA 20 FTP STR	148B5349							
25	1	FIA 25 FTP STR	148B5449	148H3123	148H3125	148H3127	148H3129	148H3304	148H3269	-
32	1¼	FIA 32 FTP STR	148B5549							
Socket welding ANSI (B 16.11) - Angleway										
15	½	FIA 15 SOC ANG	148B5245	148H3122	148H3124	148H3126	148H3128	148H3303	-	-
20	¾	FIA 20 SOC ANG	148B5345							
25	1	FIA 25 SOC ANG	148B5445	148H3123	148H3125	148H3127	148H3129	148H3304	148H3269	-
32	1¼	FIA 32 SOC ANG	148B5546							
40	1½	FIA 40 SOC ANG	148B5643							
50	2	FIA 50 SOC ANG	148B5715	148H3157	148H3130	148H3138	148H3144	148H3179	148H3184	148H3189
Socket welding ANSI (B 16.11) - Straightway										
15	½	FIA 15 SOC STR	148B5248	148H3122	148H3124	148H3126	148H3128	148H3303	-	-
20	¾	FIA 20 SOC STR	148B5348							
25	1	FIA 25 SOC STR	148B5448	148H3123	148H3125	148H3127	148H3129	148H3304	148H3269	-
32	1¼	FIA 32 SOC STR	148B5548							
40	1½	FIA 40 SOC STR	148B5645							
50	2	FIA 50 SOC STR	148B5717	148H3157	148H3130	148H3138	148H3144	148H3179	148H3184	148H3189

SOC = Socket welding
FPT = Inside pipe thread

ANG = Angleway
STR = Straightway

The products are also available in stainless steel.
Please refer to the Danfoss brochure DKRCI.PD.K00.A for further details or contact your local Danfoss sales office.

Accessories

Part	Accessory for	Code number
Magnet insert	FIA 65-100	148H3447
	FIA 125-200	148H3448

Part	Accessory for	Code number
Filter element µ150 with removable element µ50 for the first start up	FIA 15-20	148H3301
	FIA 25-40	148H3302

Part	Accessory for	Code number
Filter bag	FIA 50	148H3150
	FIA 65	148H3151
	FIA 80	148H3152
	FIA 100	148H3153
	FIA 125	148H3154
	FIA 150	148H3155
	FIA 200	148H3156

Part	Accessory for	Code number
Purge valve complete	FIA 50 - 300	148B3745
Blind nut with gasket		148H3450

Notes

REG-SA and REG-SB – Flexline™ Regulating valves

REG-SA and REG-SB are angleway and straightway hand regulating valves, which act as normal stop valves in closed position.
The valves are available in two different versions – REG-SA is for use in expansion lines (cone type A), while REG-SB is designed for regulation purposes in liquid lines (cone type B).

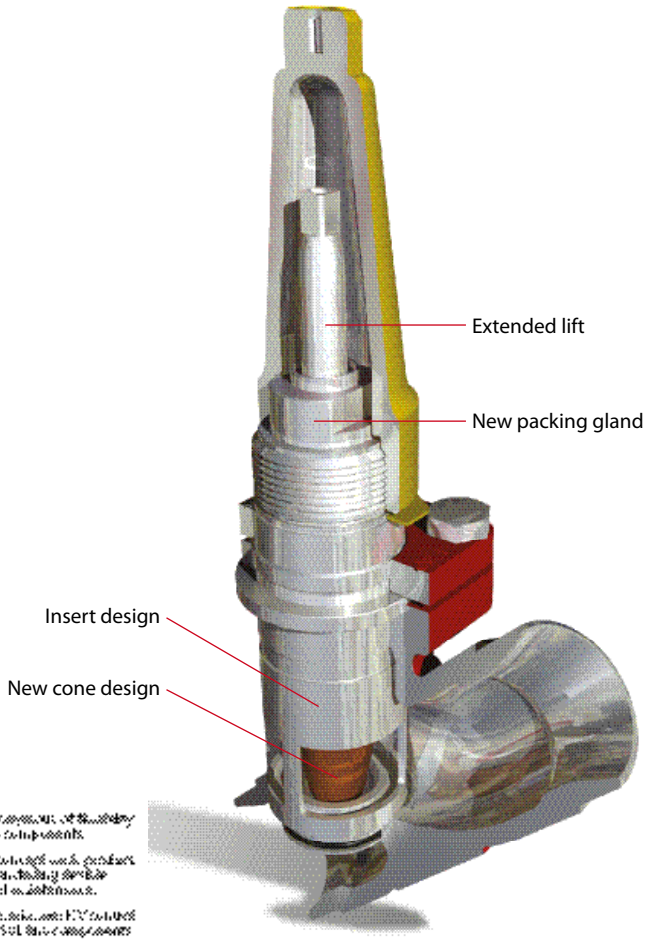

Advantages and features

- Housing is Standard SVL angleway or straightway housing allowing other inserts from the SVL platform to be installed. Applicable to all common non-flammable refrigerants and all non-corrosive gases/liquids.
  Can be used in chemical and petro-chemical applications.
- Designed to ensure perfect regulation
- Internal backseating enables replacement of the spindle seal whilst the valve is active, i.e. under pressure.
- Easy to disassemble for inspection and possible repair.
- Max. operating pressure:
  52 bar g (754 psi g)
- Temperature range:
  –60/+150°C (–76/+302°F)
- Acts as a normal stop valve in closed position.
- Housing and bonnet material is low temperature steel according to requirements of the Pressure Equipment Directive and other international classification authorities.

Technical data and code numbers

Technical data

- *Refrigerants*
  Applicable to all common non-flammable refrigerants and all non-corrosive gases/liquids.

  Can be used in chemical and petro-chemical applications.
- *Temperature range*
  –60/+150°C (–76/+302°F)
- *Max working pressure*
  52 bar g (754 psi g)
- *Flow coefficients*
  Flow coefficients for fully opened valves from k_v = 0.15 to 80 m^3/h (C_v = 0.17 to 92.5 USgal/min).

Code numbers

Example:
REG-SA (Cone A) 15 DIN
angleway = **148B5226**

Important!
Where products need to be certified according to specific certification societies or where higher pressures are required, the relevant information should be included at the time of order.

REG-SA (Cone type A)

Butt-weld DIN (EN 10220)

Size		Type	Code no.
mm	in.		
***Angleway** - REG-SA with cone type A*			
10	3/8	REG-SA 10 D ANG	148B5102
15	1/2	REG-SA 15 D ANG	148B5226
20	3/4	REG-SA 20 D ANG	148B5326
25	1	REG-SA 25 D ANG	148B5426
32	1 1/4	REG-SA 32 D ANG	148B5527
40	1 1/2	REG-SA 40 D ANG	148B5627

Butt-weld DIN (EN 10220)

Size		Type	Code no.
mm	in.		
***Straightway** - REG-SA with cone type A*			
10	3/8	REG-SA 10 D STR	148B5104
15	1/2	REG-SA 15 D STR	148B5228
20	3/4	REG-SA 20 D STR	148B5328
25	1	REG-SA 25 D STR	148B5428
32	1 1/4	REG-SA 32 D STR	148B5528
40	1 1/2	REG-SA 40 D STR	148B5629

Butt-weld ANSI (B 36.10 Schedule 80)

Size		Type	Code no.
mm	in.		
***Angleway** - REG-SA with cone type A*			
10	3/8	REG-SA 10 A ANG	148B5106
15	1/2	REG-SA 15 A ANG	148B5202
20	3/4	REG-SA 20 A ANG	148B5302
25	1	REG-SA 25 A ANG	148B5402
32	1 1/4	REG-SA 32 A ANG	148B5502
40	1 1/2	REG-SA 40 A ANG	148B5602

Butt-weld ANSI (B 36.10 Schedule 80)

Size		Type	Code no.
mm	in.		
***Straightway** - REG-SA with cone type A*			
10	3/8	REG-SA 10 A STR	148B5116
15	1/2	REG-SA 15 A STR	148B5212
20	3/4	REG-SA 20 A STR	148B5312
25	1	REG-SA 25 A STR	148B5412
32	1 1/4	REG-SA 32 A STR	148B5512
40	1 1/2	REG-SA 40 A STR	148B5612

Socket welding ANSI (B 16.11)

Size		Type	Code no.
mm	in.		
***Angleway** - REG-SA with cone type A*			
15	1/2	REG-SA 15 SOC ANG	148B5204
20	3/4	REG-SA 20 SOC ANG	148B5304
25	1	REG-SA 25 SOC ANG	148B5404
32	1 1/4	REG-SA 32 SOC ANG	148B5504
40	1 1/2	REG-SA 40 SOC ANG	148B5604

Socket welding ANSI (B 16.11)

Size		Type	Code no.
mm	in.		
***Straightway** - REG-SA with cone type A*			
15	1/2	REG-SA 15 SOC STR	148B5214
20	3/4	REG-SA 20 SOC STR	148B5314
25	1	REG-SA 25 SOC STR	148B5414
32	1 1/4	REG-SA 32 SOC STR	148B5514
40	1 1/2	REG-SA 40 SOC STR	148B5614

FPT inside pipe thread, NPT (ANSI/ASME B 1.20.1)

Size		Type	Code no.
mm	in.		
***Angleway** - REG-SA with cone type A*			
15	1/2	REG-SA 15 FTP ANG	148B5206
20	3/4	REG-SA 20 FTP ANG	148B5306
25	1	REG-SA 25 FTP ANG	148B5406
32	1 1/4	REG-SA 32 FTP ANG	148B5506

FPT inside pipe thread, NPT (ANSI/ASME B 1.20.1)

Size		Type	Code no.
mm	in.		
***Straightway** - REG-SA with cone type A*			
15	1/2	REG-SA 15 FTP STR	148B5216
20	3/4	REG-SA 20 FTP STR	148B5316
25	1	REG-SA 25 FTP STR	148B5416
32	1 1/4	REG-SA 32 FTP STR	148B5516

D = Butt-weld DIN
A = Butt-weld ANSI
SOC = Socket weld
FPT = Inside pipe thread

ANG = Angleway
STR = Straightway

Code numbers *(continued)*

Example:
REG-SB (Cone B) 15 DIN
angleway = **148B5227**

Important!
Where products need to be certified according to specific certification societies or where higher pressures are required, the relevant information should be included at the time of order.

REG-SB (Cone type B)

Butt-weld DIN (EN 10220)

Size		Type	Code no.
mm	in.		
***Angleway** - REG-SB with cone type B*			
10	3/8	REG-SB 10 D ANG	148B5103
15	1/2	REG-SB 15 D ANG	148B5227
20	3/4	REG-SB 20 D ANG	148B5327
25	1	REG-SB 25 D ANG	148B5427
32	1 1/4	REG-SB 32 D ANG	148B5526
40	1 1/2	REG-SB 40 D ANG	148B5626
50	2	REG-SB 50 D ANG	148B5726
65	2 1/2	REG-SB 65 D ANG	148B5826

Butt-weld DIN (EN 10220)

Size		Type	Code no.
mm	in.		
***Straightway** - REG-SB with cone type B*			
10	3/8	REG-SB 10 D STR	148B5105
15	1/2	REG-SB 15 D STR	148B5229
20	3/4	REG-SB 20 D STR	148B5329
25	1	REG-SB 25 D STR	148B5429
32	1 1/4	REG-SB 32 D STR	148B5529
40	1 1/2	REG-SB 40 D STR	148B5628

Butt-weld ANSI (B 36.10 Schedule 80)

Size		Type	Code no.
mm	in.		
***Angleway** - REG-SB with cone type B*			
10	3/8	REG-SB 10 A ANG	148B5107
15	1/2	REG-SB 15 A ANG	148B5203
20	3/4	REG-SB 20 A ANG	148B5303
25	1	REG-SB 25 A ANG	148B5403
32	1 1/4	REG-SB 32 A ANG	148B5503
40	1 1/2	REG-SB 40 A ANG	148B5603

Butt-weld ANSI (B 36.10 Schedule 80)

Size		Type	Code no.
mm	in.		
***Straightway** - REG-SB with cone type B*			
10	3/8	REG-SB 10 A STR	148B5117
15	1/2	REG-SB 15 A STR	148B5213
20	3/4	REG-SB 20 A STR	148B5313
25	1	REG-SB 25 A STR	148B5413
32	1 1/4	REG-SB 32 A STR	148B5513
40	1 1/2	REG-SB 40 A STR	148B5613

Butt-weld ANSI (B 36.10 Schedule 40)

Size		Type	Code no.
mm	in.		
***Angleway** - REG-SB with cone type B*			
50	2	REG-SB 50 A ANG	148B5706
65	2 1/2	REG-SB 65 A ANG	148B5806

Butt-weld ANSI (B 36.10 Schedule 40)

Size		Type	Code no.
mm	in.		
***Angleway** - REG-SB with cone type B*			
50	2	REG-SB 50 A STR	148B5724
65	2 1/2	REG-SB 65 A STR	148B5809

Socket welding ANSI (B 16.11)

Size		Type	Code no.
mm	in.		
***Angleway** - REG-SB with cone type B*			
15	1/2	REG-SB 15 SOC ANG	148B5205
20	3/4	REG-SB 20 SOC ANG	148B5305
25	1	REG-SB 25 SOC ANG	148B5405
32	1 1/4	REG-SB 32 SOC ANG	148B5505
40	1 1/2	REG-SB 40 SOC ANG	148B5605
50	2	REG-SB 50 SOC ANG	148B5727

Socket welding ANSI (B 16.11)

Size		Type	Code no.
mm	in.		
***Straightway** - REG-SB with cone type B*			
15	1/2	REG-SB 15 SOC STR	148B5215
20	3/4	REG-SB 20 SOC STR	148B5315
25	1	REG-SB 25 SOC STR	148B5415
32	1 1/4	REG-SB 32 SOC STR	148B5515
40	1 1/2	REG-SB 40 SOC STR	148B5615
50	2	REG-SB 50 SOC STR	148B5725

FPT inside pipe thread, NPT (ANSI/ASME B 1.20.1)

Size		Type	Code no.
mm	in.		
***Angleway** - REG-SB with cone type B*			
15	1/2	REG-SB 15 FTP ANG	148B5207
20	3/4	REG-SB 20 FTP ANG	148B5307
25	1	REG-SB 25 FTP ANG	148B5407
32	1 1/4	REG-SB 32 FTP ANG	148B5507

FPT inside pipe thread, NPT (ANSI/ASME B 1.20.1)

Size		Type	Code no.
mm	in.		
***Straightway** - REG-SB with cone type B*			
15	1/2	REG-SB 15 FTP STR	148B5217
20	3/4	REG-SB 20 FTP STR	148B5317
25	1	REG-SB 25 FTP STR	148B5417
32	1 1/4	REG-SB 32 FTP STR	148B5517

D = Butt-weld DIN
A = Butt-weld ANSI
SOC = Socket weld
FPT = Inside pipe thread

ANG = Angleway
STR = Straightway

Notes

SCA-X – Flexline™ Stop check valves and CHV-X – check valves

SCA-X are check valves with a built-in stop valve function. CHV-X are check valves only. SCA-X/CHV-X are available in angleway versions.
The valves are designed to open at very low differential pressures, allow favourable flow conditions and are easy to disassemble for inspection and service.

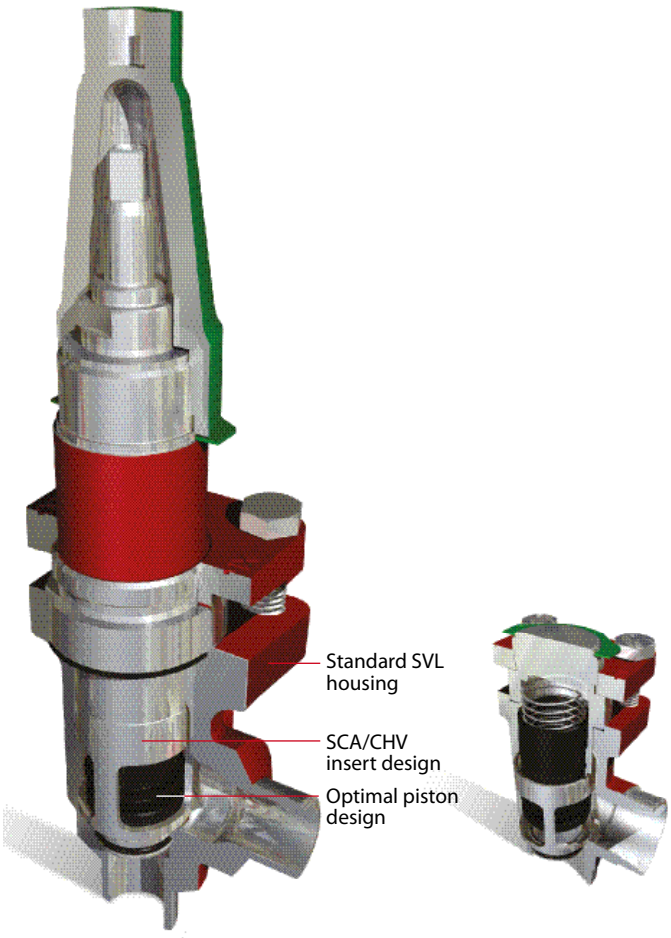

Advantages and features

- Applicable to all common non-flammable refrigerants and all non-corrosive gases/liquids.
  Can be used in chemical and petro-chemical applications.
- Housing is Standard SVL angleway housing allowing other inserts from the SVL platform to be installed.
- Designed to open at a very low differential pressure of 0.04 bar (0.58 psig).
- Designed with a built-in damping chamber preventing valve flutter in case of low refrigerant velocity and/or low density.
- Each valve is clearly marked with type, size and performance range.
- Easy to disassemble for inspection and service.
- Internal backseating enables replacement of the spindle seal whilst the valve is active, i.e. under pressure.
- Optimal flow characteristics ensuring quick opening to the fully open position.
- Protection against pulsation by built-in damping facility.
- Housing and bonnet material is low temperature steel according to requirements of the Pressure Equipment Directive and other international classification authorities.
- Equipped with Stainless steel bolts.
- Max. working pressure:
  52 bar g (754 psi g)
- Temperature range:
  –60°C/+150° (–76°F/+302°F)

Technical data and code numbers

Technical data

- *Refrigerants*
  Applicable to all common non-flammable refrigerants and all non-corrosive gases/liquids.
  For further information refer to the product instruction for SCA-X/CHV-X.
- *Temperature range*
  –60/+150°C (–76/+302°F).
- *Max. working pressure*
  52 bar g (754 psig).

Code numbers

How to order
The table below is used to identify the valve required.
Please note that the type codes only serve to identify the valves, some of wich may not form part of the standard product range.

Valve type	SCA-X CHV-X	Stop Check Valve Check Valve			
			ANSI	DIN	SOC
(valve size measured on the connection diameter)	**15**	DN 15	x	x	
	20	DN 20	x	x	
	25	DN 25	x	x	
	32	DN 32	x	x	
	40	DN 40	x	x	
	50	DN 50	x	x	x
	65	DN 65	x	x	
	80	DN 80	x	x	
	100	DN 100	x	x	
	125	DN 125	x	x	
Connections	**A**	Welding branches: ANSI B 31.5 schedule 80 DN 15 - 40 (½ - 1½ in.) Welding branches: ANSI B 31.5 schedule 40 DN 50 - 125 (2 - 5 in.)			
	D	Welding branches: EN 10220			
Valve housing	**ANG**	Angle flow			

Important!
Where products need to be certified according to specific certification societies, or where higher pressures are required, the relevant information should be included at the time of order.

SCA-X Butt-weld DIN (EN 10220)

Size		Type	Code no.
mm	in.		
15	½	SCA-X 15 D ANG	148B5208
20	¾	SCA-X 20 D ANG	148B5308
25	1	SCA-X 25 D ANG	148B5408
32	1¼	SCA-X 32 D ANG	148B5508
40	1½	SCA-X 40 D ANG	148B5608
50	2	SCA-X 50 D ANG	148B5702
65	2½	SCA-X 65 D ANG	148B5803
80	3	SCA-X 80 D ANG	148B5902
100	4	SCA-X 100 D ANG	148B6002
125	5	SCA-X 125 D ANG	148B6102

CHV-X Butt-weld DIN (EN 10220)

Size		Type	Code no.
mm	in.		
15	½	CHV-X 15 D ANG	148B5236
20	¾	CHV-X 20 D ANG	148B5336
25	1	CHV-X 25 D ANG	148B5436
32	1¼	CHV-X 32 D ANG	148B5536
40	1½	CHV-X 40 D ANG	148B5636
50	2	CHV-X 50 D ANG	148B5736
65	2½	CHV-X 65 D ANG	148B5838
80	3	CHV-X 80 D ANG	148B5936
100	4	CHV-X 100 D ANG	148B6036
125	5	CHV-X 125 D ANG	148B6136

SCA-X Butt-weld ANSI (B 36.10 Schedule 80)

Size		Type	Code no.
mm	in.		
15	½	SCA-X 15 A ANG	148B5209
20	¾	SCA-X 20 A ANG	148B5309
25	1	SCA-X 25 A ANG	148B5409
32	1¼	SCA-X 32 A ANG	148B5509
40	1½	SCA-X 40 A ANG	148B5609

CHV-X Butt-weld ANSI (B 36.10 Schedule 80)

Size		Type	Code no.
mm	in.		
15	½	CHV-X 15 A ANG	148B5237
20	¾	CHV-X 20 A ANG	148B5337
25	1	CHV-X 25 A ANG	148B5437
32	1¼	CHV-X 32 A ANG	148B5537
40	1½	CHV-X 40 A ANG	148B5637

SCA-X Butt-weld ANSI (B 36.10 Schedule 40)

Size		Type	Code no.
mm	in.		
50	2	SCA-X 50 A ANG	148B5703
65	2½	SCA-X 65 A ANG	148B5802
80	3	SCA-X 80 A ANG	148B5903
100	4	SCA-X 100 A ANG	148B6004
125	5	SCA-X 125 A ANG	148B6103

CHV-X Butt-weld ANSI (B 36.10 Schedule 40)

Size		Type	Code no.
mm	in.		
50	2	CHV-X 50 A ANG	148B5737
65	2½	CHV-X 65 A ANG	148B5837
80	3	CHV-X 80 A ANG	148B5937
100	4	CHV-X 100 A ANG	148B6037
125	5	CHV-X 125 A ANG	148B6137

SCA-X Socket welding ANSI (B 16.11)

Size		Type	Code no.
mm	in.		
50	2	SCA-X 50 SOC ANG	148B5704

CHV-X Socket welding ANSI (B 16.11)

Size		Type	Code no.
mm	in.		
32	1¼	CHV 32 SOC ANG	148B5539
50	2	CHV 50 SOC ANG	148B5740

ANG = Angleway
The products are also available in stainless steel.
Please refer to the Danfoss brochure DKRCI.PD.K00.A for further details or contact your local Danfoss sales office.

NRVA – Check valves

Check valve type NRVA can be used in liquid, suction and hot gas lines in refrigeration and air conditioning plant with ammonia.
NRVA can also be used in refrigerating systems with fluorinated refrigerants.

Advantages and features

- Ensures correct direction of flow.
- Valve housing made of steel.
- Available for 40 bar g (580 psig) working pressure.
- Large range of flanges with connection dimensions in accordance with standards: DIN, ANSI, SOC, SA and FPT.
- Fitted with damping piston that makes the valves suitable for installation in lines where pulsation can occur, e.g. in the discharge line from the compressor.

Technical data and code numbers

Technical data

- *Refrigerants*
  Can be used for all normal, non-flammable refrigerants, including R 717, and non-corrosive gases/liquids – assuming seals of the correct material are used.For further information please see installation instruction for NRVA.
  Use with flammable hydrocarbons cannot be recommended.
- *Temperature range:* –50°C / +140°C (–58°F / +284°F).
- *Pressure range* The valve is designed for: Max. working pressure: 40 bar g (580 psig).

Code numbers

Complete valves incl. DIN 2448 flange:

Type	Weld flange connection	Code no.		Dp [2]				k_v value [3]	C_v value [4]
		Valve	Spec. spring [1]	With standard spring		With spec. spring [1]			
	in.			bar	psig	bar	psig	m³/h	gal/min
NRVA 15	1/2	020-2000	020-2307	0.12	1.7	0.3	4.4	5	6
NRVA 20	3/4	020-2001	020-2307	0.12	1.7	0.3	4.4	6	7
NRVA 25	1	020-2002	020-2317	0.12	1.7	0.3	4.4	19	22
NRVA 32	1 1/4	020-2003	020-2317	0.12	1.7	0.3	4.4	20	23
NRVA 40	1 1/2	020-2004	020-2327	0.07	1.0	0.4	5.8	44	51
NRVA 50	2	020-2005	020-2327	0.07	1.0	0.4	5.8	44	51
NRVA 65	2 1/2	020-2006	020-2337	0.07	1.0	0.4	5.8	75	87

[1] A special type spring can be supplied to replace the standard valve spring.
[2] Δp = the minimum pressure differential at which the valve is completely open.
[3] The k_v value is the flow of water in m³/h at a pressure drop across valve of 1 bar, ρ = 1000 kg/m³.
[4] The C_v value is the flow of water in gal/min at a pressure drop across valve of 1 psig, ρ = 10 lbs/gal.

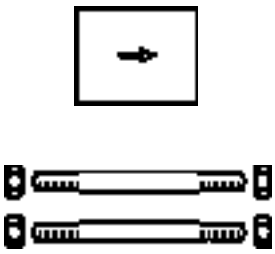

Valve body without flanges:

Type	Code no.
NRVA 15	020-2020
NRVA 20	020-2020
NRVA 25	020-2022
NRVA 32	020-2022
NRVA 40	020-2024
NRVA 50	020-2024
NRVA 65	020-2026

Staybolts and gaskets:

Type	Dimensions	Code no.
NRVA 15 / 20	M 12 × 115 mm	006-1107
NRVA 25 / 32	M 12 × 148 mm	006-1135
NRVA 40 / 50	M 12 × 167 mm	006-1137
NRVA 65	M 16 × 200 mm	006-1138

SFA 15 – Safety relief valves

SFA 15 are standard, back pressure dependent safety relief valves in angle-way execution, specially designed for protection of vessels and other components against excessive pressure. The valve is designed to meet the strict quality demands and safety requirements for refrigeration installations, specified by the international classification societies.The inlet flow diameters of the valves are: 13 mm (½ in.) for SFA 15The valves can be delivered with set pressures between 10 and 40 bar g (145 and 580 psi g).

Advantages and features

- Applicable for the refrigerants R717 (ammonia, NH_3), HFC, HCFC (e.g. R22, R134a, R404A) and other refrigerants (dependent on sealing materials compatibility) within a temperature range of –30°C/+100°C (–22°F/+212°F).

Technical data and code numbers

Technical data

- Refrigerants
  Applicable for the refrigerants R717 (ammonia, NH_3), HFC, HCFC (e.g. R22, R134a, R404A) and other refrigerants dependent on sealing material compatibility within a temperature range of –30°C/+100°C (–22°F/+212°F).
  Flammable hydrocarbons are not recommended.
- Pressure
  Pressure setting range: 10 - 40 bar g
  (145 - 580 psi g).

  Important: The SFA safety relief valve is dependent on the back pressure (if the back pressure is higher than the atmospheric pressure, the opening pressure will be higher than stated set pressure).

  Special circumstances such as vibrations (which should be avoided) and oscillating pressure may require an increased difference between the operational pressure and the closing pressure.
- Pressure setting
  The operating pressure of the plant should be at least 15% below the set pressure. This allows a perfect re-seating of the safety relief valve after having been activated.
- Temperature range
  –30/+100°C (–22/+212°F)

Code numbers

Certified SFA valves with standard set pressure

Size		Type	Set pressure bar g (psi g)	Code number
mm	in.			
15	½	SFA 15 T 210	10 (145)	148F3210
15	½	SFA 15 T 211	11 (160)	148F3211
15	½	SFA 15 T 212	12 (174)	148F3212
15	½	SFA 15 T 213	13 (189)	148F3213
15	½	SFA 15 T 214	14 (203)	148F3214
15	½	SFA 15 T 215	15 (218)	148F3215
15	½	SFA 15 T 216	16 (232)	148F3216
15	½	SFA 15 T 217	17 (247)	148F3217
15	½	SFA 15 T 218	18 (261)	148F3218
15	½	SFA 15 T 219	19 (276)	148F3219
15	½	SFA 15 T 220	20 (290)	148F3220
15	½	SFA 15 T 221	21 (305)	148F3221
15	½	SFA 15 T 222	22 (319)	148F3222
15	½	SFA 15 T 223	23 (334)	148F3223
15	½	SFA 15 T 224	24 (348)	148F3224
15	½	SFA 15 T 225	25 (363)	148F3225
15	½	SFA 15 T 226	26 (377)	148F3226
15	½	SFA 15 T 227	27 (392)	148F3227
15	½	SFA 15 T 228	28 (406)	148F3228
15	½	SFA 15 T 229	29 (421)	148F3229
15	½	SFA 15 T 230	30 (435)	148F3230
15	½	SFA 15 T 231	31 (450)	148F3231
15	½	SFA 15 T 232	32 (464)	148F3232
15	½	SFA 15 T 233	33 (479)	148F3233
15	½	SFA 15 T 234	34 (493)	148F3234
15	½	SFA 15 T 235	35 (508)	148F3235
15	½	SFA 15 T 236	36 (522)	148F3236
15	½	SFA 15 T 237	37 (537)	148F3237
15	½	SFA 15 T 238	38 (551)	148F3238
15	½	SFA 15 T 239	39 (566)	148F3239
15	½	SFA 15 T 240	40 (580)	148F3240

Certified SFA valves with standard set pressure and TÜV pressure setting certificate with each valve

Size		Type	Set pressure bar g (psi g)	Code number
mm	in.			
15	½	SFA 15 T 310	10 (145)	148F3310
15	½	SFA 15 T 311	11 (160)	148F3311
15	½	SFA 15 T 312	12 (174)	148F3312
15	½	SFA 15 T 313	13 (189)	148F3313
15	½	SFA 15 T 314	14 (203)	148F3314
15	½	SFA 15 T 315	15 (218)	148F3315
15	½	SFA 15 T 316	16 (232)	148F3316
15	½	SFA 15 T 317	17 (247)	148F3317
15	½	SFA 15 T 318	18 (261)	148F3318
15	½	SFA 15 T 319	19 (276)	148F3319
15	½	SFA 15 T 320	20 (290)	148F3320
15	½	SFA 15 T 321	21 (305)	148F3321
15	½	SFA 15 T 322	22 (319)	148F3322
15	½	SFA 15 T 323	23 (334)	148F3323
15	½	SFA 15 T 324	24 (348)	148F3324
15	½	SFA 15 T 325	25 (363)	148F3325
15	½	SFA 15 T 326	26 (377)	148F3326
15	½	SFA 15 T 327	27 (392)	148F3327
15	½	SFA 15 T 328	28 (406)	148F3328
15	½	SFA 15 T 329	29 (421)	148F3329
15	½	SFA 15 T 330	30 (435)	148F3330
15	½	SFA 15 T 331	31 (450)	148F3331
15	½	SFA 15 T 332	32 (464)	148F3332
15	½	SFA 15 T 333	33 (479)	148F3333
15	½	SFA 15 T 334	34 (493)	148F3334
15	½	SFA 15 T 335	35 (508)	148F3335
15	½	SFA 15 T 336	36 (522)	148F3336
15	½	SFA 15 T 337	37 (537)	148F3337
15	½	SFA 15 T 338	38 (551)	148F3338
15	½	SFA 15 T 339	39 (566)	148F3339
15	½	SFA 15 T 340	40 (580)	148F3340

SFV – Safety relief valves

SFV 20-25 are standard, back pressure dependent safety relief valves in angle-way execution, specially designed for protection of vessels and other components against excessive pressure.
The valve is designed to meet the strict quality demands and safety requirements for refrigeration installations, specified by the international classification societies. The inlet flow diameters of the valves are: 18 mm (3/4 in.) for SFV 20, and 23 mm (1 in.) for SFV 25. The valves can be delivered with set pressures between 10 and 25 bar g (145 and 363 psi g).

Advantages and features

- Applicable for the refrigerants R717 (ammonia, NH_3), HFC, HCFC (e.g. R22, R134a, R404A) and other refrigerants (dependent on sealing materials compatibility) within a temperature range of –30°C/+100°C (–22°F/+212°F).

Technical data and code numbers

Technical data

- Refrigerants
  Applicable for the refrigerants R717 (ammonia, NH_3), HFC, HCFC (e.g. R22, R134a, R404A) and other refrigerants dependent on sealing material compatibility within a temperature range of –30°C/+100°C (–22°F/+212°F). Flammable hydrocarbons are not recommended.
- Pressure
  Pressure setting range: 10 - 25 bar g (145 - 363 psi g).

  The valves are designed for:
  Strength test: 43 bar g (624 psi g)
  Leakage safety: Same as set pressure

Important: The SFV safety relief valve is dependent on the back pressure (if the back pressure is higher than the atmospheric pressure, the opening pressure will be higher than stated set pressure).
Special circumstances such as vibrations (which should be avoided) and oscillating pressure may require an increased difference between the operational pressure and the closing pressure.

- Pressure setting
  The operating pressure of the plant should be at least 15% below the set pressure. This allows a perfect re-seating of the safety relief valve after having been activated.
- Temperature range
  –30/+100°C (–22/+212°F)

Code numbers

Certified SFV valves with standard set pressure

Size		Construction and test facilities are approved by TÜV		
mm	in.	Type	bar g (psi g)	Part no.
20	3/4	SFV20 T 210	10 (145)	2416+254
20	3/4	SFV20 T 211	11 (160)	2416+255
20	3/4	SFV20 T 212	12 (174)	2416+256
20	3/4	SFV20 T 213	13 (189)	2416+150
20	3/4	SFV20 T 214	14 (203)	2416+257
20	3/4	SFV20 T 215	15 (218)	2416+258
20	3/4	SFV20 T 216	16 (232)	2416+259
20	3/4	SFV20 T 217	17 (247)	2416+260
20	3/4	SFV20 T 218	18 (261)	2416+151
20	3/4	SFV20 T 219	19 (276)	2416+261
20	3/4	SFV20 T 220	20 (290)	2416+262
20	3/4	SFV20 T 221	21 (305)	2416+152
20	3/4	SFV20 T 222	22 (319)	2416+241
20	3/4	SFV20 T 223	23 (334)	2416+263
20	3/4	SFV20 T 224	24 (348)	2416+264
20	3/4	SFV20 T 225	25 (363)	2416+183

Certified SFV valves with standard set pressure and TÜV pressure setting certificate with each valve

Size		Each valve is certified by a representative from TÜV		
mm	in.	Type	bar g (psi g)	Part no.
20	3/4	SFV20 T 310	10 (145)	2416+285
20	3/4	SFV20 T 311	11 (160)	2416+286
20	3/4	SFV20 T 312	12 (174)	2416+287
20	3/4	SFV20 T 313	13 (189)	2416+160
20	3/4	SFV20 T 314	14 (203)	2416+288
20	3/4	SFV20 T 315	15 (218)	2416+289
20	3/4	SFV20 T 316	16 (232)	2416+290
20	3/4	SFV20 T 317	17 (247)	2416+291
20	3/4	SFV20 T 318	18 (261)	2416+161
20	3/4	SFV20 T 319	19 (276)	2416+292
20	3/4	SFV20 T 320	20 (290)	2416+293
20	3/4	SFV20 T 321	21 (305)	2416+162
20	3/4	SFV20 T 322	22 (319)	2416+294
20	3/4	SFV20 T 323	23 (334)	2416+295
20	3/4	SFV20 T 324	24 (348)	2416+296
20	3/4	SFV20 T 325	25 (363)	2416+186

Certified SFV valves with standard set pressure

Size		Construction and test facilities are approved by TÜV		
mm	in.	Type	bar g (psi g)	Part no.
25	1	SFV25 T 210	10 (145)	2416+265
25	1	SFV25 T 211	11 (160)	2416+266
25	1	SFV25 T 212	12 (174)	2416+267
25	1	SFV25 T 213	13 (189)	2416+153
25	1	SFV25 T 214	14 (203)	2416+268
25	1	SFV25 T 215	15 (218)	2416+269
25	1	SFV25 T 216	16 (232)	2416+270
25	1	SFV25 T 217	17 (247)	2416+271
25	1	SFV25 T 218	18 (261)	2416+154
25	1	SFV25 T 219	19 (276)	2416+272
25	1	SFV25 T 220	20 (290)	2416+273
25	1	SFV25 T 221	21 (305)	2416+155
25	1	SFV25 T 222	22 (319)	2416+242
25	1	SFV25 T 223	23 (334)	2416+274
25	1	SFV25 T 224	24 (348)	2416+275
25	1	SFV25 T 225	25 (363)	2416+184

Certified SFV valves with standard set pressure and TÜV pressure setting certificate with each valve

Size		Each valve is certified by a representative from TÜV		
mm	in.	Type	bar g (psi g)	Part no.
25	1	SFV25 T 310	10 (145)	2416+297
25	1	SFV25 T 311	11 (160)	2416+298
25	1	SFV25 T 312	12 (174)	2416+299
25	1	SFV25 T 313	13 (189)	2416+163
25	1	SFV25 T 314	14 (203)	2416+300
25	1	SFV25 T 315	15 (218)	2416+301
25	1	SFV25 T 316	16 (232)	2416+302
25	1	SFV25 T 317	17 (247)	2416+303
25	1	SFV25 T 318	18 (261)	2416+164
25	1	SFV25 T 319	19 (276)	2416+304
25	1	SFV25 T 320	20 (290)	2416+305
25	1	SFV25 T 321	21 (305)	2416+165
25	1	SFV25 T 322	22 (319)	2416+306
25	1	SFV25 T 323	23 (334)	2416+307
25	1	SFV25 T 324	24 (348)	2416+308
25	1	SFV25 T 325	25 (363)	2416+187

DSV – Double stop valves

DSV 1 and DSV 2 are 3-way valves, which are designed to meet all industrial refrigeration application requirements. They are designed specifically for use with double safety valve systems.
The valves are designed to give favourable flow characteristics and are easy to dismantle for servicing. The valve cone is designed to ensure perfect closing, even with minimum torque the valve will close effectively.

Advantages and features

- Applicable to all common non flammable refrigerants including R717 and non corrosive gases/liquids dependent on sealing material compatibility.
- Each valve type is clearly marked with type, size and performance range.
- The valves and caps are prepared for sealing, to prevent operation by unauthorised persons, using a seal wire.
- Can accept flow in both directions.
- Housing and bonnet are made from low temperature steel according to requirements of the Pressure Equipment Directive and other international classification authorities.

- Max. operating pressure:
  DSV 1 and DSV 2: 40 bar g (580 psi g)
- Temperature range:
  DSV 1 and DSV 2: -50/+100°C (-58/+212°F)
- **DSV 1** when fitted with 2 × SFA 15 or
  DSV 2 when fitted with a combination of either 2 × SFA 15, or 2 × SFV 20, or 2 × FV 25, meet the requirements according to EN13136 "Safety Valves Calculations" regarding max. 3% pressure drop in upstream line.

Technical data and code numbers

Technical data

- Refrigerants
  Applicable to all common non-flammable refrigerants, including R717 and non corrosive gases/liquids, dependent on sealing material compatability. Flammable hydrocarbons are not recommended. The valve is only recommended for use in closed circuits.
  - Temperature range
    –50/+100°C (–58/+212°F).
- Pressure
  The valves are designed for:
  Max. operating pressure: 40 bar g (580 psig)
  Valves for higher design pressure are available on request.
- Capacity

Type	K_v-value	C_v-value
	m^3/h	Usgal/min
DSV 1	17.5	20.3
DSV 2	30.0	34.8

- Installation
  DSV are used as changeover valves between two SFA/SFV safety valves. When the spindle is turned clockwise (fig. 1) the inlet port C is connected to B. When the spindle is turned anticlockwise (fig. 1) the inlet port C is connected to A. For further information refer to installation instruction for DSV.

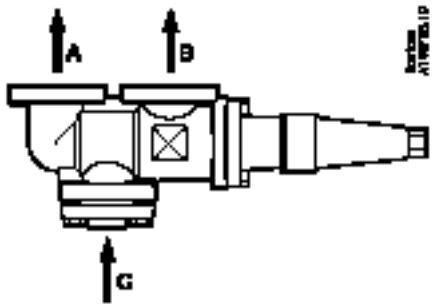

Code numbers

Please note that the type codes only serve to identify the valves, some of which may not form part of the standard product range.

Type codes

Valve type		DSV inlet connection	DSV outlet connection	SFV outlet connection	Safety valve combination	Code no.
DSV	1	D25 (1 in.)	G ¾" Union	ND20 (¾ in.)	SFA15	148F3005
DSV	2	FD20 (¾ in.)	G ¾" thread flange	ND20 (¾ in.)	SFA15	148F3006
DSV	2	FD25 (1 in.)	G ¾" thread flange	ND20 (¾ in.)	SFA15	148F3007
DSV	2	FD32 (1¼ in.)	G ¾" thread flange	ND20 (¾ in.)	SFA15	148F3008
DSV	2	FD25 (1 in.)	G 1¼" thread flange	FD25 (1 in.)	SFV20	148F3009
DSV	2	FD32 (1¼ in.)	G 1¼" thread flange	FD25 (1 in.)	SFV20	148F3010
DSV	2	FD32 (1¼ in.)	G 1¼" thread flange	FD32 (1¼ in.)	SFV25	148F3011
Connection fittings:	D	Weld branches DIN 2448		DSV valves are supplied c/w DSV inlet connection fittings, DSV outlet connection fittings, and SFA/SFV outlet connection fittings.		
	ND	Weld nipples DIN 2448				
	FD	Weld flanges DIN 2448				

Important!
Where products need to be certified according to specific certification societies or where higher pressures are required, the relevant information should be included at the time of order.

QDV – Quick closing oil drain valves

QDV is a quick closing oil drain valve, designed particularly for draining oil from systems containing refrigerant (ammonia) under pressure.

The valve will close immediately on release of the handle, thus protecting user and environment against unnecessary refrigerant leaks.

Advantages and features

- QDV is generaly used with R717 (ammonia) but the valve is also applicable to all other common non flammable refrigerants and non corrosive gases/liquids dependent on sealing material compatibility
- Meets the safety demands within industrial refrigeration
- Handle can be positioned 360°
- Built-in integral relief device opening over 25 bar g (proventing hydraulic pressure building up between stop valve and QDV).
- Can be supplied together with a stop valve for quick on site mounting
- Max. operating pressure: 40 bar g (580 psi g).
- Temperature range: –50/+150°C (–58/+302°F).

Technical data and code numbers

Technical data

- Refrigerants
  QDV is generally used with R717 (ammonia) but the valve is also applicable to all other common non flammable refrigerants and non corrosive gases/liquids dependent on sealing material compatibility.
- QDV is a backpressure dependent valve. If any tube or hose is mounted on the outlet of the QDV it has to be calculated to prevent blackpressure building up when relieving.
- For further information please see installation instruction for QDV.
  Flammable hydrocarbons are not recommended.
- Temperature range
  –50/+150°C (–58/+302°F).
- Pressure
  The valve is designed for:
  Maximum operating pressure of 40 bar g
  (580 psi g)

Code numbers

How to order
The table below is used to identify the valve required.

Type	Inlet	Outlet	Code no.
QDV 15 DN 15	DN 15	G ¾ in.	148H3272
QDV 15 ½ in. FPT	½ in. FPT	½ in. FPT	148H3273
QDV 15 ¾ in. FPT	¾ in. FPT	¾ in. FPT	148H3274
QDV 15 DN 15 + SVA-ST DN 15 H-WHEEL*	DN 15	G ¾ in.	148H3310
QDV 15 ½ in. FPT + SVA-ST SOC ½ in. H-WHEEL*	½ in. SOC	½ in. FPT	148H3311
Fittings for hose connection - G ¾"			148H3451
Fittings for welding connection - G ¾"			148H3452

* Two valves are supplied in one box and should be mounted on site.
The indicated inlet is for the stop valve - The indicated outlet is for the oil drain valve.

Important!
Where products need to be certified according to specific certification societies or where higher pressures are required, the relevant information should be included at the time of order.

LLG – Liquid level glasses

LLG are liquid level glasses made of ductile steel which meets the strictest requirements on industrial and marine refrigeration installations
LLG has sufficient flow areas to secure the highest possible degree of synchronous operation, and have a specially hardened reflection glass for quick reading. The LLG are delivered with stop valves, which ensures easy insulation on site as well as easy inspection and service, if any.

Advantages and features

- All LLG liquid level glasses are equipped as standard with a built-in safety system (non return device). If a glass is damaged, the pressure of the refrigerant will activate the safety system and refrigerant loss will be limited to an absolute minimum.
- Refrigerants
  Applicable to all common non flammable refrigerants including R717 and non corrosive gases/liquids dependent on sealing material compatibility.
- Temperature range
  –10/+100 °C or –50/+30 °C
- Maximum operating pressure: 25 bar g
  Equipped with boron-silicate glass, hardened by an accurately controlled heat treatment process.

- The range of liquid level glasses is based on 3 basic liquid level glasses: LLG 185, LLG 335 and LLG 740. The other standard lengths are combined by using variations of basic glass lengths.
- The liquid level glasses are offered in 4 different versions:
  - with welding nipples (LLG).
  - with stop valves equipped with caps (LLG S).
  - with sight adapter in acrylic glass ready for insulation on site (LLG F).
  - with stop valves and sight adapter in acrylic glass ready for insulation on site (LLG SF).

NOTE:
The LLG liquid level glass can only be placed in CE approved applications with the stop valves in front i.e. LLG S or LLG SF.

Technical data and code numbers

Technical data

	LLG
Refrigerants	The liquid level glasses are applicable to all common non flammable refrigerants including R717 and non corrosive gases/liquids. Flammable hydrocarbons are not recommended.
Temperatur range	LLG S: –10/+100 °C LLG SF: –50/+30 °C
Pressure range **Max. operating pressure**	25 bar g
Pressure range Strength test	50 bar g
Pressure range Leakage test	at 25 bar g

Code numbers

Liquid level glasses - LLG S *With safety system and stop valves (SNV-ST)*

Length		Type	Code no.
mm	in.		
185	7¼	LLG 185 S	2512+056
335	13¼	LLG 335 S	2512+057
590	23¼	LLG 590 S	2512+058
740	29¼	LLG 740 S	2512+059
995	39¼	LLG 995 S	2512+060
1145	45	LLG 1145 S	2512+061
1550	61	LLG 1550 S	2512+062

Liquid level glasses for insulating - LLG SF *With safety system, stop valves (SNV-ST) and sight adapter*

Length		Type	Code no.
mm	in.		
185	7¼	LLG 185 SF	2512+066
335	13¼	LLG 335 SF	2512+067
590	23¼	LLG 590 SF	2512+068
740	29¼	LLG 740 SF	2512+069
995	39¼	LLG 995 SF	2512+070
1145	45	LLG 1145 SF	2512+071
1550	61	LLG 1550 SF	2512+072

Important!
Where products need to be certified according to specific certification societies or where higher pressures are required, the relevant information should be included at the time of order.

GD – Gas Detectors

Danfoss Gas Detectors, type GD are a range of products designed to meet all industrial refrigeration and air conditioning application requirements.
GD detects a wide range of commonly used refrigerants including Ammonia, Carbon Dioxide, Halo-Carbons and Hydro-Carbons.

Advantages and features

- GD is specifically developed for refrigeration applications
- Interchangeable precalibrated sensors
- Optional models: LCD display, IP65 enclosure, EExd (Explosion Protected)
- Can operate as stand alone product
- Linear analog outputs, current (mA)/volt (V) proportional to the gas concentration
- Two digital outputs. Low Level and High Level Alarm
- Adjustable setting for alarm levels and output contacts with optional NO or NC switches
- Manual or automatic alarm reset optional
- Alarm levels can be set locally.
- GD can be connected directly to a Danfoss monitoring unit system
- Available with a range of different sensor technologies to monitor industrial refrigeration gases:
  - Electro-Chemical
  - Semi-Conductor
  - Catalytic
  - Infra-Red

Technical data and code numbers

Technical data

Refrigerants	**Ammonia (R 717)** Type GDA: 0-100 ppm, 0-300 ppm, 0-1,000 ppm, 0-10,000 ppm, 0-30,000 ppm
	Carbon Dioxide (R 744) Type GDC: 0-10,000 ppm, 0-20,000 ppm, 0-40,000 ppm
	Halo-Carbon - HCFC (R 22, R 123) Type GDHC: 0-1,000 ppm
	HFC (R 404A, R410A, R134a, R 407C, R 507) Type GDHF: 0-1,000 ppm
	Hydro-carbon - Propane (R 290), R 600, R 600a, R 1270 Type GDH: 0-5,000 ppm
Versions/temperature range	Standard, LCD display, IP65 and EExd: –20 °C/+50 °C Low temperature model: –40 °C/+50 °C
Cable connection	1 gland for 6-13 mm cable (0.2"-0.5") 1 Ø 20 mm (0.8") hole with blanking plug. 1 extra gland can be fitted (only Standard, LCD display and EExd).
Approvals	**CE:** EN55011: 1998, EN61326: 1996 Following the provisions of 89/336/EEC, EMC directives and, Cenelec EN61010-2 : 2001 Following the provisions of 73/23/EEC, Low Voltage directive (LVD) **ATEX for EExd model:** Directive 94/9/EC Group 2, Category2, G and D, Zones 1 and 2.

Code numbers

Type of gas	All models		Standard	With LCD display	EExd	IP56 Low Temp.	EExd Low. Temp.	IP66 with remote IP65 sensor	IP66 with remote IP65 EExd sensor	IP56
	Danfoss Type	Range [PPM]	Code no.							
Ammonia - NH_3										
R 717	GDA EC 100	0-100	148H5000	148H5001	148H5003	148H5005	148H5006			148H5009
	GDA EC 300	0-300			148H5063					
	GDA EC 1000	0-1000	148H5010	148H5011	148H5013	148H5015	148H5016			148H5019
	GDA EC 1000	0-1000	148H5050	148H5051	148H5053	148H5055				148H5059
	GDA SC 1000	0-1000	148H5040							148H5049
	GDA SC 10000	0-10000	148H5020	148H5021	148H5023	148H5025	148H5026	148H5027	148H5028	148H5029
	GDA CT 30000	0-30000	148H5030	148H5031	148H5033	148H5035				148H5039
Carbon Dioxide - CO_2										
R 744	GDC IR 10000	0-10000	148H5070	148H5071	148H5073	148H5075				148H5072
	GDC IR 20000	0-20000				148H5085				148H5082
	GDC IR 40000	0-40000								148H5092
Halo-Carbon										
HCFC (R 22, R 123)	GDHC SC 1000	0-1000	148H5100	148H5101		148H5105		148H5107		148H5109
HFC (R 404A, R 410A, R 134a, R 407C, R 507)	GDHF SC 1000	0-1000	148H5110	148H5111		148H5115		148H5117		148H5119
HFC (R 134a)	GDHF-R3 SC 1000	0-1000	148H5120	148H5121		148H5125		148H5127		148H5129

EC = Electro-chemical, SC = Semi-cheminal, CT = Catalytic, IR = Infrared

Accessories

Description	Code no.
GD Test Kit - GD Tester all models. To test mother PCB at Sensor PCB replacement - Beaker M42 - EC/SC/CT-Adapter. Fit Beaker M42 - M35 Adapter. Fit Beaker M42	148H5230
GD Repeater all models. Between GD and Danfoss Monitoring System	148H5231
GD mother PCB all models	148H5232
GD Ampoules 10 pcs. 100 ppm ammonia.	148H5234
GD Ampoules 10 pcs. 1000 ppm ammonia.	148H5235
GD Ampoules 10 pcs 2000 ppm CO_2	148H5236
Remote LCD display IP41	148H5238

DGS – Gas sensors

DGS helps to comply to environmental F-Gas Regulations and/or Health & Safety requirements, on new or existing systems in:

- Supermarkets
- Process refrigeration plants
- Refrigerated storage and warehousing
- Special applications areas/zones

Functions

- Utilising either Semi-Conductor (SC) or Infrared (IR) technologies
- DGS gives quick and immediate response in detecting a wide range of different gases typically applied in Refrigeration & Air Conditioning systems.
- DGS sensors can be used in stand-alone or integrated systems, where continuous real-time, automatic monitoring with Danfoss ADAP-KOOL® Refrigeration Control & Monitoring System and/or Building Management Systems is applied.

Advantages

Typical Refrigerant gas applications include:

- Halocarbons: HFC's, HCFC's, CFCs.
- Carbon Dioxide (CO_2 / R744)
- Hydrocarbons (e.g. R290, R600a)
- Other special application gases to customer request

Technical data and ordering

Power Supply	12/24 V AC/DC ±20%
Power Consumption	EC: 60 mA / SC:153 mA / IR: 136 mA
Power Monitoring	Green LED indication
Visual Alarm	RED LED indication
Audible Alarm	Sounder, enabled/disabled
Fault Monitoring	Red LED ON ~ Green LED OFF
Fault State	0 - 0.5 V (1-5 V), 0 - 1 V(2-10 V), 0 - 2 mA (4-20 mA)
Analogue Outputs	0-5 V, 1-5 V, 0-10 V, 2-10 V, 4-20 mA
Digital Outputs	1-Relay
	1-Amp / 24 V D.C. / 120 V A.C.
	Selectable Delay: 0, 1 min., 5 min., 10 min.
IP Enclosure rating	IP41 or IP66
Standard Compliance	WEEE RoHS EuP

Sensor Information		Semi-Conductor with filter (multigas) SC Halocarbons	Semi-Conductor (multigas) SC Hydrocarbons	Infrared IR CO_2
Typical Measurement Range		0 - 1,000 ppm	0 - 1,000 ppm	0 - 10,000 ppm 0 - 20,000 ppm 0 - 50,000 ppm
Relay Factory Default Setting		50% of Range	50% of Range	50% of Range
Temperature Range	IP41	-20°C to +50°C (-4°F to 122°F)	20°C to +50°C (-4°F to 122°F)	20°C to +50°C (-4°F to 122°F)
	IP66	-40°C to +50°C (-40°F to +122°F)	-40°C to +50°C (-40°F to +122°F)	-40°C to +50°C (-40°F to +122°F)
Humidity Range non-condensing		0 to 95%	0 to 95%	0 to 95%
Typical sensor life Alarm threshold Recovery time	 T50 T90	5-years 76 sec (filtered) 215 sec (filtered) 600 sec	5-years 50 sec (filtered) 90 sec (filtered) 200 sec	5-years 50 sec 120 sec 235 sec
Linearity		Linear over calibrated range		
Calibration requirements		• Standards generally require annual test and calibration • See Danfoss Manual for Instructions • Note: Semi-Conductor sensors are non-selective, but calibrated to a specfic gas.		

Danfoss DGS - IP41 Enclosure Versions			
		Product Description	**Code no.**
	R404A, R507	DGS-SC Gas Detector (IP41) Std. default R404A/R507 (min. -20°C)	080Z2098
	R134a	DGS-SC Gas Detector (IP41) std. default R134a (min. -20°C)	080Z2092
	R407A	DGS-SC Gas Detector (IP41) std. default R407A (min. -20°C)	080Z2093
	R410	DGS-SC Gas Detector (IP41) std. default R410 (min. -20°C)	Contact Danfoss
	CO_2 (R744)	DGS-IR-CO_2 Gas Detector (IP41) for CO_2 std. (min.-20°C)	080Z2095

Danfoss DGS IP66 enclosure versions can be delivered on request.

Electronic controls – overview

Type		Code Nr.	Relay / temperature sensor	Defrost heating	Cooling or heating function	Rail heat	Fan	Alarm / light / misc. (choosable)	2nd compressor	DI / DO/ AI / AO	Batterie for clock (optional)	HACCP via system / HACCP integrated	Application modul	Definition and waiting of thermostat sensors	Defrost / defrost on demand/ defrost on demand via bus	Voltage 230 V	Voltage 115 V	Voltage 24 V
Case controller																		
EKC 102A		084B8500	1/1		x					-/x/-/-						x		
EKC 102A		084B8503	1/1		x					-/x/-/-							x	
EKC 102B		084B8501	2/2					x/-/-	x	-/x/-/-					x/-/-	x		
EKC 102C		084B8502	2/2	x				x/-/-		-/x/-/-					x/-/-	x		
EKC 102C		084B8505	2/2	x				x/-/-		-/x/-/-					x/-/-		x	
EKC 102D		084B8506	3/2	x			x	x/-/-		x/x/-/-						x		
EKC 202A		084B8521	3/2	x				x/-/-		x/x/-/-	x	x/-			x/-/x	x		
EKC 202B		084B8522	4/2	x			x	x/-/-		x/x/-/-	x	x/-			x/-/x	x		
EKC 202C		084B8523	4/2	x			x	x/x/-		x/x/-/-	x	x/-			x/-/x	x		
EKC 202C-MS		084B8543	4/2	x			x	x/x/-		x/x/-/-	x	-/-			x/-/x	x		
EKC 302A		084B4162	2/2					x/-/-		x/x/-/-		x/-			x/-/x	x		
EKC 302B		084B4163	3/2	x			x			x/x/-/-		x/-			x/-/x	x		
EKC 302D		084B4164	4/3	x		x	x	x/x/x		x/x/-/-		x/-	x		x/-/x	x		
AK-CC 210		084B8520	4/3	x		x	x	x/x/x	x	x/x/-/-	x	x/x	x	x	x/x/x	x		
AK-CC 250A		084B8528	4/3	x		x	x	x/x/x	x	x/x/-/-	x	x/x	x	x	x/x/x	x		
AK-CC 250B		084B8529	4/3	x		x	x	x/x/x	x	x/x/-/-	x	-/-	x	x	x/x/x	x		
AK-CC 350		084B4165	4/3	x		x	x	x/x/x	x	x/x/-/-		x/x	x	x	x/x/x	x		
AK-CC 450		084B8022	6/5	x		x	x	x/x/x		x/x/-/-		x/x	x	x	x/x/x	x		
AK-CC 550A		084B8030	6/5	x		x	x	x/x/x		x/x/-/-		x/-	x	x	x/x/x	x		
AK-CC 750		080Z0121	9/5	x		x	x	x/x/x		x/x/x/x		x/-	x	x	x/x/x	x		x
AK-CC 750		080Z0122	9/5	x		x	x	x/x/x		x/x/x/x		x/-	x	x	x/x/x	x		x
AK-CC 750		080Z0125	9/5	x		x	x	x/x/x		x/x/x/x		x/-	x	x	x/x/x	x		x
Superheat Controller																		
EKC 315A		084B7086	2/2					x/-/-										x
EKC 312		084B7250	1/2					x/-/-										x
EKC 316A		084B7079	2/2					x/-/-										x
EKD 316		084B8040	1/2					x/-/-										x
Temperature Controller																		
EKC 368		084B7079	4/2	x			x	x/-/-										
Liquid level Controller																		
EKC 347		084B7067																
Capacity Controller																		
EKC 331T		084B7105	5/2					x/-/-	2x	x/x/-/-						x		
AK-PC 530		084B8007	10/2				4x	x/-/-	2x	x/x/-/-								x
AK-PC 781		080Z0186	8/11				8x			x/x/x/x								x
		080Z0187	8/11				8x			x/x/x/x								x
		080Z0188	8/11				8x			x/x/x/x								x
Condensing unit Controller																		
AK-RC 101		080Z3200	Single-phase															
AK-RC 103		080Z3201	Three-phase (3 kW), 4.5-6.3 A															
		080Z3202	Three-phase (3 kW), 7-10 A															
		080Z3206	Three-phase (5 kW), 11-16 A															
		080Z3207	Three-phase (5 kW), 14-20 A															

			With screw terminals	With plug connection	Valve control	Room thermostat	UPS connection	Pressure controls	0-10 V / 4-20 mA Input	0-10 V / 4-20 mA Output	Superheat regulation	Reference displacement	External display	Data communication opt. / on board	Note / Language
Case controller															
EKC 102A		084B8500			TEV	x									
EKC 102A		084B8503			TEV	x									
EKC 102B		084B8501			TEV	x						x			
EKC 102C		084B8502			TEV	x						x			
EKC 102C		084B8505			TEV	x						x			
EKC 102D		084B8506			TEV	x						x			
EKC 202A		084B8521			TEV	x						x		x/-	
EKC 202B		084B8522			TEV	x						x		x/-	
EKC 202C		084B8523			TEV	x						x		x/-	
EKC 202C-MS		084B8543			TEV	x						x		x/-	NTC
EKC 302A		084B4162		x	TEV	x								x/+	
EKC 302B		084B4163		x	TEV	x								x/+	
EKC 302D		084B4164		x	TEV	x								x/+	
AK-CC 210		084B8520			TEV	x						x		x/-	
AK-CC 250A		084B8528			TEV	x						x		-/x	
AK-CC 250B		084B8529			TEV	x						x		-/x	NTC
AK-CC 350		084B4165		x	TEV	x						x		+/+	
AK-CC 450		084B8022	x		TEV	x							x	+/+	
AK-CC 550A		084B8030	x		AKV	x					x		x	+/+	
AK-CC 750		080Z0121		x	4x AKV	x					x		x	-/x	EN, DE, FR, IT, NL
AK-CC 750		080Z0122		x	4x AKV	x					x		x	-/x	EN, ES, PT
AK-CC 750		080Z0125		x	4x AKV	x					x		x	-/x	EN, DK, SW, FI
Superheat Controller															
EKC 315A		084B7086	x		AKV/ICM	x	x	x	-/x	-/x	x	x		x/-	
EKC 312		084B7250	x		ETS			x	-/-	-/-	x			x/-	
EKC 316A		084B7079	x		ETS	x	x	x	-/x	-/x	x	x		x/-	
EKD 316		084B8040	x		ETS		x	x	x/x	-/-	x			x/-	
Temperature Controller															
EKC 368		084B7079	x		KVS		x		x/-			x		x/-	
Liquid level Controller															
EKC 347		084B7067	x											x/-	
Capacity Controller															
EKC 331T		084B7105	x					x	x/x	x/x		x		x/-	
AK-PC 530		084B8007		x				x	x/x	x/x		x	x	x/-	
AK-PC 781		080Z0186		x											EN, DE, FR, IT, NL
		080Z0187		x											EN, ES, PT
		080Z0188		x											EN, DK, FI
Condensing unit Controller															
AK-RC 101		080Z3200	Single-phase												
AK-RC 103		080Z3201	Three-phase (3 kW), 4.5-6.3 A												
		080Z3202	Three-phase (3 kW), 7-10 A												
		080Z3206	Three-phase (5 kW), 11-16 A												
		080Z3207	Three-phase (5 kW), 14-20 A												

EKC 102 – Temperature controller

EKC 102 controllers for panel mounting are used for temperature and defrost control via pump-down or start/stop of compressor.

Functions

Thermostat

- ON/OFF thermostat
- Sensors: Danfoss Pt1000, PTC1000 or NTC5000
- Calibration of sensors
- Day/night control
- Alarm thermostat with delays

Defrost

- Electrical or natural defrost
- Start via DI input, time interval or display
- Defrost on demand
- Stop on time or temperature

Compressor

- Anti cycle timers for optimum compressor protection
- High-effect 16A relays for connection of compressors without use of intermediate relay
- Control of 2 compressors (version 102B)

Multipurpose DI input

- Multipurpose DI input for defrost start, day/night control, dooralarm or main switch

Other functions

- The S5 sensor can be used for monitoring of condenser temperature or as product sensor (version 102B+102D)
- Door function with alarm monitoring
- Manual control of outputs
- Delay of outputs at power up

Display & Programming

- High-efficient LED display with icons for indication of operational status. Parameter settings/readouts and alarm conditions can be read on the display.
- "Copy key" programming key with room for 25 different controller setups

Fan (102D only)

- Fan delay during defrost
- Fan stop when compressor cuts out
- Fan stop at high S5 temperature

Advantages

- Integrated refrigeration-technical functions
- Defrost on demand in 1:1 systems
- Buttons and seal imbedded in the front
- IP65 density from the front panel
- Can control two compressors
- Digital input for either:
  - Door alarm
  - Defrost start
  - Start/stop of regulation
  - Night operation
  - Change-over between two temperature reference
  - Case cleaning function
- Instant programming via programming key
- HACCP

  Factory calibration that will guarantee a better measuring accuracy than stated in the standard EN 441-13 without subsequent calibration (Pt 1000 ohm sensor)

Technical data and ordering

Technical data

Supply voltage	230 V a.c.(115 V) +10/-15 %. 1.5 VA		
Sensors	Pt 1000 or PTC (1000 ohm/25 °C) or NTC-M2020 (5000 ohm/25 °C)		
Accuracy	Measuring range	-60 to +99 °C	
	Controller	±1 K below -35 °C ±0.5 K between -35 to +25 °C ±1 K above +25 °C	
	Pt 1000 sensor	±0.3 K at 0 °C ±0.005 K per grad	
Display	LED, 3 digits		
Digital inputs	Signal from contact functions Requirements to contacts: Gold plating Cable length must be max. 15 m Use auxiliary relays when the cable is longer		
Electrical connection cable	Max.1.5 mm² multi-core cable on supply and relays. Max. 1 mm² on sensors - and DI inputs. Terminals are mounted on the circuit board		
Relays*		CE (250 V a.c.)	UL ** (240 V a.c.)
	DO1. Refrigeration	10 (6) A	10 A Resistive 5FLA, 30LRA
	DO2. Alarm/ Defrost/ Refrigeration	10 (6) A	10 A Resistive 5FLA, 30LRA
	DO3. Fan	6 (3) A	6 A Resistive 3FLA, 18LRA 131 VA Pilot duty
Environments	0 to +55 °C, During operations -40 to +70 °C, During transport		
	20 - 80% Rh, not condensed		
	No shock influence/vibrations		
Enclosure	IP65 from front. Buttons and packing are imbedded in the front.		
Approvals	EU Low Voltage Directive and EMC demands re CE-marking complied with LVD tested acc. EN 60730-1 og EN 60730-2-9, A1, A2 EMC tested acc. EN50082-1 og EN 60730-2-9, A2		

* DO1 and DO2 are 16 A relays. DO3 is a 8 A relay. Max. load must be keept.
** UL-approval based on 30000 couplings

Ordering

Type	Description	Supply	Code no.
EKC 102A	Temperature controller	230 V a.c.	084B8500
		115 V a.c.	084B8503
EKC 102B	Temperature controller with alarm function	230 V a.c.	084B8501
EKC 102C	Temperature controller for electric defrost	230 V a.c.	084B8502
		115 V a.c.	084B8505
EKC 102D	Controller for refrigeration with fan function	230 V a.c.	084B8506

Accessories

EKA 182A	Copy key EKC - EKC		084B8567
AKS 12	Pt 1000 Sensor	1.5 m	084N0036
EKS 111	PTC 1000 Sensor	1.5 m	084N1178
EKS 211	NTC 5000 Sensor	1.5 m	084N1220

EKC 202 – Refrigeration controller

The series of EKC 202 controllers can be used for a wide range of different refrigeration applications – from control of air temperatures and defrost to more advanced applications, including control of light and fans.

Functions

Thermostat

- ON/OFF heating or cooling thermostat
- Sensors: Danfoss Pt1000, PTC1000 or NTC
- Day/night control
- Thermostat band
- Alarm thermostat with delay

Defrost

- Electrical, natural or hot gas defrost
- Start via DI input, time interval or schedule (RTC)
- Defrost on demand
- Stop on time or temperature
- Coordinated defrost

Compressor

- Anti cycle timers for optimum protection
- High-effect 16A relays for connection of compressors without use of intermediate relays

DI input

- Multi purpose DI input for defrost start, door function, night setback, main switch, appliance cleaning, general alarm, defrost coordination and thermostat band.

Fan

- Fan delay during defrost
- Fan stop when compressor cuts out
- Fan stop at high S5 temperature

Light control

- Light control of day/night, door, or via network

Advantages

- Integrated refrigeration-technical functions
- Defrost on demand in 1:1 systems
- Buttons and seal imbedded in the front
- IP65 density from the front panel
- Digital input for either:
  - Door contact function with alarm
  - Defrost start
  - Start/stop of regulation
  - Night operation
  - Change-over between two temperature reference
  - Case cleaning function
- Instant programming via programming key
- HACCP

  Factory calibration that will guarantee a better measuring accuracy than stated in the standard EN 441-13 without subsequent calibration (Pt 1000 ohm sensor)

Technical data and ordering

Technical data

Supply voltage	230 V a.c. +10/-15 %. 1.5 VA		
Sensors for EKC 202A, 202B, 202C	Pt 1000 ohm (0 °C) PTC 1000 ohm (25 °C) or NTC 5000 ohm (25°C) M 2020		
Sensors for EKC 202C-MS	NTC 2000 ohm (25 °C) NTC 2500 ohm (0 °C) NTC 3000 ohm (25 °C) NTC 5000 ohm (25 °C) M 2020 NTC 10000 ohm (25 °C) NTC 10000 ohm (25 °C) Beta 3435		
Accuracy	Measuring range	-60 to +99 °C	
	Controller	±1 K below -35 °C ±0,5 K between -35 to +25 °C ±1 K above +25 °C	
	Pt 1000 sensor	±0.3 K at 0 °C ±0.005 K per grad	
Display	LED, 3 digits		
Digital inputs	Signal from contact functions Requirements to contacts: Gold plating Cable length must be max. 15 m Use auxiliary relays when the cable is longer		
Electrical connection cable	Max.1,5 mm² multi-core cable on supply and relays. Power current terminals are mounted on the circuit board. Max. 1 mm² on sensors - and DI inputs.		
Relays*		CE (250 V a.c.)	UL *** (240 V a.c.)
	DO1. Refrigeration	10 (6) A	10 A Resistive 5FLA, 30LRA
	DO2. Defrost	10 (6) A	10 A Resistive 5FLA, 30LRA
	DO3. Fan	6 (3) A	6 A Resistive 3FLA, 18LRA 131 VA Pilot duty
	DO4. Alarm or light	4 (1) A Min. 100 mA**	4 A Resistive 131 VA Pilot duty
Environments	0 to +55 °C, During operations -40 to +70 °C, During transport		
	20 - 80% Rh, not condensed		
	No shock influence/vibrations		
Enclosure	IP65 from front. Buttons and packing are imbedded in the front.		
Escapement reserve for the clock	4 hours		
Approvals	EU Low Voltage Directive and EMC demands re CE-marking complied with LVD tested acc. EN 60730-1 og EN 60730-2-9, A1, A2 EMC tested acc. EN50082-1 og EN 60730-2-9, A2		

* DO1 and DO2 are 16 A relays. DO3 and DO4 are 8 A relays. Max. load must be keept.
** Gold plating ensures make function with small contact loads
*** UL-approval based on 30000 couplings

Ordering

Type	Description		Code no.
EKC 202A	Refrigeration controller		084B8521
EKC 202B	Refrigeration controller with fan function		084B8522
EKC 202C	Refrigeration controller for electric defrost		084B8523
EKC 202C-MS	Refrigeration controller multi sensor (only NTC)		084B8543
Accessories			
EKA 178A	Data communication module MODBUS		084B8564
EKA 179A	RS485 LON		084B8565
EKA 181A	Battery & Buzzer		084B8566
EKA 181C	Battery module that will protect the clock in case of lengthy power failure		084B8577
EKA 182A	Copy key EKC - EKC		084B8567
EKA 183A	Programming key EKC		084B8582
AKS 12	Pt 1000 Sensor	1.5 m	084N0036
EKS 111	PTC 1000 Sensor	1.5 m	084N1178
EKS 211	NTC 5000 Sensor	1.5 m	084N1220
EKS 221	NTC 10000 Beta 3435 Sensor	3.5 m	084N3206

EKC 302 – Refrigeration controller

The series of EKC 302 controllers can be used for a wide range of different refrigeration applications – from control of air temperatures and defrost to more advanced applications, including control of light and fans.
For DIN rail mounting.

Functions

Thermostat

- ON/OFF heating or cooling thermostat
- Sensors: Danfoss Pt1000, PTC1000 or NTC
- Day/night control
- Thermostat band
- Alarm thermostat with delay

Defrost

- Electrical, natural or hot gas defrost
- Start via DI input, time interval or schedule (RTC)
- Defrost on demand
- Stop on time or temperature
- Coordinated defrost

Compressor

- Anti cycle timers for optimum protection
- High-effect 16A relays for connection of compressors without use of intermediate relays

DI input

- Multi purpose DI input for defrost start, door function, night setback, main switch, appliance cleaning, general alarm, defrost coordination and thermostat band.

Fan

- Fan delay during defrost
- Fan stop when compressor cuts out
- Fan stop at high S5 temperature

Light control

- Light control of day/night, door, or via network

Advantages

- Integrated refrigeration-technical functions
- Defrost on demand in 1:1 systems
- Buttons and seal imbedded in the front
- Digital input for either:
  - Door contact function with alarm
  - Defrost start
  - Start/stop of regulation
  - Night operation
  - Change-over between two temperature reference
  - Case cleaning function
- Fixed MODBUS data communication
- Instant programming via programming key
- HACCP
  Factory calibration that will guarantee a better measuring accuracy than stated in the standard EN 441-13 without subsequent calibration (Pt 1000 ohm sensor)
- AKC 302D: Several applications in the same unit.

Technical data and ordering

Technical data

Supply voltage	230 V a.c. +10/-15 %. 1.5 VA		
Sensors for EKC 302	Pt 1000 ohm (0 °C) PTC 1000 ohm (25 °C) or NTC 5000 ohm (25°C) M 2020		
Accuracy	Measuring range	-60 to +99 °C	
	Controller	±1 K below -35 °C ±0,5 K between -35 to +25 °C ±1 K above +25 °C	
	Pt 1000 sensor	±0.3 K at 0 °C ±0.005 K per grad	
Display	LED, 3 digits		
Digital inputs	Signal from contact functions Requirements to contacts: Gold plating Cable length must be max. 15 m Use auxiliary relays when the cable is longer		
Electrical connection cable	Max.1,5 mm² multi-core cable on supply and relays. Power current terminals are mounted on the circuit board. Max. 1 mm² on sensors - and DI inputs.		
Relays*		IEC 60 730	
	DO1. Refrigeration	10 (6) A & (5 FLA, 30 LRA)	1)
		16 (8) A & (10 FLA, 60 LRA)	2)
	DO2. Defrost	6 (3) A & (3 FLA, 18 LRA)	1)
		10 (6) A & (3 FLA, 30 LRA)	2)
	DO3. Fan	6 (3) A & (3FLA, 18 LRA)	1)
		10 (6) A & (5 FLA, 30 LRA)	2)
	DO4. Alarm	4 (1) A Min. 100 mA**	
Environments	0 to +55 °C, During operations -40 to +70 °C, During transport		
	20 - 80% Rh, not condensed		
	No shock influence/vibrations		
Enclosure	IP 20		
Escapement reserve for the clock	4 hours		
Approvals	EU Low Voltage Directive and EMC demands re CE-marking complied with LVD tested acc. EN 60730-1 og EN 60730-2-9, A1, A2 EMC tested acc. EN50082-1 og EN 60730-2-9, A2		

* DO1 is a 20 A relay. DO2 and DO3 are 16 A relays. DO4 is a 10 A relay. The max. load listed above must be observed when connecting without zero-crossing control. When connecting with zero-crossing, the load must be increased to the value indicated by 2).

** Gold plating ensures make function with small contact loads.

Ordering

Type	Description		Code no.
EKC 302A	Refrigeration controller		084B4162
EKC 302B	Refrigeration controller with fan and defrost function		084B4163
EKC 302D	Refrigeration controller with fan and defrost function		084B4164
Accessories			
EKA 178B	Data communication module MODBUS		084B8571
EKA 175	RS485 LON		084B8579
EKA 183A	Programming key EKC		084B8582
AKS 12	Pt 1000 Sensor	1.5 m	084N0036
EKS 111	PTC 1000 Sensor	1.5 m	084N1178
EKS 211	NTC 5000 Sensor	1.5 m	084N1220

AK-CC 210 – Universal refrigeration controller

The controller is used for evaporator control refrigeration appliances in supermarkets.
With many predefined applications one unit will offer you many options. Flexibility has been planned both for new installations and for service in the refrigeration trade.

Functions

Thermostat
- ON/OFF heating or cooling thermostat
- Sensors: Danfoss Pt1000, PTC1000 or NTC5000
- Day/night control
- Thermostat band
- Alarm thermostat with delay

Defrost
- Electrical, natural or hot gas defrost
- Start via DI input, time interval or schedule (RTC)
- Defrost on demand
- Stop on time or temperature
- Coordinated defrost

Compressor
- Anti cycle timers for optimum protection
- High-effect 16A relays for connection of compressors without use of intermediate relays

DI input
- Multi purpose DI input for defrost start, door function, night setback, main switch, appliance cleaning, general alarm, defrost coordination and thermostat band.

Fan
- Fan delay during defrost
- Fan stop when compressor cuts out
- Fan stop at high S5 temperature

Light control
- Light control of day/night, door, or via network
  Other functions
- S5 sensor can be used for monitoring of condenser temperature or as product sensor
- Door function with alarm monitoring
- Manual control of outputs
- Case cleaning function

Supplementary options
- RS 485 network card for connection to network
- Battery back-up card for real time clock
- "Copy key" programming key

Advantages

- Many applications in the same unit
- The controller has integrated refrigeration-technical functions, so that it can replace a whole collection of thermostats and timers
- Buttons and seal imbedded in the front
- Can control two compressors
- Easy to remount data communication
- Quick setup
- Two temperature references
- Digital inputs for various functions
- Clock function with backup
- HACCP (Hazard Analysis and Critical Control Points)
  - Temperature monitoring and registration of period with too high temperature
  - Factory calibration that will guarantee a better measuring accuracy than stated in the standard EN 441-13 without subsequent calibration (Pt 1000 ohm sensor)

Technical data and ordering

Technical data

Supply voltage	230 V a.c. +10/-15 %. 2.5 VA		
Sensors 3 pcs off either	Pt 1000 ohm (0 °C)PTC (1000 ohm/25 °C) or NTC-M2020 (5000 ohm/25 °C)		
Accuracy	Measuring range	-60 to +99 °C	
	Controller	±1 K below -35 °C ±0.5 K between -35 to +25 °C ±1 K above +25 °C	
	Pt 1000 sensor	±0.3 K at 0 °C ±0.005 K per grad	
Display	LED, 3-digits		
External display	EKA 163A		
Digital inputs	Signal from contact functions Requirements to contacts: Gold plating Cable length must be max. 15 m Use auxiliary relays when the cable is longer		
Electrical connection cable	Max.1,5 mm^2 multi-core cable		
Relays*		CE (250 V a.c.)	UL *** (240 V a.c.)
	DO1. Refrigeration	10 (6) A	10 A Resistive 5FLA, 30LRA
	DO2. Defrost	10 (6) A	10 A Resistive 5FLA, 30LRA
	DO3. Fan	6 (3) A	6 A Resistive 3FLA, 18LRA 131 VA Pilot duty
	DO4. Alarm	4 (1) A Min. 100 mA**	4 A Resistive 131 VA Pilot duty
Environments	0 to +55 °C, During operations -40 to +70 °C, During transport		
	20 - 80% Rh, not condensed		
	No shock influence/vibrations		
Enclosure	IP65 from front. Buttons and packing are embedded in the front.		
Escapement reserve for the clock	4 hours		
Approvals	EU Low Voltage Directive and EMC demands re CE-marking complied with LVD tested acc. EN 60730-1 og EN 60730-2-9, A1, A2 EMC tested acc. EN50082-1 og EN 60730-2-9, A2		

* DO1 and DO2 are 16 A relays. DO3 and DO4 are 8 A relays. Max. load must be keept.
** Gold plating ensures make function wiht small contact loads
*** UL-approval based on 30000 couplings

Ordering

Type	Description	Code no.
AK-CC 210	Refrigeration controller without data communication but prepared for a module	084B8520
Accessories		
EKA 163A	External display for AK-CC 210	084B8562
EKA 178A	Data communication module MODBUS	084B8564
EKA 179A	Data communication module Lon RS 485	084B8565
EKA 181A	Battery & Buzzer	084B8566
EKA 181C	Battery module that will protect the clock in case of lengthy power failure	084B8577
EKA 182A	Copy key EKC - EKC	084B8567
AKS 12	Pt 1000 Sensor 1.5 m	084N0036
EKS 111	PTC 1000 Sensor 1.5 m	084N1178
EKS 211	NTC 5000 Sensor 1.5 m	084N1220

AK-CC 250A/250B – Universal refrigeration controller

The controller is used for evaporator control refrigeration appliances in supermarkets.
With many predefined applications one unit will offer you many options. Flexibility has been planned both for new installations and for service in the refrigeration trade.

Functions

Thermostat
- ON/OFF heating or cooling thermostat
- Sensors: Danfoss Pt1000, PTC1000, NTC
- Day / night control
- Thermostat band
- Alarm thermostat with delay

Defrost
- Electrical, natural or hot gas defrost
- Start via DI input, time interval or schedule (RTC)
- Defrost on demand
- Stop on time or temperature
- Coordinated defrost

Compressor
- Anti cycle timers for optimum protection
- High-effect 16A relays for connection of compressors without use of intermediate relays

DI input
- Multi purpose DI input for defrost start, door function, night setback, main switch, appliance cleaning, general alarm, defrost coordination and thermostat band.

Fan
- Fan delay during defrost
- Fan stop when compressor cuts out
- Fan stop at high S5 temperature

Light control
- Light control of day/night, door, or via network

Other functions
- S5 sensor can be used for monitoring of condenser temperature or as product sensor
- Door function with alarm monitoring
- Manual control of outputs
- Case cleaning function

Supplementary options
- Battery back-up card for real time clock
- "Copy key" programming key

Advantages

- Many applications in the same unit
- The controller has integrated refrigeration-technical functions, so that it can replace a whole collection of thermostats and timers
- Buttons and seal imbedded in the front
- Can control two compressors
- Fixed MODBUS data communication
- Quick setup
- Two temperature references
- Digital inputs for various functions
- Clock function with backup
- HACCP (Hazard Analysis and Critical Control Points)
  - Temperature monitoring and registration of period with too high temperature
  - Factory calibration that will guarantee a better measuring accuracy than stated in the standard EN 441-13 without subsequent calibration (Pt 1000 ohm sensor)

Technical data and ordering

Technical data

Supply voltage	230 V a.c. +10/-15 %. 2.5 VA		
Sensors for AK-CC 250A, 3 pcs off either	Pt 1000 or PTC (1000 ohm / 25°C)		
Sensors for AK-CC 250B	NTC 2000 ohm (25 °C) NTC 2500 ohm (0 °C) NTC 3000 ohm (25 °C) NTC 5000 ohm (25 °C) M 2020 NTC 10000 ohm (25 °C) NTC 10000 ohm (25 °C) Beta 3435		
Accuracy	Measuring range	-60 to +99°C	
	Controller	±1 K below -35°C ±0.5 K between -35 to +25°C ±1 K above +25°C	
	Pt 1000 sensor	±0.3 K at 0°C ±0.005 K per grad	
Display	LED, 3-digits		
External display	EKA 163A (only in stand alone)		
Digital inputs	Signal from contact functions Requirements to contacts: Gold plating Cable length must be max. 15 m Use auxiliary relays when the cable is longer		
Electrical connection cable	Max.1,5 mm² multi-core cable		
Relays*		CE (250 V a.c.)	UL *** (240 V a.c.)
	DO1. Refrigeration	10 (6) A	10 A Resistive 5FLA, 30LRA
	DO2. Defrost	10 (6) A	10 A Resistive 5FLA, 30LRA
	DO3. Fan	6 (3) A	6 A Resistive 3FLA, 18LRA 131 VA Pilot duty
	DO4. Alarm	4 (1) A Min. 100 mA**	4 A Resistive 131 VA Pilot duty
Environments	0 to +55°C, During operations -40 to +70°C, During transport		
	20 - 80% Rh, not condensed		
	No shock influence / vibrations		
Enclosure	IP65 from front. Buttons and packing are embedded in the front.		
Escapement reserve for the clock	4 hours		
Approvals	EU Low Voltage Directive and EMC demands re CE-marking complied with LVD tested acc. EN 60730-1 og EN 60730-2-9, A1, A2 EMC tested acc. EN50082-1 og EN 60730-2-9, A2		

* DO1 and DO2 are 16 A relays. DO3 and DO4 are 8 A relays. Max. load must be keept.
** Gold plating ensures make function wiht small contact loads
*** UL-approval based on 30000 couplings

Ordering

Type	Description	Code no.
AK-CC 250A	Refrigeration controller with MODBUS data communication for Pt or PTC sensors	084B8528
AK-CC 250B	Refrigeration controller with MODBUS data communication. Multi sensor (only NTC)	084B8529

Accessories

EKA 163A	External display for AK-CC 250		084B8562
EKA 181A	Battery & Buzzer		084B8566
EKA 181C	Battery module that will protect the clock in case of lengthy power failure		084B8577
EKA 182A	Copy key EKC - EKC		084B8567
AKS 12	Pt 1000 Sensor	1.5 m	084N0036
EKS 111	PTC 1000 Sensor	1.5 m	084N1178

AK-CC 350 – Universal refrigeration controller

The controller is used for evaporator control refrigeration appliances in supermarkets.
With many predefined applications one unit will offer you many options. Flexibility has been planned both for new installations and for service in the refrigeration trade.
For DIN rail mounting.

Functions

Thermostat
- ON/OFF heating or cooling thermostat
- Sensors: Danfoss Pt1000, PTC1000, NTC
- Day / night control
- Thermostat band
- Alarm thermostat with delay

Defrost
- Electrical, natural or hot gas defrost
- Start via DI input, time interval or schedule (RTC)
- Defrost on demand
- Stop on time or temperature
- Coordinated defrost

Compressor
- Anti cycle timers for optimum protection
- High-effect 20A relay for connection of compressor without use of intermediate relays

DI input
- Multi purpose DI input for defrost start, door function, night setback, main switch, appliance cleaning, general alarm, defrost coordination and thermostat band.

Fan
- Fan delay during defrost
- Fan stop when compressor cuts out
- Fan stop at high S5 temperature

Light control
- Light control of day/night, door, or via network
  Other functions
- S5 sensor can be used for monitoring of condenser temperature or as product sensor
- Door function with alarm monitoring
- Manual control of outputs
- Case cleaning function

Supplementary options
- Programming key

Advantages

- Many applications in the same unit
- The controller has integrated refrigeration-technical functions, so that it can replace a whole collection of thermostats and timers
- Buttons and seal imbedded in the front
- Can control two compressors
- Fixed MODBUS data communication
- Quick setup
- Two temperature references
- Digital inputs for various functions
- Clock function with backup
- HACCP (Hazard Analysis and Critical Control Points)
  - Temperature monitoring and registration of period with too high temperature
  - Factory calibration that will guarantee a better measuring accuracy than stated in the standard EN 441-13 without subsequent calibration (Pt 1000 ohm sensor)

Technical data and ordering

Technical data

Supply voltage	230 V a.c. +10/-15 %. 2.5 VA		
Sensors for AK-CC 250A, 3 pcs off either	Pt 1000 or PTC (1000 ohm / 25°C)		
Sensors for AK-CC 250B	NTC 2000 ohm (25 °C) NTC 2500 ohm (0 °C) NTC 3000 ohm (25 °C) NTC 5000 ohm (25 °C) M 2020 NTC 10000 ohm (25 °C) NTC 10000 ohm (25 °C) Beta 3435		
Accuracy	Measuring range	-60 to +99°C	
	Controller	±1 K below -35°C ±0.5 K between -35 to +25°C ±1 K above +25°C	
	Pt 1000 sensor	±0.3 K at 0°C ±0.005 K per grad	
Display	LED, 3-digits		
External display	EKA 163A (only in stand alone)		
Digital inputs	Signal from contact functions Requirements to contacts: Gold plating Cable length must be max. 15 m Use auxiliary relays when the cable is longer		
Electrical connection cable	Max.1,5 mm² multi-core cable		
Relays*		IEC 60 730	
	DO1. Refrigeration	10 (6) A & (5 FLA, 30 LRA)	1)
		16 (8) A & (10 FLA, 60 LRA)	2)
	DO2. Defrost	6 (3) A & (3 FLA, 18 LRA)	1)
		10 (6) A & (3 FLA, 30 LRA)	2)
	DO3. Fan	6 (3) A & (3FLA, 18 LRA)	1)
		10 (6) A & (5 FLA, 30 LRA)	2)
	DO4. Alarm	4 (1) A Min. 100 mA**	
Environments	0 to +55°C, During operations -40 to +70°C, During transport		
	20 - 80% Rh, not condensed		
	No shock influence / vibrations		
Enclosure	IP 20		
Escapement reserve for the clock	4 hours		
Approvals	EU Low Voltage Directive and EMC demands re CE-marking complied with LVD tested acc. EN 60730-1 og EN 60730-2-9, A1, A2 EMC tested acc. EN50082-1 og EN 60730-2-9, A2		

* DO1 is a 20 A relay. DO2 and DO3 are 16 A relays. DO4 is a 10 A relay. The max. load listed above must be observed when connecting without zero-crossing control. When connecting with zero-crossing, the load must be increased to the value indicated by 2).

** Gold plating ensures make function with small contact loads.

Ordering

Type	Description	Code no.
AK-CC 350	Refrigeration controller with MODBUS data communication	084B4165

Accessories

EKA 163A	External display for AK-CC 350		084B8562
EKA 183A	Programming key		084B8582
AKS 12	Pt 1000 Sensor	1.5 m	084N0036
EKS 111	PTC 1000 Sensor	1.5 m	084N1178

AK-CC 450 – Controller for appliance control

Complete refrigeration appliance control with great flexibility to adapt to all types of refrigeration appliances and cold storage rooms.

- For cooling with brine
- For use with a thermostatic expansion valve.

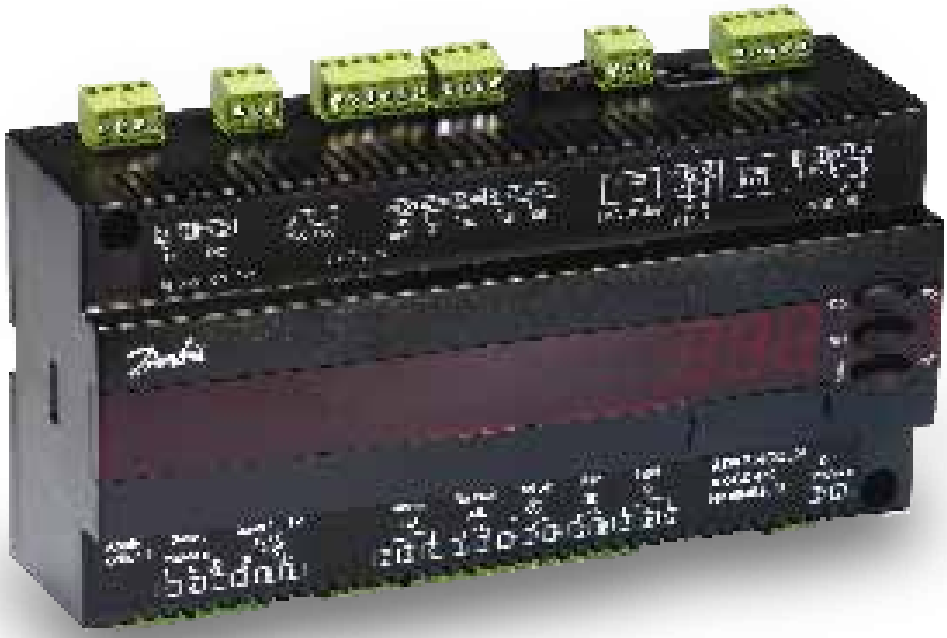

Functions

- Day/night thermostat with ON/OFF or modulating control
- Product sensor S6 with separate alarm limits
- Switch between thermostat settings via digital input
- Start of defrost via schedule, digital input or network
- Natural, electric or hot gas defrost
- Stop of defrost on time and/or temperature
- Coordination of defrost across several controls
- Pulsing of fans when thermostat is satisfied
- Case cleaning function for documentation of HACCP procedure
- Rail heat control via day/night load or dew point
- Door function
- Control of two compressors
- Control of night blinds
- Light control
- Heat thermostat
- Factory calibration that will guarantee a better measuring accuracy than stated in the standard EN 441-13 without subsequent calibration (Pt 1000 ohm sensor)
- Integrated MODBUS communication with the option of mounting a LonWorks communication card

Advantages

- Energy optimisation of the whole refrigeration appliance
- One controller for several different refrigeration appliances
- Integrated display at the front of the controller
- Quick set-up with predefined settings
- Built-in data communication
- Built-in clock function with power reserve

Technical data and ordering

Technical data

Supply voltage	230 V a.c. +10/-15 %. 5 VA, 50/60 Hz		
Sensors	Pt 1000 or PTC 1000 ohm/25 °C (All 4 must be of the same type)		
Accuracy	Measuring range	-60 to +120 °C	
	Controller	±1 K below -35 °C ±0.5 K between -35 to +25 °C ±1 K above +25 °C	
	Pt 1000 sensor	±0.3 K at 0 °C ±0.005 K per grad	
Display	LED, 3-digits		
External display	EKA 163B or 164B. (any EKA 163A or 164A)		
Digital inputs DI1, DI2	Signal from contact functions Requirements to contacts: Gold plating Cable length must be max. 15 m Use auxiliary relays when the cable is longer		
Digital input DI3	230 V a.c.		
Electrical connection cable	Max.1.5 mm² multi-core cable		
Solid state output	DO1 (for solenoid coil)	Max. 240 V a.c. , Min. 28 V a.c. Max. 0.5 A Leak < 1 mA Max. 1 pcs. coil	
Relays*		CE (250 V a.c.)	
	DO3, DO4	4 (3) A	
	DO2, DO5, DO6	4 (3) A	
Environments	0 to +55 °C, During operations -40 to +70 °C, During transport		
	20 - 80% Rh, not condensed		
	No shock influence/vibrations		
Enclosure	IP20		
Mounting	DIN-rail or wall		
Weight	0.4 Kg		
Data communication	Fixed/Build-in		MODBUS
	Extension options		LON RS485/DANBUSS/ TCP/IP(OEM)/MODBUS
	The controller cannot be hooked up with a monitoring unit type m2.		
Power reserve for the clock	4 hours		
Approvals	EU Low Voltage Directive and EMC demands re CE-marking complied with LVD tested acc. EN 60730-1 and EN 60730-2-9, A1, A2 EMC tested acc. EN50082-1 and EN 60730-2-9, A2		

* DO3 and DO4 are 16 A relays. DO2, DO5 and DO6 are 8 A relays. Max. load must be observed.

Ordering

Type	Description	Code no.
AK-CC 450	Case controller with MODBUS data communication	084B8022
Accessories		
EKA 175	Data communication module LON RS 485	084B8579
EKA 176	Data communication module DANBUSS	084B8583
EKA 178B	Data communication module MODBUS	084B8571
EKA 163B	External display with plug for direct connection	084B8574
EKA 164B	External display with operation buttons and plug for direct connections	084B8575
EKA 163A	External display with screw terminals	084B8562
EKA 164A	External display with operation buttons and screw terminals	084B8563

AK-CC 550A – Controller for appliance control

AK-CC 550A is a complete refrigeration appliance control with great flexibility to adapt to all types of refrigeration appliances and cold storage rooms.

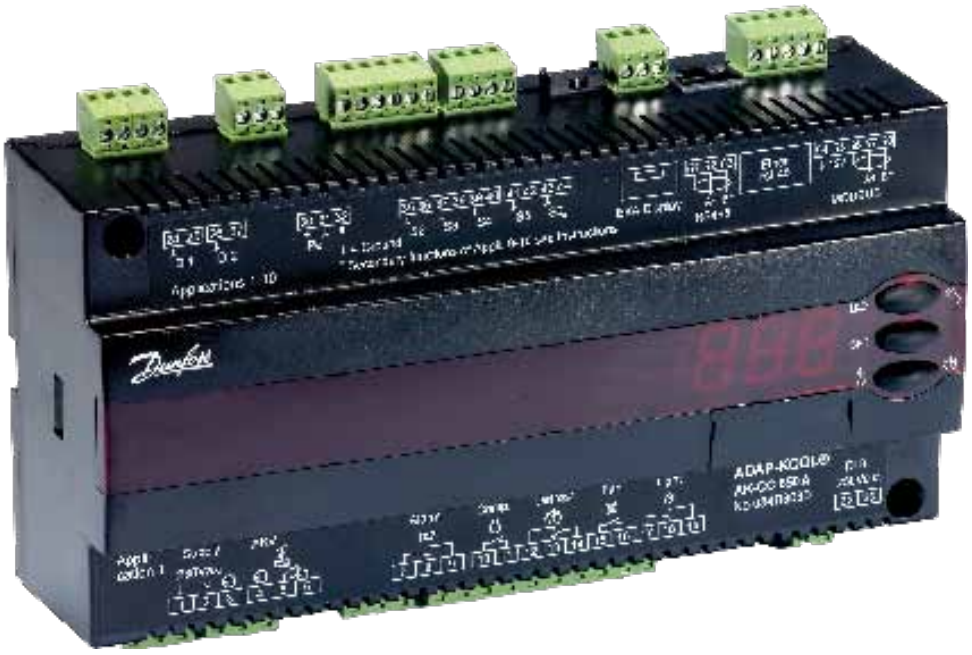

Functions

- Day/night thermostat with ON/OFF or modulating principle
- Product sensor S6 with separate alarm limits
- Switch between thermostat settings via digital input
- Adaptive control of superheat
- Adaptive defrosting based on evaporator performance
- Start of defrost via schedule, digital input or network
- Natural, electric or hot gas defrost
- Stop of defrost on time and/or temperature
- Coordination of defrosting among several controls
- Pulsing of fans when thermostat is satisfied
- Case cleaning function for documentation of HACCP procedure
- Rail heat control via day/night load or dew point
- Door function
- Control of two compressors
- Control of night blinds
- Light control
- Heat thermostat
- Factory calibration that will ensure a better measuring accuracy than stated in the standard EN 441-13 without subsequent calibration (Pt 1000 ohm sensor)
- Integrated MODBUS communication with the option of mounting a LonWorks or Ethernet communication card

Advantages

- Energy optimisation of the whole refrigeration appliance
- One controller for several different refrigeration appliances
- Integrated display at the front of the controller
- Quick set-up with predefined settings
- Built-in data communication
- Built-in clock function with power reserve
- Can be used on CO_2 systems

Technical data and ordering

Technical data

Supply voltage	230 V a.c. +10/-15%, 5 VA	
Sensor S2	Pt 1000	
Sensor S3, S4, S5, S6	Pt 1000 PTC 1000 ohm/25 °C (All 4 must be of the same type)	
Accuracy	Measuring range	-60 to +120 °C
	Controller	±1 K below -35 °C ±0.5 K between -35 to +25 °C ±1 K above +25 °C
	Pt 1000 sensor	±0.3 K at 0 °C ±0.005 K per grad
Measuring of Pe	Pressure transmitter	AKS 32R
Display	LED, 3-digits	
External display	EKA 163B or 164B. (any EKA 163A or 164A)	
Digital inputs DI1, D2	Signal from contact functions Requirements to contacts: Gold plating Cable length must be max. 15 m Use auxiliary relays when the cable is longer	
Digital input DI3	230 V a.c.	
Electrical connection cable	Max. 1.5 mm[193] multi-core cable	
Solid state output	DO1 (for AKV coil)	Max. 240 V a.c. , Min. 28 V a.c. Max. 0,5 A Leak < 1 mA Max. 1 pcs. AKV
Relays*		CE (250 V a.c.)
	DO3, DO4	4 (3) A
	DO2, DO5, DO6	4 (3) A
Environments	0 to +55 °C, During operations -40 to +70 °C, During transport	
	20 - 80% Rh, not condensed	
	No shock influence/vibrations	
Enclosure	IP20	
Mounting	DIN rail or on wall	
Weight	0.4 kg	
Data communication	Fixed	MODBUS
	Extension options	LON RS485/DANBUSS/TCP/IP/MODBUS
	The controller cannot be hooked up with a monitoring unit type m2.	
Power reserve for the clock	4 hours	
Approvals	EU Low Voltage Directive and EMC demands re CE-marking complied with. LVD-tested acc. to EN 60730-1 and EN 60730-2-9 EMC-tested acc. to EN 50081-1 and EN 50082-2	

*) DO3 and DO4 are 16 A relays. DO2, DO5 and DO6 are 8 A relays. Max. load must be observed.

Ordering

Type	Description	Code no.
AK-CC 550A	Case controller with MODBUS data communication	084B8030
EKA 175	Data communication module LON RS 485	084B8579
EKA 176	Data communication module DANBUSS	084B8583
EKA 178B	Data communication module MODBUS	084B8571
EKA 163B	External display with plug for direct connection	084B8574
EKA 164B	External display operation buttons and plug for direct connection	084B8575
EKA 163A	External display with screw terminals	084B8562
EKA 164A	External display with operation buttons and screw terminals	084B8563

AK-CC 750 – Controller for evaporator control

- Multi evaporator controller (1-4 evaporators)
- Preset applications for electronic and thermostatic expansion valves and different defrost methods
- Full energy optimisation functions (dew point, fans, defrost, blinds etc.)
- Remote display connections (up to 4 displays)
- Flexible I/O configuration
- Easy application selection for fast configuration
- Built in RS 485 LON communication

Energy optimisation

- **Adaptive superheat via the AKV electronic expansion valve**
  Optimum utilisation of evaporator at all load conditions:
  Precondition for major energy savings via optimised suction pressure and floating condensing pressure control
- **Adaptive defrost**
  Intelligent defrost skip based on performance monitoring of evaporator
- **Dew point pulsing of rail heat**
  Pulsing of rail heat according to the actual load condition
- **Pulsing of fans**
  Pulsing of fans at thermostat cut out

Food quality/HACCP compliance

- **Modulating temperature control**
  Accurate temperature control
- **Measuring accuracy**
  Factory calibration guarantees a better measuring accuracy than required in the EN 12830 and EN 13485 standards without subsequent calibration on site (Pt 1000 ohms sensor)
- **Product temperature**
  Separate product temperature for compliance with EN 12830 and EN 13485
- **Case cleaning**
  Case cleaning function for documentation of case cleanings carried out according to HACCP procedures

Service and commissioning

- **Easy performance check**
  Provides vital info for performance check
- **Versatile controller**
  - A single controller covering several applications
  - Flexible IO configuration
  - Built-in LON communication
- **Fast and easy commissioning**
  - Preset setup for fast start-up
  - Only 5 settings required

Technical data and ordering

Supply voltage	24 V d.c./a.c. +/- 20%	
Power consumption	8 VA	
Analogue inputs	Pt 1000 ohm /0 °C	Dissolution: 0.1 °C Accuracy: +/- 0.5°
	Pressure transmitter type AKS 32R/AKS 32 (1-5 V)	Dissolution 1 mV Accuracy +/- 10 mV Max. connection of 5 pressure transmitters on one module
	Voltage signal 0-10 V	
	Contact function (On/Off)	On at R < 20 ohm Off at R > 2K ohm (Gold plated contacts not necessary)
On/off supply voltage inputs	Low voltage 0/80 V a.c./d.c.	Off: U < 2 V On: U > 10 V
	High voltage 0/260 V a.c.	Off: U < 24 V On: U > 80 V
Relay outputs SPDT	AC-1 (ohmic)	5 A
	AC-15 (inductive)	3 A
	U	Min. 24 V Max. 230 V Low and high voltage must not be connected to the same output group
	Fuse	5 A (F)
Solid state outputs	Can be used for loads that are frequently cut in and out e.g. decompression, rail heating, fans and AKV valve	Max. 240 V a.c. , Min. 48 V a.c. Max. 0.5 A, Leak < 1 mA Max. 1 AKV
Ambient temperature	During transport	-40 to 70 °C
	During operation	-20 to 55 °C , 0 to 95% RH (non condensing) No shock influences/vibrations
Enclosure	Material	PC/ABS
	Enclosure	IP10 , VBG 4
	Mounting	For mounting on wall or DIN rail
Weight with screw terminals	Modules in100-/200-/controller series	Approx. 200 g/500 g/600 g
Approvals	Complies with EU low voltage directive and EMC requirements	LVD tested according to EN 60730 EMC tested Immunity according to EN 61000-6-2 Emission according to EN 50081-1
	UL file number	E166834

Ordering AK-CC 750

Type	Language	Code no.
AK-CC 750	English, German, French, Italian, Dutch	080Z0121
	English, Spanish, Portuguese	080Z0122
	English, Danish, Swedish, Finnish	080Z0125

Ordering accessories

Extension modules and survey for inputs and outputs

Type	Analog inputs	On/off outputs		On/off supply voltage (DI signal)		Module with switches	Code no.
	For sensors, pressure transmitters etc.	Relay (SPDT)	Solid state	Low voltage (max. 80 V)	High voltage (max. 260 V)	For override of relay outputs	with screw terminals
Controller	11	4	4	-	-	-	-
AK-XM 101A	8						080Z0007
AK-XM 102A				8			080Z0008
AK-XM 102B					8		080Z0013
AK-XM 204A		8					080Z0011
AK-XM 204B		8				x	080Z0018
AK-XM 205A	8	8					080Z0010
AK-XM 205B	8	8				x	080Z0017

Software

AK-ST 500	Software for operation of AK controllers	080Z0161

Remote displays

EKA 163B	Display unit	080B8574
EKA 164B	Display unit with operation buttons	080B8575

Miscellaneous

Trafo (AK-PS 075)	080Z0053
Display cable - 2 meters	084B7298
Display cable - 6 meters	084B7299

EKC 315A – Refrigeration control

The controller and valve can be used where there are requirements to accurate control of superheat and temperature in connection with refrigeration. E.g.:

- Cold store (air coolers)
- Processing plant (water chillers)
- A/C plant

Functions

- Regulation of superheat
- Temperature control
- MOP function
- ON/OFF input for start/stop of regulation
- Input signal that can displace the superheat reference or the temperature reference
- Alarm if the set alarm limits are exceeded
- Relay output for solenoid valve
- PID regulation
- Output signal following the temperature showing in the display

Advantages

- The evaporator is charged optimally – even when there are great variations of load and suction pressure
- Energy savings – the adaptive regulation of the refrigerant injection ensures optimum utilisation of the evaporator and hence a high suction pressure
- Exact temperature control – the combination of adaptive evaporator and temperature control ensures great temperature accuracy for the media
- The superheating is regulated to the lowest possible value at the same time as the media temperature is controlled by the thermostat function

Technical data and ordering

Technical data

Supply voltage	24 V a.c. +/-15% 50/60 Hz, (80 VA) (the supply voltage is galvanically separated from the input and output signals)	
Power consumption	Controller AKV coil	5 VA 55 VA
Input signal	Current signal	4-20 mA or 0-20 mA
	Pressure transmitter	4-20 mA from AKS 33
	Digital input from external contact function	
Sensor input	2 pcs. Pt 1000 ohm	
Output signal	Current signal	4-20 mA or 0-20 mA
	Load	Max. 200 ohm
Relay output	1 pcs. SPST	AC-1: 4 A (ohmic) AC-15: 3 A (inductive)
Alarm relay	1 pcs. SPST	
ICAD	ICAD mounted on ICM	Current signal 4-20 mA or 0-20 mA
Data communication	Possible to connect a data communication module	
Environments	-10 to 55 °C, during operations -40 to +70 °C, during transport	
	20 - 80% Rh, not condensed	
	No shock influence/vibrations	
Enclosure	IP20	
Weight	300 g	
Mounting	DIN rail	
Display	LED, 3 digits	
Terminals	max. 2.5 mm^2 multicore	
Approvals	EU Low Voltage Directive and EMC demands re CE-marking complied with. LVD-tested acc. to EN 60730-1 and EN 60730-2-9 EMC-tested acc. to EN50081-1 and EN 50082-2	

The installation of data communications must comply with the requirements described in literature sheet no. RC8AC

Ordering

Type	Description	Code no.
EKC 315A	Superheat controller, AKS 33, standard	084B7086
EKC 315A	Superheat controller, AKS 32R	084B7085
EKC 315A	I-pack of 084B7085	084B7128

Accessories

EKA 174	Data communication module (accessories), (RS 485 module) with galvanic separation	084B7124
EKA 175	RS485 LON	084B8579
AKS 11	Pt 1000 Sensor	084N0003
AKS 32R	Pressure transmitter -1/12 bar	060G1036
AKS 33	Pressure transmitter -1/12 bar, 0.3%	060G2049
AKS 3000	Pressure transmitter -1/12 bar, 1%	060G1323

EKC 312 – Superheat controller

The controller and valve can be used where there are requirements to accurate control of superheat and temperature in connection with refrigeration. E.g.:

- Processing plant (water chillers)
- Cold store (air coolers)
- A/C plant

Functions	Advantages
· Regulation of superheat · MOP function · ON/OFF input for start/stop of regulation · Alarm if the set alarm limits are exceeded · PID regulation	· The evaporator is charged optimally – even when there are great variations of load and suction pressure. · Energy savings – the adaptive regulation of the refrigerant injection ensures optimum utilisation of the evaporator and hence a high suction pressure. · The superheating is regulated to the lowest possible value.

Technical data and ordering

Technical data

Supply voltage	24 V a.c. +/-15% 50/60 Hz, 10 VA (the supply voltage is galvanically separated from the input and output signals)	
Power consumption	Controller ETS step motor	5 VA 1,3 VA
Input signal	Current signal	4-20 mA or 0-20 mA
	Pressure transmitter	4-20 mA from AKS 33
	Digital input from external contact function	
Sensor input	2 pcs. Pt 1000 ohm	
Alarm relay	1 pcs. SPST	AC-1: 4 A (ohmic) AC-15: 3 A (inductive)
Step motor output	Pulsating 100 mA	
Data communication	Possible to connect a data communication module	
Environments	-10 to +55 °C, during operations -40 to +70 °C, during transport	
	20 - 80% Rh, not condensed	
	No shock influence/vibrations	
Enclosure	IP20	
Weight	300 g	
Mounting	DIN rail	
Display	LED, 3 digits	
Approvals	EU Low Voltage Directive and EMC demands re CE-marking complied with. LVD-tested acc. to EN 60730-1 and EN 60730-2-9 EMC-tested acc. to EN50081-1 and EN 50082-2	

Ordering

Type	Description	Code no.
EKC 312	Superheat controller	084B7250
Accessories		
EKA 175	Data communication module (accessories), (RS 485 module)	084B8579
EKA 174	Data communicationsmodule (accessories), (RS 485 module) with galvanic separation	084B7124

Temperature sensor Pt 1000 ohm/Pressure transmitter type AKS 33:

EKC 316A – Superheat controller

The controller and valve can be used where there are requirements to accurate control of superheat and temperature in connection with refrigeration. E.g.:

- Processing plant (water chillers)
- Cold store (air coolers)
- A/C plant

Functions

- Regulation of superheat
- Temperature control
- MOP function
- ON/OFF input for start/stop of regulation
- Alarm if the set alarm limits are exceeded
- Relay output for solenoid valve
- PID regulation

Advantages

- The evaporator is charged optimally – even when there are great variations of load and suction pressure.
- Energy savings – the adaptive regulation of the refrigerant injection ensures optimum utilisation of the evaporator and hence a high suction pressure.
- The superheating is regulated to the lowest possible value at the same time as the media temperature is controlled by the thermostat function.

Technical data and ordering

Technical data

Supply voltage	24 V a.c. +/-15% 50/60 Hz, 10 VA (the supply voltage is galvanically separated from the input and output signals)	
Power consumption	Controller ETS step motor	5 VA 1,3 VA
Input signal	Current signal	4-20 mA or 0-20 mA
	Pressure transmitter	4-20 mA from AKS 33
	Digital input from external contact function	
Sensor input	2 pcs. Pt 1000 ohm	
Thermostat relay	1 pcs. SPST	AC-1: 4 A (ohmic) AC-15: 3 A (inductive)
Alarm relay	1 pcs. SPST	
Step motor output	Pulsating 100 mA	
Data communication	Possible to connect a data communication module	
Environments	0 to +55 °C, during operations -40 to +70 °C, during transport	
	20 - 80% Rh, not condensed	
	No shock influence/vibrations	
Enclosure	IP20	
Weight	300 g	
Mounting	DIN rail	
Display	LED, 3 digits	
Approvals	EU Low Voltage Directive and EMC demands re CE-marking complied with. LVD-tested acc. to EN 60730-1 and EN 60730-2-9 EMC-tested acc. to EN50081-1 and EN 50082-2	

If battery backup is used:
Battery requirements: 18 V d.c. min. 100 mAh

Ordering

Type	Description	Code no.
EKC 316A	Superheat controller	084B7088
Accessories		
EKA 175	Data communication module (accessories), (RS 485 module)	084B8579
EKA 174	Data communicationsmodule (accessories), (RS 485 module) with galvanic separation	084B7124

Temperature sensor Pt 1000 ohm/Pressure transmitter type AKS 33:

EKD 316 – Superheat controller

The controller and valve can be used where there are requirements to accurate control of superheat and temperature in connection with refrigeration. E.g.:

- Processing plant (water chillers)
- Cold store (air coolers)
- A/C plant

Functions

- Regulation of superheat
- MOP function
- ON/OFF input for start/stop of regulation
- Alarm if the set alarm limits are exceeded
- PID regulation

Advantages

- The evaporator is charged optimally – even when there are great variations of load and suction pressure.
- Energy savings – the adaptive regulation of the refrigerant injection ensures optimum utilisation of the evaporator and hence a high suction pressure.
- The superheating is regulated to the lowest possible value.

Technical data and ordering

Technical data

Supply voltage	24 V a.c. +/-15% 50/60 Hz, 10 VA (the supply voltage is galvanically separated from the input and output signals)	
Power consumption	Controller ETS step motor	5 VA 1,3 VA
Input signal	Current signal[1)]	4-20 mA or 0-20 mA
	Voltage signal[1)]	0-10 V or 1-5 V
	Pressure transmitter	AKS 32R
	Digital input from external contact function	
Sensor input	2 pcs. Pt 1000 ohm	
Alarm relay	1 pcs. SPST	AC-1: 4 A (ohmic) AC-15: 3 A (inductive)
Step motor output	Pulsating 30-300 mA	
Data communication	Mounted with MODBUS data communication	
Environments	0 to +55 °C, during operations -40 to +70 °C, during transport	
	20 - 80% Rh, not condensed	
	No shock influence/vibrations	
Enclosure	IP20	
Weight	300 g	
Mounting	DIN rail	
Display	No, external Display optional (LED, 3 digits)	
Approvals	EU Low Voltage Directive and EMC demands re CE-marking complied with. LVD-tested acc. to EN 60730-1 and EN 60730-2-9 EMC-tested acc. to EN50081-1 and EN 50082-2	

[1)] Ri: mA 400 ohm V: 50 kohm

If battery backup is used:
Battery requirements: 18-24 V d.c. min. 120 mAh

Ordering

Type	Description	Code no.
EKD 316	Superheat controller[2)]	084B8040
Accessories		
EKA 164A	Display with buttons to change settings (with MODBUS communication)[2)]	084B8563

[2)] In order to change seetings either display EKA 164A or software AK-ST 500 (Plus accessories) is needed

Temperature sensor Pt 1000 ohm/Pressure transmitter type AKS 32R:

EKC 368 – Controller for temperature control of unpacked food products

Controller and valve are used where there are high requirements to refrigeration of unpacked food products, e.g. delicatessen appliances, cold rooms for meat products, cold rooms for fruits and vegetables, containers and air conditioning plants.

Functions

- Modulating temperature control
- Defrost function: electric, hotgas or natural
- Alarm if the set alarm limits are exceeded
- Relay outputs for defrost function, solenoid valve, fan and alarm
- Input signal that can displace the temperature reference

Advantages

- Wastage is reduced because the air humidity around the products is kept as high as possible.
- The temperature is kept within an accuracy of ±0.25 °C or better after a transient phenomenon
- A transient phenomenon can be controlled with the adaptive function so that temperature variations is kept on a minimum.
- Defrost sensor, so that the defrost time will be as short as possible.
- PID regulation

Technical data and ordering

Technical data

Supply voltage	24 V a.c. +/-15% 50/60 Hz, 10 VA (the supply voltage is galvanically separated from the input and output signals)	
Power consumption	Controller KVS-step motor	5 VA 1,3 VA
Input signal	Voltage signal	0-10 V or 2-10 V
	Digital input from external contact function	
	Short-circuit (pulse signal) of 18-20 will start a defrost	
Sensor input	2 pcs. Pt 1000 ohm	
Relay output	3 pcs. SPST	AC-1: 4 A (ohmic) AC-15: 3 A (inductive)
Alarm relay	1 pcs. SPST	
Step motor output	Pulsating 100 mA	
Data communication	Possible to connect a data communication module	
Ambient temperature	During operation During transport	-10 - 55 °C -40 - 70 °C
Enclosure	IP20	
Weight	300 g	
Mounting	DIN rail	
Display	LED, 3-digits	
Terminals	max. 2.5 mm^2 multicore	
Approvals	EU Low Voltage Directive and EMC demands re CE-marking complied with. LVD-tested acc. to EN 60730-1 and EN 60730-2-9 EMC-tested acc. to EN50081-1 and EN 50082-2	

If battery backup is used:
Requirements to battery: 18 V d.c. min. 100 mAh

Ordering

Type	Description	Code no.
EKC 368	Mediatemperature controller	084B7079
Accessories		
EKA 172	Realtime clock	084B7069
EKA 175	Data communication module (accessories), (RS 485 module)	084B8579
EKA 174	Data communicationsmodule (accessories), (RS 485 module) with galvanic separation	084B7124

EKC 347 – Liquid level controller

The controller is used for regulation of the refrigerant level in pump reservoirs, separators, intermediate coolers, economisers, condensers or receivers.
A signal transmitter (AKS 4100/4100U) will constantly measure the refrigerant liquid level in the reservoir – the controller will receive the signal and subsequently control the valve, in order to control the refrigerant liquid level according to liquid level setpoint.

Functions

- Liquid level control
- Alarm if the set alarm limits are exceeded
- Relay outputs for upper and lower level limits and for alarm level
- Analog input signal which can displace the reference
- PI control
- Low or High side control
- When AKV/A is selected, a MASTER/SLAVE system can run up to 3 AKV/A with distributed Opening Degree
- Manual control of output
- Limitation of Opening degree possible
- ON/OFF operation with hysteresis

Advantages

- Dedicated controller with easy setup for pumped refrigerant liquid systems
- With the AKS 4100/4100U liquid level transmitter it is possible to set the refrigerant level within a wide range.
- Flexible and can be used with ICM or AKV/A expansion valves ICM - ICM are direct operated motorized valves driven by digital stepper motor type ICAD AKV/A - AKVA or AKV are pulse-width modulating expansion valves.
- PC operation (extra option)
  The controller can be provided with data communication, so that it may be hooked up with other products in the ADAP-KOOL® range of refrigeration controls. Operation, monitoring and data collection can then be performed from a PC.

Technical data and ordering

Technical data

Supply voltage	24 V a.c. +/-15% 50/60 Hz, 60 VA (the supply voltage is galvanically separated from the input and output signals. Input/output are not individual galvanic isolated)	
Power consumption	Controller 20 W coil for AKV	5 VA 55 VA
Input signal	Level signal	4-20 mA or 0-10 V
	Reference displacement	4-20 mA, 0-20 mA, 2-10 V or 0-10 V
	ICM valve feedback signal	From ICAD 0/4-20 mA
	Contact function start/stop of regulation	
Relay output	2 pcs. SPST	AC-1: 4 A (ohmic) AC-15: 3 A (inductive)
Alarm relay	1 pcs. SPST	
Current output	0-20 mA or 4-20 mA Max. load: 500 ohm	
Valve connection	ICM - via current output AKV/A- via 24 a.c. Pulse-Width Modulating output	
Data communication	Possible to connect a data communication module	
Environments	-10 - 55 °C, during operation -40 - 70 °C, during transport	
	20 - 80% Rh, not condensed	
	No shock influence/vibrations	
Enclosure	IP20	
Weight	300 g	
Mounting	DIN rail	
Display	LED, 3-digits	
Terminals	max. 2.5 mm^2 multicore	
Approvals	EU Low Voltage Directive and EMC demands re CE-marking complied with. LVD-tested acc. to EN 60730-1 and EN 60730-2-9 EMC-tested acc. to EN50081-1 and EN 50082-2	

Ordering

Type	Description	Code no.
EKC 347	Liquid level controller	084B7067
Accessories		
EKA 174	Data communicationsmodule (accessories), (RS 485 module) with galvanic separation	084B7124

EKC 331T – Capacity controller

The controller is used for capacity regulation of compressors or condensers in small refrigerating systems.
Regulation can be carried out with up to four identical capacity steps.

Functions

- **Regulation**
  Regulation with up to four relay outputs can be carried out. Regulation takes place with a set reference which is compared to a signal from a pressure transmitter or a temperature sensor.
- **Relay module**
  It is possible to use the controller as relay module, so that the relays are cut in or out by means of an external voltage signal.
- **Alarmfunction**
  A relay becomes activated when the set alarm limits are exceeded.
- **Digital input**
  The digital input can be used for:
  - night operation where the suction pressure is raised
  - heat recovery where the condensing pressure is raised
  - external start/stop of the regulation.
  - Monitoring of safety circuit
- **Possibility of data communication**

Advantages

- Patented neutral zone regulation
- Sequential or cyclic operation

Technical data and ordering

Technical data

Supply voltage	230 V a.c. +/-15% 50/60 Hz, 5 VA	
Input signal	Pressure transmitter*) with 4-20 mA or temperature sensor Pt 1000 ohm or temperature sensor PTC 1000 ohm or voltage signal (0 - 5 V, 0 - 10 V or 5 - 10 V)	
	Digital input to external contact function	
Relay output	4 pcs. SPST	AC-1: 4 A (ohmic) AC-15: 3 A (inductive)
Alarmrelay	1 pcs. SPST	AC-1: 4 A (ohmic) AC-15: 1 A (inductive)
Data communication	Possible to connect a data communication module	
Environments	-10 - 55 °C, during operation -40 - 70 °C, during transport	
	20 - 80% Rh, not condensed	
	No shock influence/vibrations	
Enclosure	IP20	
Weight	300 g	
Mounting	DIN rail	
Display	LED, 3 digits	
Terminals	max. 2.5 mm^2 multicore	
Approvals	EU Low voltage Directive and EMC demands re CE-marking complied with. LVD-tested acc. to EN 60730-1 and EN 60730-2-9 EMC-tested acc. to EN50081-1 and EN 50082-2	

*) As pressure transmitter can be used AKS 32R or AKS 33.
The installation of data communications must comply with the requirements described in literature sheet no. RC8AC

Ordering

Type	Function	Ordering
EKC 331T	Capacity controller	084B7105
EKA 175	Data communication module (accessories), (RS 485 module)	084B8579

AK-PC 530 – Capacity controller

The controller is used for capacity regulation of compressors or condensers in small refrigerating systems.
Numbers of compressors and condensers can be connected, as required.
There are eight outputs and more can be added via an external relay module.

Functions

- Relays for compressor and condenser regulation
- Voltage output for capacity regulation of condenser
- Status inputs. An interrupted signal indicates that the safety circuit has been activated and the respective circuit stopped
- Contact inputs for indication of alarms
- Contact inputs for displacement of references or for indication of alarms
- Alarm relay
- External start/stop of regulation
- Possibility of data communication

Advantages

- Patented neutral zone regulation
- Many possible combinations for compressor constellations
- Sequential or cyclic operation
- Possibility of suction pressure optimization via the data communication

Technical data and ordering

Technical data

Supply voltage	24 V a.c. +/-15% 50/60 Hz, 5 VA	
Input signal	2 pcs. pressure transmitters type AKS 32R (temperature sensors in brine systems)	
	3 pcs. temperature sensor input for PT 1000 ohm/0 °C or PTC 1000 ohm/25 °C	
Digitale input from contact function	1 pcs. for Start/stop of regulation	
	8 pcs. for monitoring of safety circuits	
	3 pcs. for alarm function	
	2 pcs. for alarm function or for displacement of references	
Relay output for capacity regulation	8 pcs. SPST	AC-1: 3 A (ohmic) AC-15: 2 A (inductive)
"AKD start/stop" relay	1 pcs. SPST	
Alarm relay	1 pcs. SPDT	AC-1: 6 A (ohmic) AC-15: 3 (inductive)
Voltage output	0-10 V d.c.	
Display outputs	EKA 163	Pc display
	EKA 165(164)	Operation, Po display and LED
Data communication	Possible to connect a data communication module	
Environments	0 - 55 °C, during operation -40 - 70 °C, during transport	
	20 - 80% Rh, not condensing	
	No shock influence/vibrations	
Enclosure	IP20	
Weight	0.4 kg	
Mounting	DIN rail or on wall	
Terminals	max. 2.5 mm^2 multicore	
Approvals	EU Low voltage Directive and EMC demands re CE-marking complied with. LVD-tested acc. to EN 60730-1 and EN 60730-2-9 EMC-tested acc. to EN61000-6-2 and 3	

Ordering

Type	Function	Code no.
AK-PC 530	Capacity controller	084B8007
Accessories		
EKA 163B	Display unit	084B8574
EKA 164B	Display unit with operation buttons	084B8575
EKA 165	Display unit with operation buttons and light-emitting diodes for input and output	084B8573
EKA 175	Data communication module, RS 485	084B8579
Cables	Cable for display unit 2 m, 1 pcs.	084B7298
	Cable for display unit 6 m, 1 pcs.	084B7299

AK-PC 781 – Capacity controller

- The controller is a complete regulating unit for capacity control of compressors and condensers in commercial refrigeration systems.
- These controllers are particularly well suited to capacity control of cascade or booster systems
- Full capacity control of both circuits can be obtained by using two controllers.

Functions

- Control of up to eight compressors with up to three unloaders each
- Speed control of two compressors
- Can handle various compressor sizes
- Controls up to eight fans
- Fan speed control
- Dirty condenser fault detection
- Separate functions independent of control
- Start-up coordination ensures optimum interaction between the high pressure and low pressure circuits in cascade/booster systems
- Start/stop signal for injection in cascade heat exchanger
- Optimisation of suction pressure for the most heavily loaded refrigeration area
- Condenser optimisation with regard to ambient temperature

Advantages

- Integrated oil management
- Also suitable for use in CO_2 systems
- Heat recovery functions
- CO_2 gas pressure control

Technical data and ordering

Supply voltage	24 V d.c./a.c. +/- 20%	
Power consumption	8 VA	
Analogue inputs	Pt 1000 ohm /0°C	Dissolution: 0.1°C Accuracy: +/- 0.5°
	Pressure transmitter type AKS 32R / AKS 2050 / AKS 32 (1-5 V) Voltage signal 0-10 V	Dissolution 1 mV Accuracy +/- 10 mV Max. connection of 5 pressure transmitters on one module
	Contact function (On/Off)	On at R < 20 ohm Off at R > 2K ohm (Gold plated contacts not necessary)
On/off supply voltage inputs	Low voltage 0/80 V a.c./d.c.	Off: U < 2 V On: U > 10 V
	High voltage 0/260 V a.c.	Off: U < 24 V On: U > 80 V
Relay outputs SPDT	AC-1 (ohmic)	5 A
	AC-15 (inductive)	3 A
	U	Min. 24 V Max. 230 V Low and high voltage must not be connected to the same output group
Solid state outputs	Can be used for loads that are frequently cut in and out e.g. unloaders, solenoid valve	Max. 240 V a.c. , Min. 48 V a.c. Max. 0.5 A, Leak < 1 mA Max. 1 AKV
Ambient temperature	During transport	-40 to 70°C
	During operation	-20 to 55°C , 0 to 95% RH (non condensing) No shock influences/vibrations
Enclosure	Material	PC/ABS
	Enclosure	IP10 , VBG 4
	Mounting	For mounting on wall or DIN rail
Weight with screw terminals	Modules in100-/200-/controller series	Approx. 200 g/500 g/600 g
Approvals	Complies with EU low voltage directive and EMC requirements	LVD tested according to EN 60730 EMC tested Immunity according to EN 61000-6-2 Emission according to EN 50081-1
	UL file number	E166834

Ordering AK-PC 781

Type	Language	Code no.
AK-PC 781	English, German, French, Italian, Dutch	080Z0186
	English, Spanish, Portuguese	080Z0187
	English, Danish, Finnish	080Z0188

Ordering accessories

Extension modules and survey for inputs and outputs

Type	Analog inputs	On/off outputs		On/off supply voltage (DI signal)		Module with switches	Code no.
	For sensors, pressure transmitters etc.	Relay (SPDT)	Solid state	Low voltage (max. 80 V)	High voltage (max. 260 V)	For override of relay outputs	with screw terminals
Controller	11	4	4	-	-	-	-
AK-XM 101A	8						080Z0007
AK-XM 102A				8			080Z0008
AK-XM 102B					8		080Z0013
AK-XM 204A		8					080Z0011
AK-XM 204B		8				x	080Z0018
AK-XM 205A	8	8					080Z0010
AK-XM 205B	8	8				x	080Z0017

Software

AK-ST 500	Software for operation of AK controllers	080Z0161

Remote displays

EKA 163B	Display unit	080B8574
EKA 164B	Display unit with operation buttons	080B8575

Miscellaneous

Power supply AK-PS 075 (18 VA)	080Z0053
Display cable - 2 meters	084B7298
Display cable - 6 meters	084B7299

Optyma™ Control

The Optyma™ Control is particularly suitable for the Optyma™ and Optyma Plus™ condensing units from Danfoss but is also compatible with other condensing units on the market. The control features an attractive new design and simple flexible programming.
It offers both control and protection in a single unit, thanks to the unique built-in differential magneto-thermic circuit breaker, which guarantees safety by cutting the general power supply.

Features of Optyma™ Control, single-phase

- Guaranteed certified safety and protection thanks to incorporated differential magnetothermic circuit breaker, which cuts the general power supply.
- Simple wiring and live outputs.
- New hinged cover for ease of installation and opening.
- Transparent cover for access to magnetothermic breaker, all with IP65 protection rating.
- Simple, flexible programming for optimum versatility.
- Stylish new design.
- Compressor can be run in pump-down stop mode.
- Integration of control and protection in a single room-dedicated unit reduces installation time and costs.

Features of Optyma™ Control, three-phase

- Direct control of the compressor, condenser fans, compressor oil heater, defrosting heaters, evaporator fans, solenoid valve, room light and all standard-compliant electrical safeguards.
- Differential magnetothermic circuit breaker (for cutting the general power supply) accessible from the front panel.
- Adjustable motor circuit breaker for compressor protection accessible from the front panel.
- Easy wiring on the internal terminal block.
- Selection of functioning mode for the compressor (pumpdown / thermostat).
- Auxiliary relay with activation configurable by parameter.
- Transparent cover for access to magnetothermic circuit breaker, all with IP65 protection rating.
- Electronic control with wide LED display and easy-to-use buttons.
- Status signaling with LED icons.

Technical data and ordering

Optyma™ Control AK-RC 101, single-phase

Power supply

Voltage	230 V a.c ± 10% 50/60 Hz
Max absorbed power (electronic control)	~ 7 VA

Ambient conditions

Operating temperature	-5 to +50°C
Storage temperature	-30 to +70°C
Relative humidity	< 90% RH

General characteristics

Connectable sensor types	NTC 10K 1%
Resolution	0.1 °K
Probe read precision	± 0.5 °K
Read range	-45…+45 °C

Output characteristics – max. applicable load (230 V AC)

Compressor	1500 W (AC3)
Defrost	3000 W (AC1)
Fans	500 W (AC3)
Room light	800 W (AC1)
Configurable alarm contact / aux (voltage-free contact)	100 W

General electric protection

Bipolar differential magnetothermic circuit breaker	16A Id = 300 mA switching power 4.5 kA Id = 30 mA (on request)

Insulation and mechanical characteristics

Cover protection rating	IP65
Cover material	self-extinguishing ABS
Type of insulation	Class II
Box dimensions	262 x 168 x 97

Ordering

AK-RC 101	**Code no.**
Optyma™ Control, single-phase	080Z3200

Connection diagram

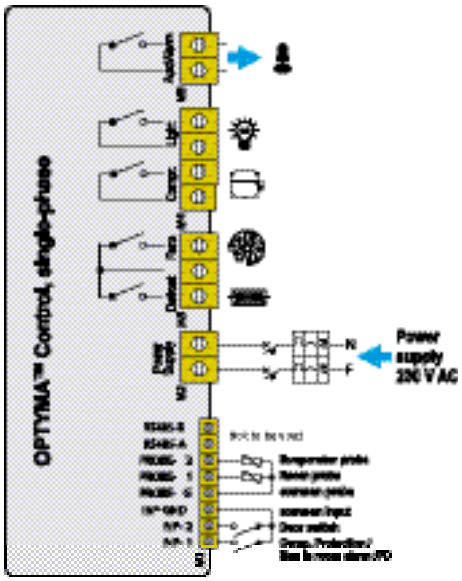

Technical data and ordering

Optyma™ Control AK-RC 103, three-phase

	Optyma™ Control AK-RC 103, three-phase (3 kW)	Optyma™ Control AK-RC 103, three-phase (5 kW)
Case dimensions	400 × 300 x 135 mm	400 × 300 x 135 mm
Protection rating	IP65	IP65
Power supply (3F + N + T)	400 V AC ±10% 50/60Hz	400 V AC ±10% 50/60Hz
Load type	three-phase	three-phase
Operating temperature	-5 to +40°C	-5 to +40°C
Storage temperature	-25 to +55°C	-25 to +55°C
Relative ambient humidity	< 90% RH	< 90% RH
Main switch / general protection	4 poles magnetothermic 16A	4 poles magnetothermic 25A
Compressor protection	motor circuit breaker	motor circuit breaker
Defrosting	electrical	electrical
Status indicators	LED + display	LED + display
Alarm signals	LED + buzzer	LED + buzzer
Ambient probe	NTC 10K 1%	NTC 10K 1%
Evaporator probe	NTC 10K 1%	NTC 10K 1%
Door switch	present	present
High/low pressure switch	present	present
Kriwan® connection	present	present
Compressor functioning mode selection	pump-down / thermostat	pump-down / thermostat
Compressor	370 W to 3000 W	3000 W to 5500 W
Condenser fans output 1	800 W (1ph)	800 W (1ph)
Condenser fans output 2 (separated)		total (1ph)
Evaporator fans	500 W (1ph)	2000 W (1ph / 3ph)
Defrosting heaters	6000 W	9000 W
Room light	800 W (AC1) resistive load	800 W (AC1) resistive load
Solenoid valve	present	present
Compressor oil heater	present	present
Alarm relay	100 W	100 W

Ordering

AK-RC 103	Code no.
Optyma™ Control, three-phase (3 kW) 4.5-6.3 A	080Z3201
Optyma™ Control, three-phase (3 kW) 7-10 A	080Z3202
Optyma™ Control, three-phase (5 kW) 11-16 A	080Z3206
Optyma™ Control, three-phase (5 kW) 14-20 A	080Z3207

Connection diagrams

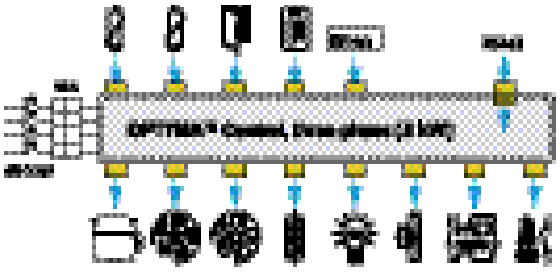

Optyma™ Control, three-phase (3 kW)

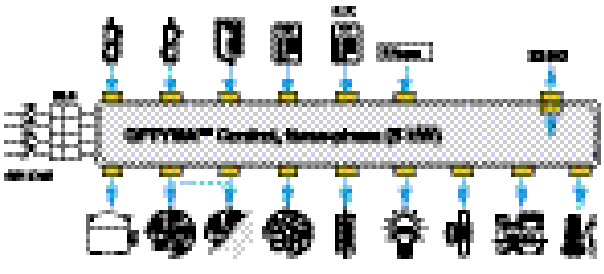

Optyma™ Control, three-phase (5 kW)

Notes

AKS 4100/4100U – Liquid level sensors

The AKS 4100/4100U liquid level sensor is designed specifically to measure liquid levels in a wide range of refrigeration applications.
The liquid level sensor is based on a proven techhology called Time Domain Reflectometry (TDR) or Guided Micro Wave.
AKS 4100/4100U liquid level sensor can be used to measure the liquid level of many different refrigerants in vessels, accumulators, receivers, standpipes, etc.

Advantages and features

- Approved and qualified by Danfoss for refrigeration applications
- One product covering several probe lengths (cable version)
- A single product for all commonly used refrigerants (cable version)
- Cable version requires less top-end clearance for installation and service
- Proven operation with all refrigerants in combination with oil
- No need to clean cable version when fully covered by oil
- The cable version is very compact and easy to handle, ship, install and use with different lengths and refrigerants
- Changes of the liquid dielectric constant (εr) do not affect operation.
- 5000 mm (197 in.) probe length with cable version
- 2-wire loop powered; no separate transformer needed
- Multi language HMI.
  Level and setting readout in mm,cm,m (ft, in.)

Technical data

Supply Voltage	14-30 V d.c. Min/Max. Value for an output of 22 mA at the terminal.	
Ambient temperature supply voltage limitations	-40°C/+80°C(–40°F / +176°F) : 16-30 V d.c. -20°C/+80°C(–4°F / +176°F) : 14-30 V d.c.	
Load	RL [Ω] ≤ ((Uext -14 V)/20 mA) – Default (Error output set to 3.6 mA) RL [Ω] ≤ ((Uext -14 V)/22 mA) – (Error output set to 22 mA)	
Cable gland	AKS 4100 PG 13, M20×1.5 ; (cable diameter: 6-8 mm (0.24-0.31in.) AKS 4100U ½ in. NPT	
Refrigerant temperature	–60°C/100°C (–76°F/212°F)	
Ambient temperature	–40°C / +80°C (–40°F / +176°F) For HMI : –20°C / +60°C (–4°F / +140°F)	
Process pressure	–1 barg / 100 barg (–14.5 psig / 1450 psig)	
Terminals (spring loaded)	0.5-1.5 mm^2 (~20-15 AWG)	
Enclosure:	IP66/67 (~NEMA type 4X)	
Mechanical connection Cable version/Coaxial version	AKS 4100:	G1 in. pipe thread. Aluminium gasket included
	AKS 4100U:	¾ in. NPT
Refrigerants	The listed refrigerants are qualified and approved by Danfoss	
	R717 / NH_3	–40°C / +50°C (–40°F / +122°F)
	R744 / CO_2	–50°C / +15°C (–58°F / +59°F)
	HCFC:	R22 –50°C / +48°C (–58°F / +118°F)
	HFC:	R404A –50°C/ +15°C (–58°F / +59°F) R410A –50°C /+15°C (–58°F / +59°F) R134a –40°C /+50°C (–40°F /+122°F)
The listed refrigerants may be used in the complete temperature range of AKS 4100/4100U, however, the accuracy may be affected if the above listed temperature range is exceeded.		
Other refrigerants within the groups of HCFC and HFC can be detected and measured if the following conditions are fulfilled:		
Reference conditions	Dielectric constant Cable version to be used in R717 / NH3, HCFC and HFC εr, liquid > 5.6	
The coaxial version is mandatory for R744 / CO_2 εr, liquid > 1.3 and marine applications.		
The coaxial version can also be used R717 / NH_3, HCFC and HFC.		

Ordering

Cable version - AKS 4100/4100U

Description	Code number With HMI	Code number Without HMI*
AKS 4100 with 5 m (197 in.) Ø2 mm (Ø0.08 in.) stainless cable and counterweight	084H4501	084H4500
AKS 4100U with 5 m (197 in.) Ø2 mm (Ø0.08 in.) stainless cable and counterweight	084H4521	084H4520

Coaxial version - AKS 4100/4100U (available in predefined lengths, with or without HMI)

Description	Probe length		Code number With HMI	Code number Without HMI*
	mm	in.		
AKS 4100 - Coaxial	500		084H4510	084H4503
AKS 4100 - Coaxial	800		084H4511	084H4504
AKS 4100 - Coaxial	1000		084H4512	084H4505
AKS 4100 - Coaxial	1200		084H4513	084H4506
AKS 4100 - Coaxial	1500		084H4514	084H4507
AKS 4100 - Coaxial	1700		084H4515	084H4508
AKS 4100 - Coaxial	2200		084H4516	084H4509
AKS 4100U - Coaxial		19.2	084H4530	084H4524
AKS 4100U - Coaxial		30	084H4531	084H4525
AKS 4100U - Coaxial		45	084H4532	084H4526
AKS 4100U - Coaxial		55	084H4533	084H4527
AKS 4100U - Coaxial		65	084H4534	084H4528
AKS 4100U - Coaxial		85	084H4535	084H4529

Accessories

Description	Code number
AKS 4100/4100U HMI Service/Display unit with rear cover and mounting bracket	084H4540
AKS 4100/4100U HMI Display	084H4548

Description	Code number
AKS 4100/4100U Signal Converter **without** HMI, excluding cable gland	084H4541

* When ordering without HMI please observe:
Each AKS 4100/AKS 4100 must always be programmed via the HMI display unit.

The HMI display unit can be ordered separately and there are two possibilities:
- 084H4540 AKS 4100/4100U HMI display unit with rear cover and mounting bracket. The mounting bracket is very useful when the AKS 4100/4100U have to be programmed. The same AKS 4100/4100U HMI display unit can be used to programme more AKS 4100/4100U and both Cable and Coaxial versions.
- 084H4548 AKS 4100/4100U HMI display unit (usually spare part).

Notes

AK-SM 350 – System Manager

The unit is a combined data collection unit and monitoring unit for smaller refrigeration installations.

- Corner shops
- Smaller supermarkets
- Restaurants
- Food manufacturers

Functions

The monitoring unit can monitor up to 65 measurements.

They can originate from:

- up to 16 direct connections from sensors or switch functions
- signals from separate refrigeration controllers, EKC and AK types, via data communication
- signals from gas detectors via data communication
- pulse counting function for energy display
- all defined points can be recorded and saved with the set time intervals
- the values can be viewed on the display and retrieved by connecting a printer or connecting a PC or modem

Advantages

Compact unit for registering temperatures

- Collects temperature data to present to authorities
- Alarm function
  - Local alarm or via modem/IP
  - Alarm at deviations in temperature
  - Alarms when doors to cold storage rooms and freezer rooms are open
- Text describing the measuring area can be added to the measuring points

Technical data and ordering

Technical data

Supply		115 V/230 V +10/-15%, 50/60 Hz, 10 VA
Connection		PT 1000 ohm at 0°C or PTC 1000 ohm at 25°C or NTC 5000 ohm at 25°C or Termistor (-80 to 0, -40 to 40 or 0 to 100°C) Digital On/Off signal or Standard 0 - 10 V /4 - 20 mA signal
Display		Graphic LCD, 240 x 64
Direct measuring points		16
Total number of points		65
Measuring range, general		-60 to +50°C
Measuring accuracy at Pt 1000		Resolution 0.1 K Accuracy: +/- 0.5 K
Measuring interval		15, 30, 60, 120 or 240 minutes
Data capacity		55 log points, every 15 min. for 1 year
Battery backup		Button cell for clock function
Power supply for e.g. pressure transmitter		5 V max. 50 mA 12 V max. 50 mA
Pulse counter inputs for output reading		Acc. to DIN 43864. (Only for inputs 1 and 2)
Printer connection		HP PCL-3, Parallel
Modem connection		RJ 45
TCP/IPconnection		RJ 45
PC connection		RJ 45
Data communication		RS232, RS 485 (LON), RS 485 (MODBUS), RS 485 (TP) (TP= Third Party)
Relays	**Quantity**	2
	Max. load	24 V a.c. or 230 V a.c. Imax (AC-1) = 5 A Imax (AC-15) = 3 A
Enclosure		IP20
Ambient environmen		0 to 50°C, during operation -20 to +70°C, during transport 20-80% RH, Non-condensed No shock loads/vibrations
Approvals		EN 60730-1 and EN 60730-2-9 EN 50081-1 and EN 50082-1
Weight		1.6 Kg

Ordering

Type	Measuring points	Description	Language	Code no.
AK-SM 350	16	With inputs for PT 1000 ohm & PTC 1000 ohm	English, German, French, dutch, Italian	080Z8500
			English (UK), Spanish, Portuguese, English (US)	080Z8502
			English, Danish, Swedish, Finnish	080Z8503

Accessories

Printer cable 3 m (parallel)		080Z8401
Cable for PC (see also AK-ST 500 literature)	RJ 45 - Com port	080Z0262

Important: *Installation of data communication cables and repeaters must comply with the requirements contained in the document: Data communication between ADAP-KOOL® Refrigeration system controls.*

EKS/AKS – Sensors, transmitters and level controls

Danfoss can supply a wide range of sensors and transmitters for electronic control of refrigeration applications.

Temperature sensors

- The AK-HS 1000 sensor is based on a high - accuracy PT 1000 element and developed for temperature monitoring and data logging in HACCP systems. It has been designed to simulate a product placed in a refrigeration application. Hereby a realistic HACCP report is achieved.
- Temperature sensors are temperature dependent resistance sensors.
- Sensors in the AKS series are mainly for use in commercial and industrial refrigeration plants where the requirements on grade of enclosure and temperature range are high.
- The sensors are adjusted and meet the tolerance requirements of DIN IEC 751 class B.
- Sensors in the EKS series are mainly for use in air conditioning and comfort applications where there is a focus on the design of the unit and where the requirements to the temperature regulation are less demanding.
- The EKS sensors consist of a PTC element (1000 ohm at 25 °C).

Pressure transmitters

- AKS pressure transmitters are designed for precise and energy optimized control.
- The robust design makes AKS suitable for a wide range of applications, such as:
  - Air conditioning systems-Refrigeration plants
  - Process control applications
  - Laboratory applications
- Product range:
  - 4 - 20 mA (AKS 33, AKS 3000)
  - 1 - 5 V d.c.
  - 1 - 6 V d.c.
  - 0 - 10 V d.c. (AKS 32)10
  - 90% ratiometric output (AKS 32R)

Technical data and code numbers

AK-HS 1000

Product Temperature Sensor

Type	Code number	Signal	Temperature range	Measuring accuracy	Enclosure	Cable length
AK-HS 1000	084N1007	PT1000	–30 → 50 °C	EN 60751 Class B	IP54	5.5 m

EKS 111, 211
AKS 12, 21M

AKS 11

AKS 21W

AKS 21D

Temperature sensors

Type	Code number	Signal	Measure range	Sensor tube	Electrical connection	Cable length
EKS 111	084N1178	PTC1000	–55 → 100 °C	Round	Cable with pins	1.5 m
EKS 111	084N1179	PTC1000	–55 → 100 °C	Round	Cable with pins	3.5 m
EKS 111	084N1182	PTC1000	–55 → 100 °C	Round	AMP Plug	3.5 m
EKS 211	084B4404	NTC5000	–40 → 80 °C	Round	Cable	3.5 m
EKS 211	084N1220	NTC5000	–40 → 80 °C	Round	Cable	1.5 m
AKS12	084N0036	PT1000	–40 → 80 °C	Round	Cable	1.5 m
AKS12	084N0045	PT1000	–40 → 80 °C	Round	AMP Plug	5.5 m
AKS 11	084N0003	PT1000	–50 → 100 °C	Concave	Cable	3.5 m
AKS 11	084N0005	PT1000	–50 → 100 °C	Concave	Cable	5.5 m
AKS 11	084N0008	PT1000	–50 → 100 °C	Concave	Cable	8.5 m
AKS 21 M	084N2003	PT1000	–70 → 180 °C	Round	Cable	2.5 m
AKS 21 W	084N2017	PT1000	–70 → 180 °C	Sensor pipe	Cable	2.5 m
AKS 21 D	084N2035	PT1000	–40 → 80 °C	Channel bulb	Terminal socket/ Type B	–

Pressure transmitters

AKS 32

AKS 32R
AKS 2050

Type	Code number	Signal	Measure range	Max. working pressure	Electrical connection	Connection
AKS 32R, 10-90% rated output signal, 4.75-8 V d.c. supply voltage, 0.3% FS						
AKS 32R	060G0090	10-90% supply voltage	–1/34 bar	55 bar	DIN 43650-A Connection without plug	7/16-20 UNF flare
AKS 32R	060G1036		–1/12 bar	33 bar		
AKS 2050	060G5750		–1/59 bar	100 bar		G3/8 EN 837
AKS 2050	060G5751		–1/99 bar	150 bar		
AKS 2050	060G5752		–1/159 bar	250 bar		
Cable with plug for AKS32R	060G1034				Plug 3 + E (female)	5 m
AKS 32, 1-5 V output signal, 9-30 V d.c. supply voltage, 0.3% FS						
AKS 32	060G2069	1 → 5 V	–1/12 bar	33 bar	DIN 43650-A Plug Pg 9	7/16-20 UNF flare
AKS 32	060G2071	1 → 5 V	–1/34 bar	55 bar		
AKS 33, 4-20 mA output signal, 10-30 V d.c. supply voltage, 0.3% FS						
AKS 33	060G2048	4 → 20 mA	–1/6 bar	33 bar	DIN 43650-A Plug Pg 9	7/16-20 UNF flare
AKS 33	060G2049	4 → 20 mA	–1/12 bar	33 bar		
AKS 33	060G2045	4 → 20 mA	0/25 bar	33 bar		
AKS 33	060G2051	4 → 20 mA	–1/34 bar	55 bar		
AKS 33	060G2104	4 → 20 mA	–1/6 bar	33 bar		G3/8 EN 837
AKS 33	060G2105	4 → 20 mA	–1/12 bar	33 bar		
AKS 33	060G2107	4 → 20 mA	–1/34 bar	55 bar		
AKS 3000, 4-20 mA output signal, 10-30 V d.c. supply voltage, 1.0% FS						
AKS 3000	060G1323	4 → 20 mA	–1/12 bar	33 bar	DIN 43650-A Plug Pg 9	7/16-20 UNF flare
AKS 3000	060G1327	4 → 20 mA	0/30 bar	55 bar		
AKS 3000	060G1896	4 → 20 mA	–1/12 bar	33 bar		G3/8 EN 837
AKS 3000	060G1041	4 → 20 mA	0/25 bar	40 bar		
AKS 3000	060G1066	4 → 20 mA	0/40 bar	100 bar		G3/8 EN 837

AKS 33

AKS 3000

Compressors

Danfoss Compressors

Constant innovation, constant progress

Throughout the last 50 years Danfoss Compressors has built a strong position as a global leader in the refrigeration and air conditioning industry. By constantly listening to the needs of our customers and the daily users of our products, we continue to develop innovative solutions that are energy-efficient and environmentally responsible.

With the most complete range of products for virtually any refrigeration or air-conditioning application, we are proud to offer solutions that are famous and trusted by customers all over the world for their reliability, efficiency and high quality.

Extensive product and application range

Our product range covers all common HC, HFC and HCFC refrigerants. Customers can choose from small, direct current hermetic compressors for mobile applications to large scroll compressors for commercial air conditioning or industrial applications.

Pushing technology further

We were the first to market with R134a. We can also cater for needs with energy optimised, including models with variable speed and monitoring as well as models developed for the solar energy industry. Proof of our constant focus on providing value through maximum efficiency, environmental safety and low noise levels.

Scroll Compressors

Danfoss scroll compressors cover a full range of capacities, perfect for any application from light commercial to large commercial systems. Available in a large variety of single and tandem models for refrigerants R407C, R134a, R410A and R22, the compressors combine high energy efficiency with low sound and minimal vibration.

Special features	Benefits	Applications
· Simple, compact and lightweight construction · Optimised scroll, motor and shell design · 100% suction gas cooled and shielded motor · Large refrigerant capacity · Large oil reserve	· Easy to install and service · Energy efficiency with long lifetime expectancy and low noise · Works in high temperature environments · Reliable operation in all conditions	· Water chillers · Self contained air conditioning units · Split systems · Central air handling units · Heat pumps · Residential air conditioning

Reciprocating Compressors (commercial)

Designed for refrigeration as well as air conditioning applications with refrigerants R22, R407C, R134a, R404A and R507A, the Danfoss Maneurop range of compressors covers all requirements in the 1.5-26 HP range. The compressors are available with rotoblock connections, suitable for parallel mounting as well as factory made units.

Special features	Benefits	Applications
· Large internal volume, large oil sump, sturdy design · 100% suction gas-cooled motor · Internal motor protection · High efficiency circular valve design	· operation under extreme conditions · versatile · no need for air circulation around the compressor · long lifetime expectancy and reliability	· Walk-in freezers & cold rooms · Frozen food processing and storage · Blast freezers · Low temperature racks · Ice cream machines · Display cabinets · Water chillers · Large packaged air conditioners

Reciprocating Compressors (household & light commercial)

Specially optimised for use in household and light commercial applications, hermetic reciprocating compressors from Danfoss provide high cooling capacity in an energy saving design. The compressor series can be used with refrigerants R134a, R290, R404A/R507A, R407C and R600a perfect for cooling needs from 20 W to 6 kW.

Special features	Benefits	Applications
· Compact construction · Durable housing · Optimised motor technology · Wide voltage range · Low GWP refrigerant · Variable speed	· Easy installation at lower cost · Low noise and high energy efficiency · Robust in tough operating conditions · Immune to unstable power supply · Environmentally friendly solutions	· Laboratory and medical equipment · Compressed air dryers · Glass door merchandisers · Display cabinets · Fridges and freezers · Ice cream cabinets · Vending machines · Drink dispensers · Ice making machines · Bottle coolers · Heat pumps · Milk cooling tanks · Wine cellars

Variable Speed Solutions for Light Commercial Refrigeration

Cut a slice out of your energy bill with variable speed control
Optimise cabinet display cooling with SLV compressors
SLV Variable Speed Drive Compressor with intelligent 220 V 50/60 Hz controller is the natural choice when you need a versatile package for a wide range of light commercial LBP applications like freezers and cabinets. You will thus secure both high food quality and a low energy bill in a single solution.
System performance monitoring with built-in data logging function, use of one, intelligent controller for control and alarm management integrated in a compact, reliable and easy to install unit – and many other important enhancements that place SLV compressors far ahead of optimised compressors.
The integrated design of the compressors helps reduce system costs, enabling of more than 30% energy reduction in supermarket and convenience store cabinets, compared to non-optimised compressors.
SLV compressors are available for R404A/R507 and the environmentally friendly refrigerant, R290.

Product advantages	Customer benefits
· Integrated variable speed and adaptive temperature control · High Temperature Stability · Wide voltage range · Uses R290 (other refrigerants possible) · Built-in data logging and failure detection · Remote monitoring option · Lower average compressor speed · Compressor, speed control, cabinet control functions, display and monitoring – all in one integrated solution	· Reduces energy consumption of more than 30% · Reduced food loss and increased food quality · High efficiency and reliability · Allows shop owners to comply with future legal refrigerant requirements now · Environmentally friendly · Enables shop owners to comply with the HACCP standard on food quality · Easy integration in existing and new monitoring systems, e.g. Retail Care® · Lower acoustic noise · Simpler installation, less room for errors, easier field service

Reciprocating Compressors (Direct current)

Tailored for cooling on the move
The excellent performance of the BD series safeguards food, medical and telecommunication. Use:
· BD35F/50F/80F compressors for 12/24V DC, R134a in mobile refrigerators and freezers
· BD220CL compressors for 12V DC, R404A LBP/MBP for bigger van cooling boxes
· BD250GH / BD350GH compressors for 12/24V DC, R134a HBP for mobile spot cooling systems
· BD250GH / BD350GH compressors for 48 V DC, R 134a HBP for telecommunication.
All the compressors are equipped with an electronic control unit with built in speed control, thermostat signal, thermal protection, safety against destructive battery discharge, electronic thermostat and fan speed control on selected.

Product advantages	Customer benefits
· Efficient and reliable · Lasting performance · Low weight · Silent operation · Ideal for solar energy supply · Compact design · Energy optimisation · Speed/capacity control · Energy optimisation, high COP	· Operation under extreme conditions · Minimal energy consumption · Portable beyond traditional limits · Low sound emission · Application possible at extreme voltage rate · Fits virtually anywhere · Safeguard for your food

Reciprocating compressors – BD Direct current

BD35F Multivoltage
R134a, -30°C, +10°C evap. temp.
All mobile applications for portable boxes, boats, trucks etc., can be powered with AC and DC, 85-265 V AC 50/60 Hz, 12-24 V DC, automatic selection of AC when available,
26-150 W cooling capacity.

BD35F with EMI Electronic
R134a, -30°C, +10°C evap. temp.
Designed for boats and trucks if risk of electric interference with radio or other electrical equipment,
26-150 W cooling capacity.

BD35F/50F/80F Basic
R134a, -30°C, +10°C evap. temp.
All mobile applications for portable boxes, boats, trucks etc.,
26-150/36-190/55-270 W cooling capacity.

Applications	Compressors		
	BD35F	BD50F	BD80F
Truck refrigerators	✓		
Boat refrigerators	✓	✓	✓
Bus refrigerators	✓		
Portable boxes	✓	✓	✓
Car minibars (high end)	✓		
Car minibars (SUV, MPV)	✓		
Spot cooling (e.g. trucks)			
Self-contained van boxes		✓	✓
Battery cooling - telecommunication			
Solar chest cabinets	✓	✓	
Heatpumps			

Compressors R134a	Code numbers	Electronic units (voltages & code numbers)								
		Standard **12-24 V DC** 101N0210	*EMI* **12-24 V DC** 101N0220	*High Start* **12-24 V DC** 101N0230	*High Speed* **12-24 V DC** 101N0290	*AEO EMI* **12-24 V DC** 101N0320	*Solar* **10-45 V DC** 101N0400	*AC/DC conv.* **12-24 V DC & 100-240 V AC** 101N0500	*Automotive* **12-24 V DC** 101N0600 101N0630	*Extended EMI* **12-24 V DC** 101N0900
BD35F (mm con.)	101Z0200	✓	✓			✓	✓	✓	✓	✓
BD35F (inch con.)	101Z0204	✓	✓			✓	✓	✓	✓	✓
BD50F (mm con.)	101Z1220	✓	✓	✓		✓		✓		✓
BD50F (inch con.)	101Z0203	✓	✓	✓		✓		✓		✓
BD80F	101Z0280				✓					

Compressors R134a	Capacity [W] at max. speed EN12900 Household/CECOMAF | ASHRAE													
	Evaporating temperature [°C]													
	-40	-35	-30	-25	-23.3	-20	-15	-10	-5	0	5	7.2	10	15
BD35F			26.2 | 32.2	35.9 | 44.2	40.4 | 49.7	50.5 | 62.2	69.8 | 86.0	93.6 | 115	122 | 150					
BD50F			36.7 | 45.2	52.2 | 64.4	58.3 | 71.9	71.4 | 88.2	94.9 | 117	123 | 152	157 | 194					
BD80F			54.8 | 67.6	78.0 | 96.1	86.7 | 107	105 | 130	138 | 170	176 | 218	221 | 274					

Compressors R134a	Code numbers	Power consumption [W] at max. speed												
		Evaporating temperature [°C]												
		-40	-35	-30	-25	-23.3	-20	-15	-10	-5	0	5	7.2	10	15
BD35F	101Z0200			36.0	42.8	45.4	50.8	59.5	68.9	78.5					
BD50F	101Z1220			47.0	59.0	63.0	70.7	82.6	95.0	108					
BD80F	101Z0280			69.0	87.0	93.0	105	123	144	168					

Test condition
EN 12900-CECOMAF / ASHRAE LBP
Condensing temperature: 55 °C / 54.4 °C
Ambient temperature: 32 °C / 32 °C
Suction gas temperature: 32 °C / 32 °C
Liquid temperature: 32 °C

Reciprocating compressors – Household & Light commercial

Hermetic compressors R134a

Application	Compressor	Code numbers			Capacity [W] conditions as listed														Power consumption [W]			
					Evaporating temperature [C°]														Evaporating temperature [C°]			
		Compressor on pallet	Compressor-single pack with HST equipment	Compressor with oil cooling	-45	-40	-35	-30	-25	-20	-15	-10	-5	0	5	10	15	20	-35	-25	-10	5
HBP / MBP / LBP	**PL35G**	101G0250	195B0245						28	39	53	69	89	112	140	172	209			48	67	90
	TL2.5G	102G4251	195B0268				11	22	36	51	69	90	116	145	179	219	264		48	60	84	113
	TL3G	102G4350	195B0006					25	41	59	81	106	136	170	211	258	312			66	96	133
	TL4G	102G4452	195B0008					41	58	80	107	140	180	226	280	342	413			83	118	154
	TL5G	102G4550	195B0011					56	79	107	139	178	224	278	341	414	497			100	149	205
	FR6G	103G6660	195B0191					48	83	124	171	226	290	365	452	552				109	172	241
	FR7.5G	103G6680	195B0024	103G6690				62	99	142	193	254	325	408	505	618				126	194	272
	FR8.5G	103G6780	195B0026	103G6790				85	123	171	228	298	381	478	592	722				151	231	321
	FR10G	103G6880	195B0027	103G6890				92	136	188	250	324	412	516	638	779				179	265	362
	FR11G	103G6980	195B0028					115	170	233	307	395	501	628	780					202	317	445
	SC10G	104G8000	195B0043				23	60	113	183	268	369	486	618	764	925	1100		93	181	290	383
	SC12G	104G8240	195B0050	104G8250			65	113	175	252	348	464	603	768	960	1182	1437		148	227	355	493
	SC15G	104G8520	195B0053	104G8530					164	290	424	568	728	908	1110	1340	1600			233	440	595
	SC18G	104G8820	195B0059	104G8830					283	394	526	684	870	1087	1337	1624	1950			331	507	695
	SC21G	104G8140	195B0048						333	453	606	792	1012	1268	1560	1889	2256			382	575	789
	SC12/12G	104G8280	195B0051				129	226	350	505	696	928	1206	1535	1920	2364	2875		296	454	710	986
	SC15/15G	104G8580	195B0056						328	581	847	1137	1457	1815	2220	2679	3201			465	879	1190
	SC18/18G	104G8880	195B0060						566	788	1052	1368	1740	2174	2674	3248	3900			662	1014	1390
	SC21/21G	104G8180	195B0049						667	907	1212	1584	2025	2536	3120	3778	4511			771	1156	1581
LBP	**PL50F**	101G0222	195B0001						40	56	74	95	120	148						58	84	
	TLS3FT	102G4324	195B0484				21	34	50	69	92	120							45	62	92	
	TLS4FT	102G4424	195B0463				27	43	63	88	117	152							68	87	123	
	TLS5FT	102G4524	195B0321				48	71	98	131	170	216							84.5	114	165	
	TLES5.7FT.3	102G4615					66	90	120	156	200	253							90	120	170	
	TLES6.5FT.3	102G4703	on request				72	100	134	176	228	290							107	142	200	
	NL6FT	105G6628	195B0296				60	84	115	152	198	253							93	123	184	
	NL6.1FT	105G6620	195B0440				60	84	115	152	198	253							93	123	184	
	NL7.3FT	105G6726	195B0441	105G6731			71	100	136	181	235	299							108	145	220	
	NL8.4FT	105G6865	195B0442	105G6866			87	120	162	213	275	350							127	169	252	
	NL10FT	105G6829	195B0327	105G6839			113	158	213	281	361	455							159	217	327	
	SC12FT	104G8205	195B0282 (O)	104G8215			103	163	233	314	408	517	645						184	265	380	
	SC15FT	104G8505	195B0407				126	197	280	376	489	620	772						223	311	451	
	SC18FTX	104G8805	195B0408				144	229	325	437	567	719	896						257	365	517	
	SC21FTX	104G8105	195B0514				192	296	415	553	713	901	1119						296	428	613	
	TL4FX	102G4400	195B0007				31	44	61	81	107	137							60	81	122	
	TL5FX	102G4501	195B0241				43	60	82	110	144	183							70	101	154	
	TLS5FX	102G4520	195B0010				48	71	98	131	170	216							82	112	162	
	TLS6FX	102G4620	195B0235				58	77	104	139	183	235							84	119	181	
	TLS7FX	102G4720	195B0255				66	89	120	160	208	264							97	136	207	
	NL7FX	105G6706	195B0176				71	99	136	182	238	303							71	136	303	
	NL9FX	105G6802	195B0178				74	111	155	207	268	340							109	167	260	
	NL11FX	105G6900	195B0182				102	146	200	268	351	453							137	212	331	
	SC15FX	104G8500	195B0052				100	155	230	325	439	573	726						186	275	432	
	SC18FX	104G8800	195B0057				129	194	280	388	518	669	842						206	313	492	
	SC21FX	104G8100	195B0047				186	246	335	454	602	780	987						275	380	600	
MBP	**NL6.1MF**	105G6660	195B0411							141	189	245	312	390	482	588	709				187	243
	NL7.3MF	105G6772	195B0370							179	236	304	385	480	591	719	867				227	298
	NL8.4MF	105G6879	195B0371							213	277	353	445	553	679	825	994				261	349
	NL10MF	105G6885	195B0276	105G6887						266	346	441	554	687	843	1023	1231				323	435
	NL11MF	105G6151	195B0432							292	380	485	609	756	927	1125	1354				360	495
	NLE10MF	105G6888	195B0566				88	137	194	262	343	440	554	688	845				134	198	308	426
	SC18MFX	104G8804	on request							430	563	722	912	1137	1400						507	657
	SC21MFX	104G8120	195B0478							530	682	866	1085	1343	1645	1996					594	784
	GS26MFX	107B0700	195B0433							754	989	1266	1591	1970	2411						696	942
	GS34MFX	107B0701	195B0435							998	1296	1648	2063	2550	3115						909	1234
HBP	**TL4GH**	102G4455	195B0122								104	140	182	230	287	353	429				121	159
	FR7GH	103G6683	195B0167	103G6692							199	255	327	417	525	655	807				192	258
	SC10GH	104G8041	195B0142								233	352	478	613	762	927	1113	1323			281	395
	SC10GHH		on request	104G8071							259	352	467	604	762	942	1144				260	345
	SC12GH	104G8261	195B0249									429	577	752	957	1196	1471	1787			356	487
	SC15GH	104G8561	195B0144									559	723	915	1139	1398	1698	2041			424	565
	SC15GHH		195B0055	104G8571							435	570	726	911	1135	1405	1731				377	505
	SC18GH	104G8860	195B0246								539	676	855	1077	1340	1645	1990				498	697
	SC18GH	104G8861	195B0266								485	639	825	1047	1310	1618	1976	2389			452	605
	GS26GHX	107B0702	195B0434								937	1198	1510	1880	2316	2826	3417	4098			737	970

*) For TLES5.7FT.3: singlepack compressor =
195B0421 (LST) if no additional connector (for run capacitor)
195B0562 (LST) if additional connector (for run capacitor)

(O) = Oil cooler
(LST) = Low Starting Torque

Test conditions (except GS)
EN 12900-CECOMAF

Condensing temperature:	55 °C
Ambient and suction gas temp.:	32 °C
Liquid temperature:	55 °C

Test condition for GS 26MFX and GS 34MFX
EN 12900-CECOMAF

Condensing temperature:	45 °C
Ambient temp.:	32 °C
Suction gas temp.:	20 °C
Liquid temperature:	45 °C

Test condition for GS 26GHX
EN 12900-CECOMAF

Condensing temperature:	50 °C
Ambient temp.:	32 °C
Suction gas temp.:	20 °C
Liquid temperature:	50 °C

Dis-placement	Recommended compressor cooling at ambient temperatures									Voltage and frequen-cies	Electrical equipment							Compressor	Dimensions					
											LST (RSIR)		HST (CSIR)		HST (CSR)	LST/HST			Height [mm]		Connectors location/I.D. [mm]			
	32°C			38°C			43°C				PTC Starting device		Starting relay	Starting capacitor	Starting unit	Cord relief	Cover							
											spades		spades		spades						Suc-tion	Pro-cess	Dis-charge	Oil cooler
[cm³]	LBP	MBP	HBP	LBP	MBP	HBP	LBP	MBP	HBP		6.3 mm	4.8 mm	6.3 mm	6.3 mm	6.3 mm				A	B	C	D	E	F
2.00		F2	F2		F2	F2				1/5	103N0011	103N0018	117U6021	117U5014		103N1010	103N0491	PL35G	137	135	6.2	6.2	5.0	
2.61	S	S	S	S	S	S	S	S	F2	1/2/3/4	103N0011	103N0018	117U6007	117U5014		103N1010	103N2011	TL2.5G	163	159	6.2	6.2	5.0	
3.13	S	-	F2	S	S	F2	S	S	F2	1/2/3	103N0011	103N0018	117U6009	117U5014		103N1010	103N2010	TL3G	163	159	6.2	6.2	5.0	
3.86	S	-	F2	S	S	F2	S	S	F2	1/2/3	103N0011	103N0018	117U6004	117U5014		103N1010	103N2010	TL4G	173	169	6.2	6.2	5.0	
5.08	S	S	F2	S	S	F2	S	S	F2	1/2/3	103N0011	103N0018	117U6000	117U5014		103N1010	103N2010	TL5G	173	169	6.2	6.2	5.0	
6.23	S	S	F2	S	S	F2	S	S	F2	1/2/3	103N0011	103N0018	117U6000	117U5015		103N1010	103N2010	FR6G	196	191	8.2	6.2	6.2	
6.93	S	F2	F2	S	F2	F2	O/F1	F2	F2	1/2/3	103N0011	103N0018	117U6001	117U5015		103N1010	103N2010	FR7.5G	196	191	8.2	6.2	6.2	6.2
7.95	S	F2	F2	O/F1	F2	F2	O/F1	F2	F2	1/2/3	103N0011	103N0018	117U6015	117U5015		103N1010	103N2010	FR8.5G	196	191	8.2	6.2	6.2	6.2
9.05	S	F2	F2	O/F1	F2	F2	O/F1	F2	F2	1/2/3	103N0011	103N0018	117U6010	117U5015		103N1010	103N2010	FR10G	196	191	8.2	6.2	6.2	6.2
11.15	F2	F2	F2	F2	F2	F2	F2	F2	F2	1/2	103N0011	103N0018	117U6010	117U5015		103N1010	103N2010	FR11G	196	191	8.2	6.2	6.2	
10.29	F1	F1	F2	F1	F1	F2	F1	F1	F2	1/2/3	103N0002		117U6002	117U5017		103N1004	103N2009	SC10G	199	193	8.2	6.2	6.2	
12.87	O/F1	F2	F2	O/F1	F2	F2	O/F1	F2	F2	1/2/3	103N0002		117U6003	117U5017		103N1004	103N2009	SC12G	209	203	8.2	6.2	6.2	6.2
15.28	O/F1	F2	F2	O/F1	F2	F2	O/F1	F2	F2	1/2/3			117U6005	117U5017		103N1004	103N2009	SC15G	209	203	10.2	6.2	6.2	6.2
17.69	O/F1	F2	F2	O/F1	F2	F2	O/F1	F2	F2	2/3			117U6019	117U5017		103N1004	103N2009	SC18G	219	213	10.2	6.2	6.2	
20.95	F2	F2	F2	F2	F2	F2	F2	F2	F2	1/2/3					117-7028	103N1004	103N2009	SC21G	219	213	10.2	6.2	6.2	
2×12.87	F2	F2	F2	F2	F2	F2	F2	F2	F2	1			117U6003	117U5017		103N1004	103N2009	SC12/12G	249	244	12	6.2	6.2	
2×15.28	F2	F2	F2	F2	F2	F2	F2	F2	F2	1			117U6005	117U5017		103N1004	103N2009	SC15/15G	249	244	12	6.2	6.2	
2×17.69	F2	F2	F2	F2	F2	F2	F2	F2	F2	1			117U6019	117U5017		103N1004	103N2009	SC18/18G	259	254	16	6.2	6.2	
2×20.95	F2	F2	F2	F2	F2	F2	F2	F2	F2	1					117-7028	103N1004	103N2009	SC21/21G	259	254	16	6.2	6.2	
2.50		F2			F2					1			117U6021	117U5014		103N1010	103N0491	PL50F	137	135	6.2	6.2	5.0	
3.13	S			S			S			2	103N0011	103N0018	117U6007	117U5014		103N1010	103N2010	TLS3FT	173	169	6.2	6.2	5.0	
3.86	S			S			S			2	103N0011	103N0018	117U6004	117U5014		103N1010	103N2010	TLS4FT	173	169	6.2	6.2	5.0	
5.08	S			S			S			2	103N0011	103N0018	117U6000	117U5014		103N1010	103N2010	TLS5FT	173	169	6.2	6.2	5.0	
5.70	S			S			S			2	103N0011	103N0018	117U6004	117U5014		103N1010	103N2010	TLES5.7FT.3	173	169	6.2	6.2	5.0	
6.49	S			S			S			2	103N0011	103N0018	117U6016	117U5014		103N1010	103N2011	TLES6.5FT.3	173	169	6.2	6.2	5.0	
6.13	S			S			S			2/3	103N0011	103N0018	117U6000	117U5015		103N1010	103N2010	NL6FT	197	191	6.2	6.2	5.0	
6.13	S			S			S			2	103N0011	103N0018	117U6000	117U5015		103N1010	103N2010	NL6.1FT	188	182	6.2	6.2	5.0	
7.27	S			S			O/F1			2	103N0011	103N0018	117U6001	117U5015		103N1010	103N2010	NL7.3FT	188	182	6.2	6.2	5.0	5.0
8.35	S			O/F1			O/F1			2	103N0011	103N0018	117U6001	117U5015		103N1010	103N2010	NL8.4FT	190	184	6.2	6.2	5.0	5.0
10.10	S			O/F1			O/F1			2	103N0011	103N0018	117U6002	117U5015		103N1010	103N2010	NL10FT	203	197	8.2	6.2	6.2	6.2
12.87	O/F1			O/F1			F2			2/3	103N0002		117U6003	117U5017		103N1004	103N2009	SC12FT	209	203	8.2	6.2	6.2	6.2
15.28	F1			F1			F2			2/3	103N0002		117U6005	117U5017		103N1004	103N2009	SC15FT	209	203	10.2	6.2	6.2	
17.69	F2			F2			F2			2/3			117U6019	117U5017		103N1004	103N2009	SC18FTX	219	213	10.2	6.2	6.2	
20.95	F2			F2			F2			2			117U6019	117U5017		103N1004	103N2009	SC21FTX	219	213	10.2	6.2	6.2	
3.86	S			S						1	103N0011	103N0018	117U6009	117U5014		103N1010	103N2010	TL4FX						
5.08	S			S						1	103N0011	103N0018	117U6004	117U5014		103N1010	103N2010	TL5FX						
5.08	S			S						1	103N0011	103N0018	117U6004	117U5014		103N1010	103N2010	TLS5FX						
5.70	S			S						1	103N0011	103N0018	117U6004	117U5014		103N1010	103N2010	TLS6FX						
6.49	S			S*						1	103N0011	103N0018	117U6000	117U5014	103N0016	103N1010	103N2010	TLS7FX						
7.27	S			S						1	103N0011	103N0018	117U6000	117U5015		103N1010	103N2010	NL7FX						
8.35	S			S						1	103N0011	103N0018	117U6001	117U5015		103N1010	103N2010	NL9FX						
11.15	O/F1									1	103N0011	103N0018	117U6002	117U5015		103N1010	103N2010	NL11FX						
15.28	O/F1			O/F1						1	103N0002		117U6003	117U5017		103N1004	103N2009	SC15FX						
17.69	O/F1			O/F1						1			117U6005	117U5017		103N1004	103N2009	SC18FX						
20.95	O/F1			O/F1						1			117U6019	117U5017		103N1004	103N2009	SC21FX						
6.13		F1	F1		F1	F1		F1	F1	7/5	103N0011	103N0018	117U6015	117U5015		103N1010	103N2011	NL6.1MF	190	184	8.2	6.2	6.2	
7.27		F1	F1		F1	F1		F1	F1	7/5	103N0011	103N0018	117U6016	117U5015		103N1010	103N2011	NL7.3MF	197	191	8.2	6.2	6.2	
8.35		F1	F1		F1	F1		F1	F1	7/5	103N0011	103N0018	117U6016	117U5015		103N1010	103N2011	NL8.4MF	197	191	8.2	6.2	6.2	
10.10		F1	F1		F1	F1		F1	F1	7/5	103N0011	103N0018	117U6022	117U5018		103N1010	103N2011	NL10MF	203	197	8.2	6.2	6.2	
11.15		F2	F2		F2	F2		F2	F2	7	103N0011	103N0018	117U6022	117U5018		103N1010	103N2011	NL11MF	203	197	8.2	6.2	6.2	
10.10	F1	F1		F1	F1		F1	F1		1	103N0011	103N0018	117U6003	117U5015		103N1010	103N2011	NLE10MF	203	197	8.2	6.2	6.2	
17.69		F2			F2			F2		7/8			117U6019	117U5017	117-7012	103N1004	103N2008	SC18MFX	219	213	10.2	6.2	6.2	
20.95		F2			F2			F2		7			117U6019	117U5017	117-7038	103N1004	103N2009	SC21MFX	219	213	10.2	6.2	6.2	
26.30		F2			F2			F2		1					117-7055	107B9100/9101/9104*		GS26MFX	259	247	12.9	6.5	8.2	
33.80		F2			F2			F2		1					117-7056	107B9100/9101/9104*		GS34MFX	259	247	12.9	6.5	8.2	
3.86			F2			F2			F2	1/4			117U6000	117U5014		103N1010	103N2011	TL4GH	173	169	6.2	6.2	5.0	
6.93			O/F1			O/F1			O/F1	1/4			117U6016	117U5015		103N1010	103N2011	FR7GH	196	191	8.2	6.2	8.2	8.2
10.29			F2			F2			F2	1/4			117U6005	117U5019		103N1004	103N2008	SC10GH	199	193	10.2	6.2	8.2	
10.29			O			O			O	1					117-7011	103N1004	103N2009	SC10GHH	209	203	10.2	6.2	6.2	
12.87			F2			F2			F2	1/4			117U6011	117U5019		103N1004	103N2008	SC12GH	209	203	10.2	6.2	8.2	
15.28			F2			F2			F2	1/4			117U6011	117U5019		103N1004	103N2008	SC15GH	209	203	10.2	6.2	8.2	
15.28			O			O			O	1					117-7012	103N1004	103N2009	SC15GHH	209	203	10.2	6.2	8.2	8.2
17.69			F2			F2			F2	1			117U6019	117U5017		103N1004	103N2009	SC18GH	219	213	10.2	6.2	8.2	
17.69			F2			F2			F2	1/4					117-7038	103N1004	103N2008	SC18GH	219	213	10.2	6.2	8.2	
26.30			F2			F2			F2	1					117-7070	107B9100/9101/9104*		GS26GH	259	247	12.9	6.5	8.2	

Reciprocating compressors R404A/R507

Application	Compressor	Code numbers: Com-pressor	Code numbers: Com-pressor-single pack with HST equipment	Cooling capacity [W] conditions as listed: Evaporating temperature [°C] -45	-40	-35	-30	-25	-20	-15	-10	-5	0	5	10	15	20	Power consumption [W]: Evaporating temperature [°C] -35	-25	-10	5	Dis-place-ment [cm³]	Recommended at ambient (* = Run capacitor: 32°C LBP	MBP	HBP	LBP
LBP	**TL4CL**	102U2071	195B0021	52	65	84	110	142	182	230	286	352						105	140	198		3.86	F_2	F_2		F_2
LBP	**TL4.5CLX**	102U2117	195B0573		80	106	139	181	232	294	366							138	181	252		4.63	F_2			F_2
LBP	**FR6CL**	103U2670	195B0031	77	108	145	189	243	307	383	473	578						180	242	353		6.23	F_2	F_2		F_2
LBP	**FR7.5CL**	103U2790	195B0398	86	114	154	202	262	333	418	515	630						197	267	395		6.93	F_2	F_2		F_2
LBP	**FR8.5CL**	103U2890	195B0038	99	126	168	222	290	372	468	577							231	315	472		7.95	F_2			F_2
LBP	**NL7CLX**	105F3710	195B0350	102	146	199	263	340	430	536	657	796						214	274	381		7.27	F_1	F_1		F_1
LBP	**NL8.4CLX**	105F3800	195B0481	111	158	216	287	370	468	583	715	866						238	305	428		8.35	F_2	F_2		F_2
LBP	**SC10CL**	104L2523	195B0074			168	258	365	489	634	800	991						243	350	530		10.29	F_2	F_2		F_2
LBP	**SC10CLX**	104L2533	195B0151			166	255	360	483	625	789	977	1190	1430				258	352	508	631	10.29	F_2	F_2		F_2
LBP	**SC12CL**	104L2623	195B0076	58	140	237	353	490	650	835	1048	1292						316	445	654		12.87	F_2	F_2		F_2
LBP	**SC12CLX.2**	104L2697	195B0379	130	205	294	399	522	666	834	1026							365	475	659		12.87	F_2			F_2
LBP	**SC15CLX.2**	104L2896	195B0399	159	250	358	486	637	813	1017	1251	1519						433	565	783		15.28	F_2			F_2
LBP	**SC18CLX.2**	104L2197	195B0332	194	306	439	595	780	995	1245	1532							517	680	949		17.68	F_2			F_2
LBP	**SCE18CLX.2**	104L2196	195B0525	194	306	439	595	780	995	1245	1532							459	621	888		17.68	F_2			F_2
LBP	**SC21CLX**	104L2322	195B0070	226	325	455	617	813	1042	1306	1606							534	702	989		20.95	F_2			F_2
LBP	**GS26CLX**	107B0500	195B0427	325	497	703	949	1240	1580	1974	2427							669	888	1285		26.30	F_2			F_2
LBP	**GS34CLX**	107B0501	195B0439		729	1003	1330	1715	2165	2687	3289							924	1196	1721		33.80	F_2			F_2
LBP	**SC12/12CL**	104L4088	195B0119	115	279	475	706	980	1299	1670	2096	2583						633	891	1308		2×12.87	F_2	F_2		F_2
LBP	**SC15/15CL**	104L4089	195B0109		302	599	905	1230	1584	1976	2417	2916						801	1120	1580		2×15.28	F_2	F_2		F_2
LBP	**SC18/18CL**	104L4090	195B0110	333	541	789	1083	1430	1836	2307	2849	3469						910	1230	1788		2×17.68	F_2	F_2		F_2
LBP	**SC21/21CL**	104L4094	195B0114	452	650	910	1235	1626	2084	2613	3213							1068	1404	1978		2×20.95	F_2			F_2
LBP	**SLV12CLK.2**	104L2603	on request		200	370	542	720	909	1116	1339							404	588	731		12.87	F_2			F_2
MBP	**NL6.1MLX**	105F3611	on request						334	425	530	650	789	946						312	375	6.13		F_2		
MBP	**NF7MLX**	105F3720	195B0443							511	635	777	940	1125	1336					406	488	7.27		F_2		
MBP	**SC10MLX**	104L2506	195B0345						546	687	855	1051	1278	1537						518	633	10.29		F_2		
MBP	**SC12MLX**	104L2606	195B0323						669	838	1038	1272	1542	1852						620	762	12.87		F_2		
MBP	**SC15MLX**	104L2869	195B0391						829	1038	1285	1574	1909	2293						780	979	15.28		F_2		
MBP	**SC18MLX**	104L2139	195B0392						968	1210	1497	1832	2220	2665						860	1080	17.68		F_2		
MBP	**SC18MLX.3**	104L2146	195B0412						1018	1266	1557	1898	2292	2743						878	1096	17.68		F_2		
MBP	**GS21MLX**	107B0502	195B0436						1096	1394	1748	2164	2650	3211						965	1212	21.20		F_2		
MBP	**GS26MLX**	107B0503	195B0437						1426	1810	2254	2764	3351	4022						1213	1532	26.30		F_2		
MBP	**GS34MLX**	107B0504	195B0438						1929	2408	2953	3575	4283	5088						1725	2235	33.80		F_2		
HBP	**TL4DL**	102U2038	195B0166						196	229	281	349	432	527	631					203	256	3.86		F_2	F_2	
HBP	**FR6DL**	103U2680	195B0032						317	385	471	576	698	840	999	1177				354	456	6.23		F_2	F_2	
HBP	**SC10DL**	104L2525	195B0075						471	611	775	968	1192	1450	1747	2085				479	590	10.29		F_2	F_2	
HBP	**SC12DL**	104L2625	195B0077						609	806	1028	1279	1565	1890	2258	2674				624	750	12.87		F_2	F_2	
HBP	**SC15DL**	104L2856	195B0089						759	964	1207	1493	1825	2210	2652	3156				722	865	15.28		F_2	F_2	
HBP	**SC15DLX.2**	104L2871	on request						774	983	1225	1504	1824	2189	2604	3071				739	870	15.28		F_2	F_2	
HBP	**SC10/10DL**	104L4091	195B0111						943	1222	1550	1935	2383	2900	3494	4169				957	1180	2×10.29		F_2	F_2	
HBP	**SC12/12DL**	104L4092	195B0112						1217	1612	2055	2559	3130	3780	4516	5348				1248	1500	2×12.87		F_2	F_2	
HBP	**SC15/15DL**	104L4093	195B0113						1518	1928	2414	2985	3651	4420	5304	6311				1445	1730	2×15.28		F_2	F_2	

SLV = SC Variable speed Compressor. Performances are displayed at 4.000 rpm

Test conditions (except GS)
EN 12900/CECOMAF

Condensing temperature:	45 °C
Ambient temperature:	32 °C
Suction gas temperature:	32 °C
Liquid temperature:	45°C

Test condition for GS 21MLX, GS 26MLX and GS 34MLX
EN 12900-CECOMAF

Condensing temperature:	45°C
Ambient temp.:	32°C
Suction gas temp.:	20°C
Liquid temperature:	45°C

Test condition for GS 26CLX and GS 34CLX
EN 12900-CECOMAF

Condensing temperature:	40°C
Ambient temp.:	32°C
Suction gas temp.:	20°C
Liquid temperature:	40°C

compressor cooling temperature compulsory)					Voltage and frequencies	Electrical Equipment					Dimensions				
						HST (CSIR)		HST (CSR)	LST/HST		Height [mm]		Connectors location/I.D. [mm]		
38°C		43°C				Starting relay	Starting capacitor	Starting device	Cord relief	Cover			Suction	Process	Discharge
						spades		spades			A	B	C	D	E
MBP	HBP	LBP	MBP	HBP		6.3 mm	6.3 mm	6.3 mm							
F_2					1	117U6000	117U5014		103N1010	103N2010	173	169	6.2	6.2	5.0
		F_2			1	117U6001	117U5014		103N1004	117U1022	173	169	6.2	6.2	5.0
F_2					1	117U6015	117U5015		103N1010	103N2010	196	191	8.2	6.2	6.2
F_2					1	117U6016	117U5015		103N1010	103N2010	196	191	8.2	6.2	6.2
					1	117U6010	117U5015		103N1010	103N2010	196	191	8.2	6.2	6.2
F_1		F_2	F_2		1	117U6002	117U5015		103N1010	103N2010	203	197	8.2	6.2	6.2
F_2		F_2	F_2		1	117U6003	117U5015		103N1010	103N2010	203	197	8.2	6.2	6.2
F_2					1	117U6003	117U5017		103N1004	103N2009	209	203	8.2	6.2	6.2
F_2					1/3	117U6005	117U5017		103N1004	103N2008	209	203	8.2	6.2	6.2
F_2					1	117U6005	117U5017		103N1004	103N2009	209	203	8.2	6.2	6.2
					1/4	117U6019	117U5017		103N1004	103N2008	219	213	8.2	6.2	6.2
		F_2			1	117U6019	117U5017		103N1004	103N2009	219	213	10.2	6.2	6.2
		F_2			1	117U6013	117U5012		103N1004	103N2009	219	213	10.2	6.2	6.2
		F_2			1			117-7012	103N1004	103N2009	219	213	10.2	6.2	6.2
					1			117-7012	103N1004	103N2009	219	213	10.2	6.2	6.2
		F_2			1			117-7056	107B9100/9101/9104*		259	247	12.9	6.5	8.2
					1			117-7074	107B9100/9101/9104*		279	267	12.9	6.5	8.2
F_2					1	117U6005	117U5017		103N1004	103N2009	249	244	12	6.2	6.2
F_2					1	117U6019	117U5017		103N1004	103N2009	259	254	12	6.2	6.2
F_2					1			117-7012	103N1004	103N2009	259	254	16	6.2	6.2
					1			117-7012	103N1004	103N2009	259	254	16	6.2	6.2
		F_2			1	105N46xx series controllers			103N1004	103N2009	199	193	10.2	6.2	6.2
F_2			F_2		7/8	117U6022	117U5015		103N1010	103N2011	203	197	8.2	6.5	6.5
F_2			F_2		7/8	117U4139	117U5018		2×117U0349	117U1021	203	197	9.7	6.5	6.5
F_2			F_2		7/8	117U6011	117U5017		103N1004	103N2008	209	203	8.2	6.5	6.5
F_2			F_2		7/8	117U6011	117U5017		103N1004	103N2008	219	213	8.2	6.5	6.5
F_2					1	117U6013	117U5012		103N1004	103N2009	219	213	10.2	6.2	6.2
F_2					1			117-7012	103N1004	103N2009	219	213	10.2	6.2	6.2
F_2					1			117-7012	103N1004	103N2009	219	213	10.2	6.2	6.2
F_2			F_2		1			117-7070	107B9100/9101/9104*		259	247	12.9	6.5	8.2
F_2			F_2		1			117-7072	107B9100/9101/9104*		279	267	16.1	6.5	9.7
F_2			F_2		1			117-7056	107B9100/9101/9104*		279	267	16.1	6.5	9.7
F_2	F_2				1	117U6001	117U5014		103N1010	103N2010	173	169	6.2	6.2	5.0
F_2	F_2				1	117U6010	117U5015		103N1010	103N2010	196	191	8.2	6.2	6.2
F_2	F_2				1	117U6005	117U5017		103N1004	103N2009	209	203	8.2	6.2	6.2
F_2	F_2				1	117U6019	117U5017		103N1004	103N2009	219	213	10.2	6.2	6.2
F_2	F_2				1			117-7028	103N1004	103N2009	219	213	10.2	6.2	6.2
F_2	F_2				1	117U6019	117U5017		103N1004	103N2009	219	213	10.2	6.2	8.2
F_2	F_2				1	117U6005	117U5017		103N1004	103N2009	249	244	12	6.2	6.2
F_2	F_2				1	117U6019	117U5017		103N1004	103N2009	249	244	12	6.2	6.2
F_2	F_2				1			117-7028	103N1004	103N2009	259	254	16	6.2	6.2

Reciprocating compressors R290

Application	Compressor	Code numbers: Compressor	Code numbers: Compressor single pack with HST equipment	EN 12900 (CECOMAF) Capacity [W]: Evaporating temperature [C°]: -45	-40	-35	-30	-25	-20	-15	-10	-5	0	5	10	15	20	Power consumption (W): Evap temp. (°C): -35	-25	-10	5	Displacement [cm³]	Recommended at ambient (* = Run capacitor): 32°C: LBP	MBP	HBP	38°C: LBP
LBP / MBP	TL3CN	102H4380	195B0581		38	54	75	99	128	161	200	244	294	351				90	108	135	162	3.13	F_1	F_1		F_1
	TL4CN	102H4490	195B0589		56.5	77.8	103	132	166	205	250	302	360	426				101	127	162	188	3.86	F_1	F_1		F_1
	TL5CN	102H4590	195B0420		81	109	143	183	230	283	345	416	496	586				130	162	211	266	5.08	F_1	F_1		F_1
	NL7CN	105H6756	195B0451		118	166	223	290	368	458	561	679	814	965				174	221	291	372	7.27	F_1	F_1		F_1
	NL9CN	105H6856	195B0265		138	194	259	335	423	526	643	778	930	1102				196	250	334	428	8.35	F_1	F_1		F_1
	SC10CNX	104H8065	195B0474		126	179	245	325	420	531	660	809	979	1172				208	274	362		10.29	F_2	F_2		F_2
	SC12CNX	104H8265	195B0333		178	250	331	426	540	678	846	1050	1293	1582				269	344	456		12.87	F_2	F_2		F_2
	SC15CNX	104H8565	195B0203		195	297	415	550	707	887	1093	1328	1594	1894				315	420	560		15.28	F_2	F_2		F_2
	SC18CNX	104H8865	195B0414		219	341	480	640	824	1033	1272	1543	1849	2193				370	500	707		17.69	F_2	F_2		F_2
LBP	SC12CNX.2	104H8266	195B0458		186	258	346	453	578	725	895							298	379	502		12.87	F_2			F_2
	SC15CNX.2	104H8566	195B0505		252	332	434	560	714	900	1120							351	445	610		15.28	F_2			F_2
	SC18CNX.2	104H8866	195B0489		244	384	531	689	863	1057	1273							417	541	682		17.69	F_2			F_2
	SC21CNX.2	104H8166	195B0459		339	492	654	828	1020	1233	1471							491	623	855		20.95	F_2			F_2
	SLV15CNK.2	104L8541	195B0505		325	460	615	792	996	1228	1494							436	583	771		15.28	F_2			F_2

SLV = SC Variable speed Compressor. Performances are displayed at 4.000 rpm

Test condition
EN 12900/CECOMAF LBP

Condensing temperature: 45 °C
Ambient temperature: 32 °C
Suction gas temperature: 32 °C
Liquid temperature no subcooling

Reciprocating compressors R600a

Application	Compressor	Code numbers: Compressor	Code numbers: Compressor single pack with LST equipment	EN 12900 (CECOMAF) Capacity [W]: Evaporating temperature [C°]: -45	-40	-35	-30	-25	-20	-15	-10	-5	0	5	10	15	20	Power consumption (W): Evap temp. (°C): -35	-25	-10	5	Displacement [cm³]	Recommended at ambient (* = Run capacitor): 32°C: LBP	MBP	HBP	38°C: LBP
MBP	PLE35K	101H0360	195B0542					27.2	38.4	51.7	67.7	86.6	109						40.1	53.1		3.00	S*	S		S*
LBP/MBP	TLES4KK.2	102H4435	on request			18	28	40	55	74	96	123	154					35	45	61		3.86	S			S
	TLES5KK.2	102H4535	on request			28	41	57	76	99	126	159	196					44	57	80		5.08	S			S
LBP	TLX4.8KK.3	102H4541	195B0565			29	42.1	57	74.2	94.2	117							34.5	46.5	65.5		4.78	S*			S*
	TLES5.7KK.3	102H4638	195B0366			36.4	50.7	68	89	114	144							50.1	66.5	93.4		5.70	S			S
	TLX8.7KK.3	102H4947	195B0361			64.8	87.9	115	146	184	227							65.7	87.7	123		8.67	S*			S*
	NLX10KK.2	105H6101	195B0405			74.5	101	133	171	217	271							63.5	89.5	134		10.09	S*			S*
	NLE10KK.2	105H6851	195B0409			67	91	120	155	198	249							82	109	157		10.09	S			S
	NLE10KK.4	105H6867	195B0517			73.9	98.3	128	164	207	257							81.3	108	161		10.09	S			S

Test condition
EN 12900/CECOMAF LBP

Condensing temperature: 45 °C
Ambient temperature: 32 °C
Suction gas temperature: 20 °C
Liquid temperature no subcooling

Reciprocating compressors R134a

Application	Compressor Compressor	Code numbers: Compressor	Code numbers: Compressor single pack with HST equipment	Code numbers: Compressor with oil cooling	EN 12900 (CECOMAF) Capacity [W]: Evaporating temperature [C°]: -45	-40	-35	-30	-20	-15	-10	-5	0	5	10	15	20	Power consumption (W): Evap temp. (°C): -35	-25	-10	5	Displacement [cm³]
LBP	TL4F	102G4400					31	44	81	107	137											3.86
	TL5F	102G4501					43	60	110	144	183											5.08
	TLS5F	102G4520					48	71	131	170	216											5.08
	TLS6F	102G4620					58	77	139	183	235											5.70
	TLS7F	102G4720					66	89	160	208	264											6.49
	NL6F	105G6606					52	77	151	200	258											6.13
	NL7F	105G6706					71	99	182	238	303											7.27
	NL8F	105G6822					82	112	194	249	317											7.95
	NL9F	105G6802					74	111	207	268	340											8.35
	NL11F	105G6900		105G6910			102	146	268	351	453											11.15
	SC15F	104G8500		104G8510			100	155	325	439	573	726										15.28
	SC18F	104G8800		104G8810			129	194	388	518	669	842										17.69
	SC21F	104G8100		104G8110			186	246	455	610	780	987										20.95

Test condition
EN 12900/CECOMAF LBP

Condensing temperature: 55 °C
Ambient temperature: 32 °C
Suction gas temperature: 32 °C
Liquid temperature no subcooling

compressor cooling temperature compulsory)					Voltage and frequencies	Electrical Equipment												Dimensions				
						LST (RSIR)		LST (RSCR)		Run capacitor		HST (CSIR)		HST (CSR)	LST/HST			Height [mm]		Connectors location/I.D. [mm]		
38°C		43°C				PTC Starting device w/o run capacitor connector		PTC device with run capacitor connector		1 optional 2 compulsory		Starting relay	Starting capacitor	Starting unit	Cord relief	Cover					
						spades		spades		spades		spades		spades								
MBP	HBP	LBP	MBP	HBP		6.3 mm	4.8 mm	6.3 mm	4.8 mm	6.3 mm	4.8 mm	6.3 mm	6.3 mm	6.3 mm				A	B	Suction C	Process D	Discharge E
F_1		F_1	F_1		1	103N0011	103N0018					117U7004	117U5014		103N1010	103N2010		163	159	6.2	6.2	5.0
F_1		F_1	F_1		1	103N0011	103N0018					117U7004	117U5014		103N1010	103N2010		173	169	6.2	6.2	5.0
F_1		F_1	F_1		1	103N0011	103N0018	103N0016	103N0021	117-7117[1]	117-7119[1]	117U7000	117U5014		103N1010	103N2010		173	169	6.2	6.2	5.0
F_1		F_1	F_2		1	103N0011	103N0018	103N0016	103N0021	117-7117[1]	117-7119[1]	117U7002	117U5015		103N1010	103N2010		203	197	8.2	6.2	6.2
F_1		F_2	F_2		1	103N0011	103N0018	103N0016	103N0021	117-7117[1]	117-7119[1]	117U7002	117U5015		103N1010	103N2010		203	197	8.2	6.2	6.2
F_2		F_2	F_2		1									117-7049	103N1004	103N2009		209	203	8.2	6.2	6.2
F_2		F_2	F_2		1									117-7049	103N1004	103N2009		209	203	8.2	6.2	6.2
F_2		F_2	F_2		1									117-7051	103N1004	103N2009		209	203	8.2	6.2	6.2
F_2		F_2	F_2		1									117-7034	103N1004	103N2009		219	213	10.2	6.2	6.2
		F_2			1							117U7003	117U5017		103N1004	103N2009		209	203	8.2	6.2	6.2
		F_2			1							117U7005	117U5017		103N1004	103N2009		209	203	8.2	6.2	6.2
		F_2			1							117U7011	117U5017		103N1004	103N2009		219	213	10.2	6.2	6.2
		F_2			1							117U7013	117U5012		103N1004	103N2009		219	213	10.2	6.2	6.2
		F_2			1	105N46xx series controllers									103N1004	103N2009		199	193	10.2	6.2	6.2

compressor cooling temperature compulsory)					Voltage and frequencies	Electrical Equipment												Dimensions				
						LST (RSIR)		LST (RSCR)		Run capacitor		HST (CSIR)		HST (CSR)	LST/HST			Height [mm]		Connectors location/I.D. [mm]		
38°C		43°C				PTC Starting device w/o run capacitor connector		PTC device with run capacitor connector		1 optional 2 compulsory		Starting relay	Starting capacitor	Starting unit	Cord relief	Cover					
						spades		spades		spades		spades		spades								
MBP	HBP	LBP	MBP	HBP		6.3 mm	4.8 mm	6.3 mm	4.8 mm	6.3 mm	4.8 mm	6.3 mm	6.3 mm	6.3 mm				A	B	Suction C	Process D	Discharge E
S					1			103N0016	103N0021	117-7117[2]	117-7119[2]				103N1010	103N0491		137	135	6.2	6.2	5.0
					1	103N0011	103N0018	103N0016	103N0021	117-7117[1]	117-7119[1]				103N1010	103N2010		173	169	6.2	6.2	5.0
					1	103N0011	103N0018	103N0016	103N0021	117-7117[1]	117-7119[1]				103N1010	103N2010		173	169	6.2	6.2	5.0
		S*			1			103N0016	103N0021	117-7131[2]	117-7132[2]				103N1010	103N2010		173	169	6.2	6.2	5.0
		S			1	103N0011	103N0018	103N0016	103N0021	117-7117[1]	117-7119[1]				103N1010	103N2010		163	159	6.2	6.2	5.0
		S*			1			103N0016	103N0021	117-7117[2]	117-7119[2]				103N1010	103N2010		173	169	6.2	6.2	5.0
		S*			1			103N0016	103N0021		117-7136[2]				103N1010	103N2010		203	197	6.2	6.2	5.0
					1	103N0011	103N0018	103N0016	103N0021	117-7117[1]	117-7119[1]				103N1010	103N2010		197	191	6.2	6.2	5.0
		S			1	103N0011	103N0018	103N0016	103N0021	117-7117[1]	117-7119[1]				103N1010	103N2010		190	183	6.2	6.2	5.0

PL/PLE

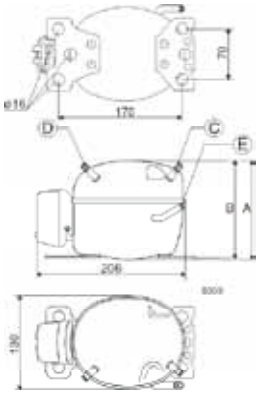

TL

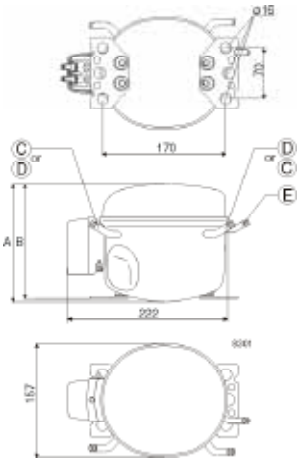

TLS/TLES/ TLX

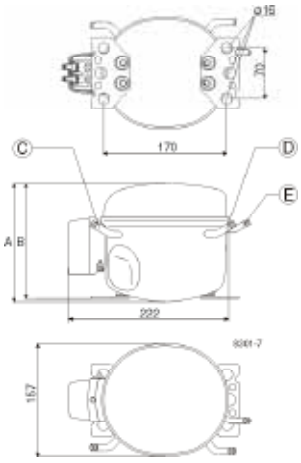

SLV

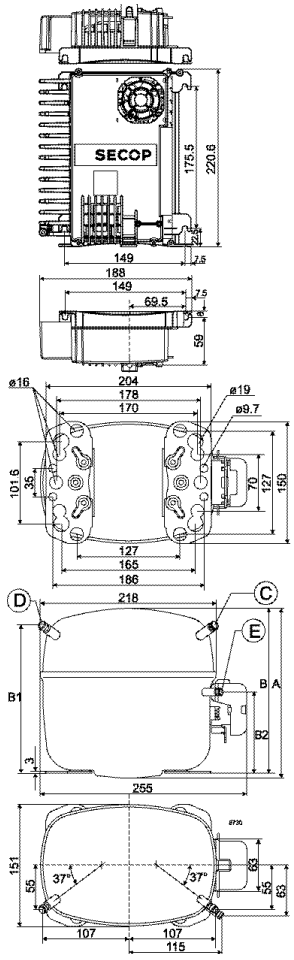

NL/NLE/NLX

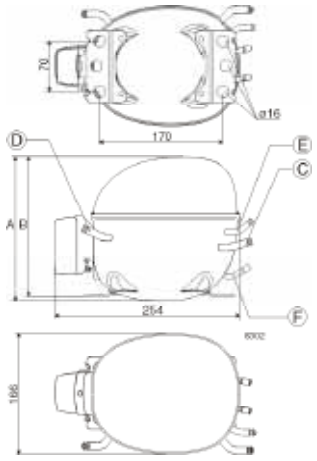

NF

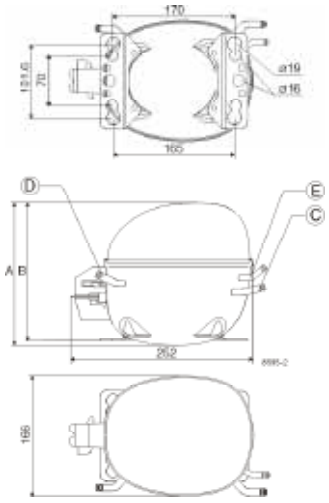

FR

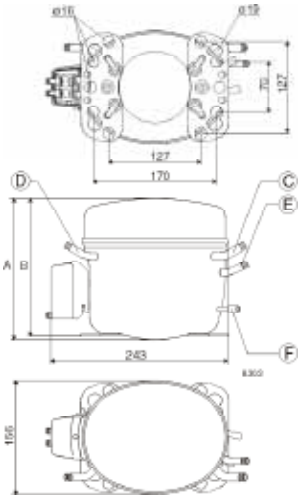

SC

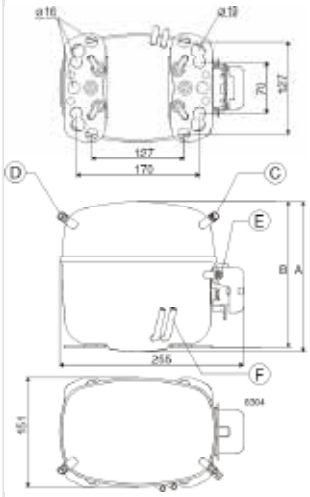

GS

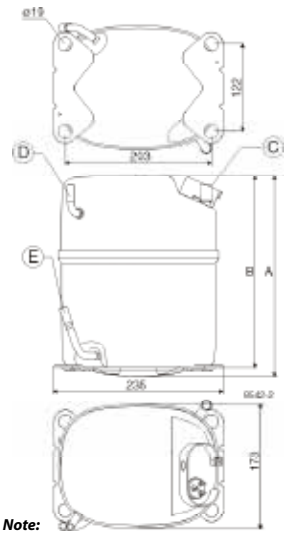

Note:
On GS34CLX compressors suction and process connectors are interchanged.

BD

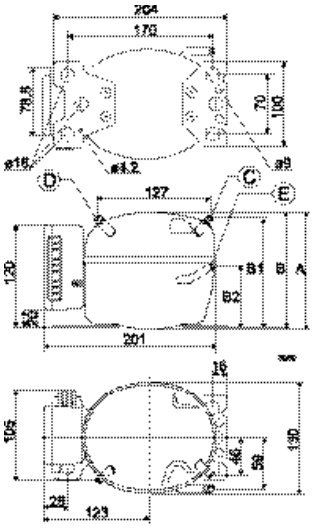

Mounting accessories

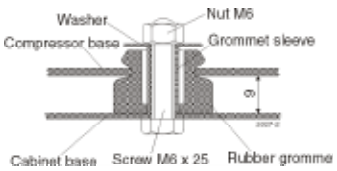

Bolt joint for
one compressor: 118-1917
in quantities: 118-1918

Bolt joint for
one GS compressor: 107B9150
(M8 × 40,
base plate distance:
17 mm)

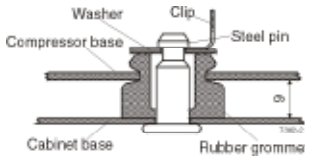

Snap-on
in quantities: 118-1919

Protection Screen for PTC

Note: To fulfil the requirements of EN 60355-2-34 the protection screen 103N0476 must be applied to the PTC starting device.

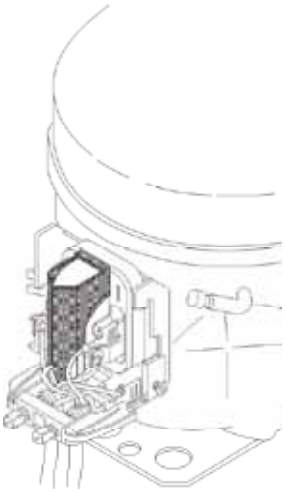

Model designation

Compressor design	Optimization level	Compressor size	Application range	Start characteristics	Generation
PL TL NL FR SC GS	Blank Standard energy level S Semi-direct intake E Energy-optimized	Nominal displacement in cm^3 Exception: For PL compressors the capacity at rating point is stated.	CL R404A/ R507 LBP CN R290 LBP (MBP) DL R404A/ R507 HBP F R134a LBP/ (MBP) FT R134a LBP tropical G R134a LBP/ MBP/HBP GH R134a Heat Pumps GHH R134a Heat Pumps optimized K R600a, LBP/(MBP) MF R134a MBP ML R404A/ R507 MBP	Blank => universal (principal rule) X = HST characteristics (expansion valve)	Blank => first generation .2 => second generation .3 => third generation etc.

Examples

TL	ES	5.7	FT		.3
NL	E	10	MF		
SC		15	CN	X	.2

LST - RSIR

PL

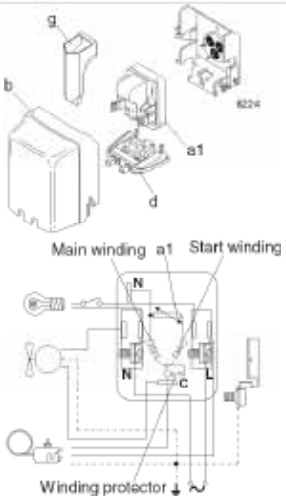

TL-TLS-TLES-NL-NLE-FR

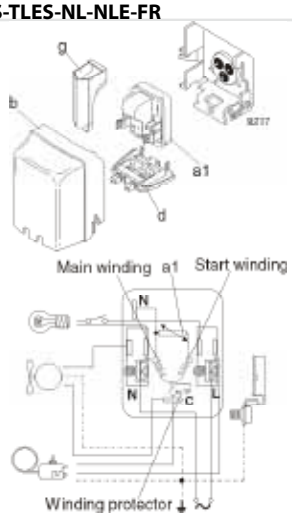

SC

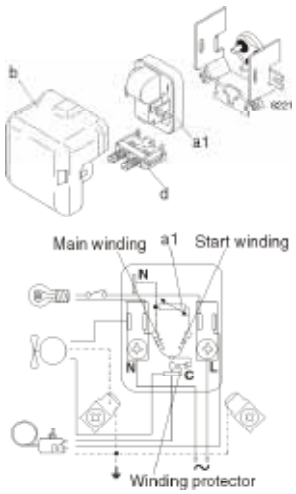

HST - CSIR

PL

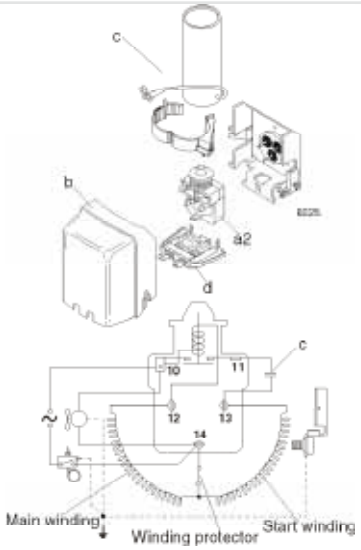

TL-TLS-TLES-NL-NLE-FR

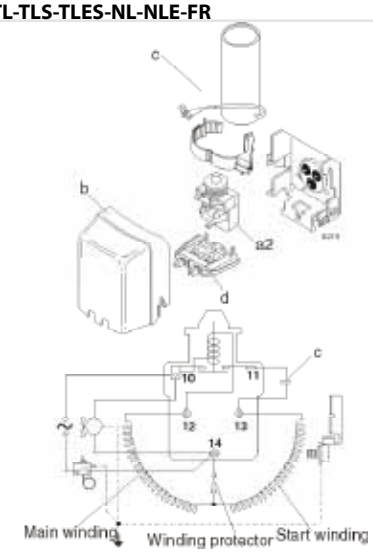

SC

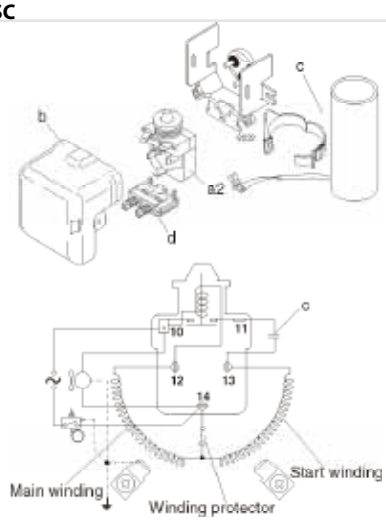

HST - CSIR

NF

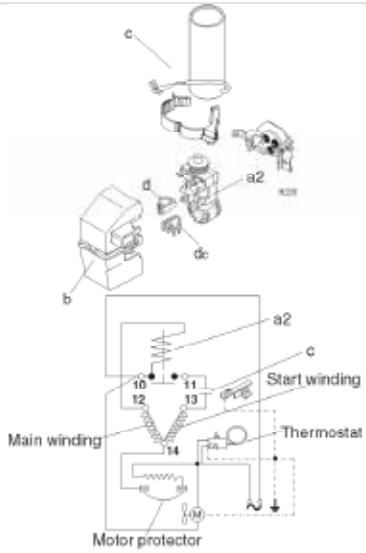

HST - CSR

SC

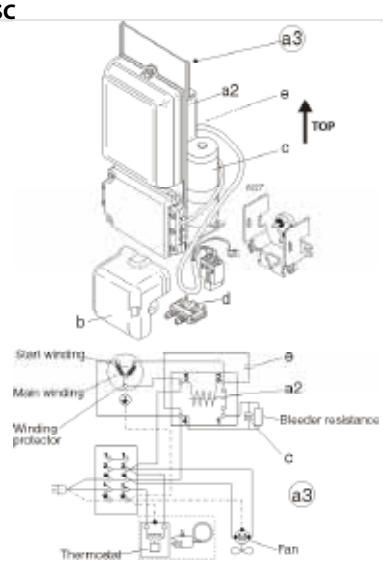

GS

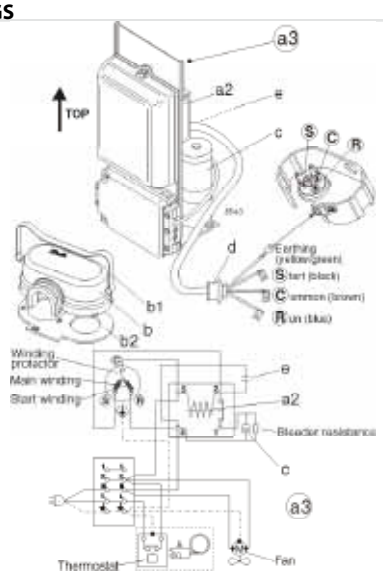

Legend

a1: PTC starting device
a2: Starting relay
a3: Starting device

b: Cover
b1: Clamp (part of compressor)
b2: Gasket (part of compressor)

c: Starting capacitor
d: Cord relief
e: Run capacitor
g: Protection screen for PTC

SC Twin

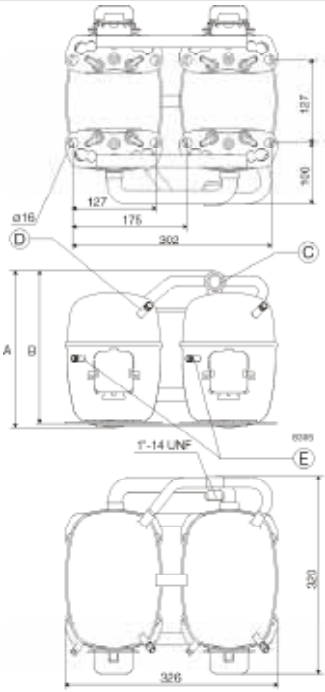

Accessories for SC Twin

SC10/10, SC12/12 and SC15/15:

Service valve for 12 mm tube	118-7350
Solder connector for 12 mm tube	104B0584

SC18/18 and SC21/21:

Service valve for 16 mm tube	118-7351
Solder connector for 16 mm tube	118-7405

SC10/10, SC12/12, SC15/15, SC18/18 and SC21/21:

Seal ring for service valve and solder connector	118-3638
Time-delay relay	117N0001
Check valve (to be used with time-delay relay)	020-1014

HST - CSR

SC Twin

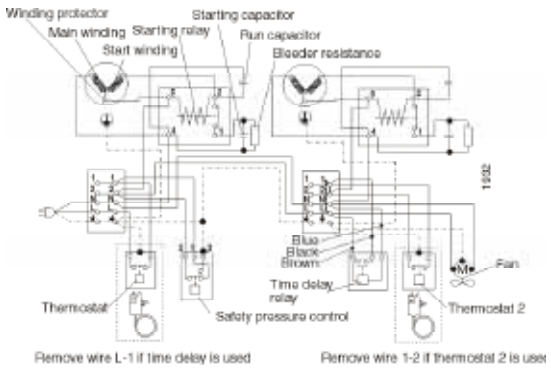

HST - CSIR

SC Twin

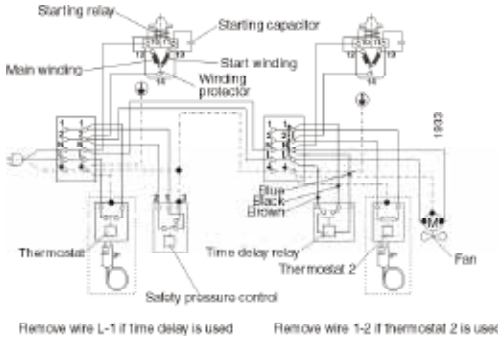

Applications
LBP: Low Back Pressure
MBP: Medium Back Pressure
HBP: High Back Pressure

Motor types
RSIR: Resistant Start Induction Run
RSCR: Resistant Start Capacitor Run
CSIR: Capacitor Start Induction Run
CSR: Capacitor Start Run

Starting devices
LST: Low Starting Torque
LST is used with capillary tube control and pressure equalizing. (Pressure equalizing may exceed 10 minutes). The PTC starting device requires 5 minutes cooling before each start.
HST: High Starting Torque
HST consisting of relay and starting capacitor, is used for expansion valve control or for capillary tube control without pressure equalizing.

Test conditions EN 12900 (CECOMAF)
PL/TL/TLS/NL/FR/SC/BD

Application	R134a	R404A/R507 R290
Condensing temperature	55°C	45°C
Ambient temperature	32°C	32°C
Suction gas temperature	32°C	32°C

No subcooling
PL/TL/TLS/NL/FR/SC: 220 V 50 Hz
BD: 12 V, 24V or 56 V DC

Test conditions ASHRAE
BD

Application	R600a R134a	R404A/R507 R290
Condensing temperature	54.4°C	45°C
Ambient temperature	32°C	32°C
Suction gas temperature	32°C	32°C
Liquid temperature	32°C	32°C

12 V, 24V or 56 V DC

Test conditions EN 12900
GS

Application	LBP	MBP	HBP
Condensing temperature	40°C	45°C	50°C
Ambient temperature	32°C	32°C	32°C
Suction gas temperature	20°C	20°C	20°C

Liquid temperature no subcooling
220 V 50 Hz

Electrical equipment GS compressors
* = Gasket/cover/clamp are parts of compressor

Compressor cooling
S = Static cooling normally sufficient
O = Oil cooling
F_1 = Fan cooling 1.5 m/s (compressor compartment temp. equal to ambient temperature)
F_2 = Fan cooling 3.0 m/s necessary
** = run capacitor 4 µF compulsory

Voltages and frequencies
1 = 198-254 V, 50 Hz
2 = 187-254 V, 50 Hz, LBP
3 = 198-254 V, 60 Hz, LBP
4 = 198-254 V, 60 Hz, HBP
5 = 198-254 V, 60 Hz, MBP
6 = 207-254 V, 60 Hz, HBP
7 = 187-254 V, 50 Hz, MBP
8 = 187-254 V, 60 Hz, MBP
9 = 187-254 V, 60 Hz, LBP

1 Watt = 0.86 kcal/h
1 Watt = 3.41 Btu/h

Reciprocating compressors – Commercial

Performance data

NTZ R404A / R507A

Model	To	-45		-40		-35		-30		-25		-20		-15		-10	
	Tc	Qo	Pe	Qo	Pe	Qo	Pe	Qo	Pe	Qo	Pe	Qo	Pe	Qo	Pe	Qo	Pe
NTZ048	45	190	0.35	420	0.59	710	0.84	1 240	1.09	1 700	1.34	2 240	1.57	2 860	1.79	3 570	1.99
NTZ068	45	520	1.02	870	1.28	1290	1.54	2110	1.81	2785	2.09	3570	2.38	4490	2.68	5540	2.99
NTZ096	45	-	-	910	1.29	1 420	1.67	2 430	2.09	3 360	2.53	4 510	2.99	5 900	3.47	7 550	3.97
NTZ108	45	-	-	1120	1.57	1770	2.03	3010	2.49	4080	2.95	5340	3.40	680	3.85	8530	4.29
NTZ136	45	-	-	1 570	2.27	2 360	2.86	3 890	3.47	5 200	4.08	6 750	4.69	8 570	5.29	10 710	5.87
NTZ215	45	1 190	2.31	2 240	3.17	3 540	4.08	5 970	5.01	8 030	5.94	10 440	6.86	13 220	7.72	16 420	8.52
NTZ271	45	2 120	3.57	3 470	4.61	5 140	5.66	8 380	6.73	11 050	7.81	14 190	8.90	17 840	10.00	22 040	11.10
NTZ430	45	2 370	4.61	4 480	6.33	7 080	8.15	11 930	10.02	16 060	11.89	20 880	13.71	26 450	15.44	32 840	17.04
NTZ542	45	4 240	7.14	6 940	9.21	10 290	11.32	16 760	13.46	22 110	15.62	28 380	17.80	35 670	19.99	44 080	22.20

Legend: **To:** Evaporating temperature in °C **Tc:** Condensing temperature in °C **Qo:** Cooling capacity in W **Pe:** Power input in kW Superheat = 10K; Subcooling = 0 K Suction temp. = 20°C; Subcooling = 0 K Voltage: 400 V / 3 / 50 Hz

MT R22

Model	To	-25		-20		-15		-10		-5		0		5		10		15	
	Tc	Qo	Pe	Qo	Pe	Qo	Pe	Qo	Pe	Qo	Pe	Qo	Pe	Qo	Pe	Qo	Pe	Qo	Pe
MT018	45	570	0.64	890	0.76	1 300	0.88	1 810	1.00	2 450	1.10	3 220	1.19	4 150	1.26	5 260	1.31	6 550	1.33
MT022	45	740	0.77	1 280	0.95	1 920	1.12	2 670	1.29	3 540	1.44	4 560	1.56	5 720	1.66	7 040	1.73	8 550	1.76
MT028	45	1 460	1.22	2 190	1.43	3 030	1.63	4 000	1.81	5 090	1.98	6 330	2.11	7 720	2.20	9 280	2.25	11 000	2.24
MT032	45	1 550	1.46	2 310	1.68	3 190	1.90	4 230	2.11	5 440	2.31	6 830	2.47	8 420	2.60	10 200	2.69	12 300	2.74
MT036	45	1 960	1.68	2 890	1.90	3 950	2.13	5 150	2.35	6 500	2.56	8 020	2.76	9 710	2.93	11 600	3.07	13 700	3.17
MT040	45	2 050	1.77	3 080	2.08	4 260	2.39	5 590	2.67	7 090	2.93	8 780	3.15	10 700	3.32	12 800	3.42	15 100	3.45
MT044	45	1 920	1.70	2 760	1.97	3 850	2.22	5 210	2.46	6 880	2.68	8 880	2.88	11 200	3.07	14 000	3.23	17 100	3.38
MT050	45	2 170	1.93	3 300	2.31	4 660	2.65	6 290	2.94	8 210	3.20	10 500	3.42	13 000	3.61	16 000	3.77	19 400	3.92
MT056	45	2 680	2.20	3 770	2.55	5 170	2.88	6 910	3.18	9 020	3.46	11 500	3.72	14 500	3.96	17 900	4.18	21 900	4.38
MT064	45	3 140	2.40	4 580	2.85	6 290	3.27	8 310	3.64	10 700	3.98	13 400	4.27	16 600	4.53	20 200	4.76	24 300	4.94
MT072	45	3 240	2.61	4 950	3.20	6 960	3.72	9 340	4.19	12 100	4.60	15 300	4.96	19 000	5.27	23 300	5.54	28 100	5.78
MT080	45	4 230	3.32	6 180	3.89	8 450	4.41	11 100	4.89	14 200	5.33	17 700	5.72	21 700	6.09	26 300	6.42	31 500	6.72
MT100	45	4 570	4.06	6 650	4.66	9 150	5.25	12 100	5.79	15 700	6.27	19 900	6.66	24 700	6.94	30 400	7.09	36 800	7.08
MT125	45	6 690	5.48	9 360	6.17	12 500	6.87	16 400	7.55	20 800	8.18	26 100	8.75	32 200	9.24	39 300	9.63	47 400	9.88
MT144	45	7 700	6.16	10 700	6.94	14 200	7.71	18 500	8.47	23 600	9.17	29 600	9.81	36 600	10.36	44 700	10.80	54 000	11.09
MT160	45	8 660	6.93	11 900	7.79	15 800	8.65	20 600	9.49	26 200	10.28	32 800	11.00	40 500	11.61	49 500	12.10	59 800	12.44
MTM200	45	9 140	8.12	13 300	9.32	18 300	10.49	24 300	11.58	31 400	12.54	39 700	13.32	49 500	13.89	60 700	14.19	73 600	14.17
MTM250	45	13 400	10.95	18 700	12.35	25 100	13.74	32 700	15.09	41 700	16.36	52 200	17.51	64 500	18.49	78 600	19.25	94 800	19.77
MTM288	45	15 400	12.32	21 300	13.87	28 500	15.42	37 000	16.93	47 200	18.35	59 200	19.63	73 200	20.72	89 400	21.59	108 000	22.18
MTM320	45	17 300	13.86	23 800	15.58	31 700	17.30	41 100	18.98	52 300	20.57	65 600	22.00	81 000	23.23	98 900	24.20	119 500	24.88

MTZ R407C

Model	To	-15		-10		-5		0		5		10		15	
	Tc	Qo	Pe	Qo	Pe	Qo	Pe	Qo	Pe	Qo	Pe	Qo	Pe	Qo	Pe
MTZ018	45	1 180	0.82	1 750	0.94	2 430	1.04	3 240	1.13	4 180	1.20	5 270	1.25	6 530	1.30
MTZ022	45	1 770	1.07	2 490	1.24	3 330	1.39	4 320	1.50	5 460	1.60	6 790	1.67	8 310	1.73
MTZ028	45	2 160	1.30	3 110	1.52	4 220	1.72	5 520	1.89	7 030	2.03	8 770	2.13	10 800	2.21
MTZ032	45	2 710	1.50	3 740	1.75	4 940	1.95	6 330	2.12	7 940	2.27	9 800	2.38	11 900	2.48
MTZ036	45	3 270	1.81	4 400	2.10	5 710	2.36	7 200	2.57	8 920	2.73	10 900	2.86	13 100	2.95
MTZ040	45	3 890	2.18	5 150	2.48	6 610	2.74	8 290	2.98	10 200	3.18	12 400	3.35	15 000	3.48
MTZ044	45	3 570	1.97	4 920	2.28	6 590	2.54	8 610	2.76	11 000	2.94	13 800	3.10	17 100	3.24
MTZ050	45	4 200	2.34	5 780	2.70	7 650	3.00	9 860	3.24	12 500	3.45	15 500	3.61	19 000	3.75
MTZ056	45	4 540	2.50	6 310	2.90	8 440	3.24	11 000	3.53	13 900	3.77	17 400	3.98	21 400	4.16
MTZ064	45	5 550	2.91	7 480	3.35	9 820	3.73	12 600	4.05	15 900	4.32	19 800	4.57	24 300	4.79
MTZ072	45	6 300	3.49	8 540	3.96	11 200	4.39	14 400	4.77	18 200	5.11	22 600	5.39	27 700	5.63
MTZ080	45	7 290	4.08	9 860	4.64	12 900	5.12	16 400	5.54	20 600	5.89	25 300	6.19	30 800	6.45
MTZ100	45	7 870	4.81	11 000	5.47	14 800	6.04	19 300	6.52	24 500	6.92	30 700	7.26	37 800	7.56
MTZ125	45	11 500	6.13	15 500	6.97	20 100	7.69	25 600	8.31	31 900	8.84	39 300	9.30	47 700	9.69
MTZ144	45	12 700	7.07	17 000	7.92	22 200	8.70	28 200	9.42	35 300	10.04	43 500	10.58	52 900	11.01
MTZ160	45	15 400	8.21	20 200	9.20	25 800	10.09	32 500	10.91	40 300	11.68	49 400	12.42	59 900	13.16
MTZ200	45	15 700	9.61	22 000	10.94	29 600	12.08	38 600	13.03	49 100	13.84	61 400	14.53	75 500	15.11
MTZ250	45	23 000	12.26	30 900	13.93	40 200	15.37	51 100	16.61	63 800	17.68	78 500	18.59	95 400	19.38
MTZ288	45	25 300	14.13	34 000	15.83	44 400	17.41	56 500	18.83	70 600	20.09	87 000	21.16	105 900	22.02
MTZ320	45	30 700	16.43	40 300	18.39	51 700	20.17	65 100	21.81	80 700	23.36	98 800	24.85	119 700	26.32

Legend: **To:** Evaporating temperature in °C **Tc:** Condensing temperature in °C **Qo:** Cooling capacity in W **Pe:** Power input in kW Superheat = 11.1 K Subcooling = 8.3 K Voltage: 400 V / 3 / 50 Hz

Performance data

MTZ R134a

Model	To	-15		-10		-5		0		5		10		15		20	
	Tc	Qo	Pe	Qo	Pe	Qo	Pe	Qo	Pe	Qo	Pe	Qo	Pe	Qo	Pe	Qo	Pe
MTZ018	45	700	0.61	1 050	0.69	1 470	0.76	1 970	0.82	2 570	0.87	3 270	0.91	4 090	0.93	5 020	0.93
MTZ022	45	940	0.72	1 370	0.81	1 900	0.91	2 550	0.99	3 320	1.06	4 240	1.11	5 310	1.15	6 560	1.16
MTZ028	45	1 230	0.91	1 720	1.02	2 350	1.13	3 130	1.23	4 090	1.34	5 260	1.43	6 650	1.51	8 300	1.58
MTZ032	45	1 430	1.09	2 020	1.25	2 770	1.40	3 690	1.54	4 810	1.66	6 160	1.76	7 760	1.83	9 630	1.86
MTZ036	45	2 050	1.29	2 740	1.45	3 580	1.60	4 590	1.74	5 780	1.86	7 170	1.97	8 790	2.05	10 660	2.10
MTZ040	45	2 450	1.47	3 160	1.61	4 000	1.75	4 980	1.89	6 100	2.01	7 390	2.12	8 860	2.21	10 520	2.27
MTZ044	45	2 080	1.29	2 910	1.49	3 940	1.67	5 190	1.83	6 710	1.95	8 540	2.05	10 710	2.13	13 270	2.17
MTZ050	45	2 360	1.57	3 340	1.80	4 560	2.00	6 040	2.17	7 820	2.31	9 950	2.42	12 470	2.51	15 410	2.57
MTZ056	45	2 290	1.64	3 380	1.88	4 730	2.11	6 400	2.31	8 420	2.49	10 820	2.64	13 650	2.77	16 940	2.86
MTZ064	45	2 700	1.87	4 010	2.17	5 600	2.43	7 510	2.67	9 780	2.87	12 440	3.04	15 550	3.18	19 130	3.27
MTZ072	45	3 200	2.16	4 660	2.50	6 430	2.81	8 560	3.08	11 090	3.33	14 070	3.54	17 540	3.74	21 560	3.92
MTZ080	45	4 130	2.59	5 700	2.93	7 620	3.24	9 950	3.54	12 740	3.80	16 040	4.05	19 920	4.27	24 430	4.48
MTZ100	45	4 660	3.25	6 550	3.65	8 860	4.02	11 680	4.35	15 050	4.63	19 050	4.84	23 730	4.96	29 170	4.98
MTZ125	45	5 870	3.63	8 230	4.17	11 090	4.69	14 520	5.16	18 590	5.57	23 380	5.89	28 950	6.09	35 380	6.18
MTZ144	45	7 880	4.85	10 680	5.40	14 060	5.94	18 090	6.46	22 850	6.93	28 420	7.34	34 870	7.67	42 290	7.92
MTZ160	45	8 770	5.23	11 800	5.84	15 470	6.45	19 890	7.06	25 130	7.65	31 300	8.21	38 480	8.72	46 760	9.18
MTZ200	45	9 320	6.50	13 090	7.29	17 730	8.04	23 350	8.70	30 100	9.26	38 090	9.68	47 460	9.92	58 340	9.96
MTZ250	45	11 740	7.25	16 460	8.35	22 180	9.39	29 040	10.33	37 190	11.14	46 760	11.77	57 910	12.19	70 770	12.35
MTZ288	45	15 750	9.71	21 370	10.81	28 130	11.89	36 190	12.91	45 710	13.85	56 840	14.67	69 750	15.35	84 580	15.84
MTZ320	45	17 540	10.46	23 600	11.67	30 950	12.90	39 780	14.11	50 260	15.29	62 590	16.41	76 950	17.44	93 530	18.37

MTZ R404A / R507A

Model	To	-30		-25		-20		-15		-10		-5		0		5		10	
	Tc	Qo	Pe	Qo	Pe	Qo	Pe	Qo	Pe	Qo	Pe	Qo	Pe	Qo	Pe	Qo	Pe	Qo	Pe
MTZ018	45	390	0.69	650	0.83	980	0.96	1 400	1.09	1 900	1.21	2 520	1.31	3 250	1.40	4 110	1.47	5 120	1.53
MTZ022	45	640	0.86	980	1.03	1 410	1.19	1 960	1.34	2 620	1.48	3 440	1.61	4 410	1.72	5 550	1.82	6 880	1.90
MTZ028	45	760	1.05	1 250	1.30	1 850	1.53	2 570	1.75	3 430	1.96	4 450	2.14	5 640	2.31	7 040	2.45	8 640	2.56
MTZ032	45	1 040	1.20	1 580	1.46	2 240	1.71	3 030	1.94	3 980	2.16	5 110	2.36	6 440	2.55	7 980	2.71	9 760	2.86
MTZ036	45	1 300	1.50	1 930	1.78	2 690	2.06	3 600	2.33	4 670	2.58	5 930	2.81	7 400	3.01	9 100	3.19	11 050	3.34
MTZ040	45	1 600	1.70	2 320	2.05	3 160	2.37	4 160	2.67	5 330	2.95	6 700	3.20	8 290	3.44	10 130	3.65	12 230	3.84
MTZ044	45	1 360	1.60	2 100	1.94	2 990	2.25	4 070	2.52	5 370	2.77	6 910	3.00	8 740	3.20	10 890	3.38	13 370	3.54
MTZ050	45	1 700	1.94	2 500	2.29	3 510	2.62	4 750	2.93	6 260	3.22	8 070	3.48	10 220	3.71	12 740	3.91	15 680	4.07
MTZ056	45	1 730	2.04	2 620	2.43	3 710	2.81	5 060	3.17	6 710	3.51	8 690	3.83	11 060	4.11	13 840	4.36	17 090	4.57
MTZ064	45	2 160	2.32	3 200	2.83	4 480	3.32	6 060	3.78	7 980	4.20	10 300	4.60	13 070	4.96	16 330	5.28	20 150	5.55
MTZ072	45	2 550	2.74	3 670	3.25	5 080	3.75	6 810	4.23	8 920	4.69	11 450	5.11	14 450	5.51	17 970	5.87	22 050	6.19
MTZ080	45	3 170	3.15	4 530	3.85	6 170	4.48	8 130	5.07	10 470	5.61	13 230	6.11	16 470	6.57	20 240	7.01	24 580	7.41
MTZ100	45	3 240	4.01	4 930	4.80	6 960	5.53	9 390	6.18	12 280	6.76	15 700	7.26	19 710	7.70	24 370	8.06	29 760	8.34
MTZ125	45	4 660	5.16	6 620	6.02	9 060	6.86	12 060	7.67	15 710	8.44	20 080	9.16	25 250	9.83	31 300	10.44	38 310	10.98
MTZ144	45	5 700	6.08	8 060	7.05	10 920	8.00	14 370	8.91	18 490	9.78	23 380	10.60	29 110	11.36	35 770	12.06	43 450	12.69
MTZ160	45	6 280	6.80	8 870	7.95	12 010	9.04	15 790	10.08	20 310	11.08	25 640	12.05	31 900	13.01	39 160	13.97	47 540	14.95
MTZ200	45	6 480	8.02	9 860	9.60	13 920	11.05	18 770	12.36	24 560	13.52	31 400	14.53	39 420	15.39	48 750	16.11	59 510	16.68
MTZ250	45	9 320	10.32	13 230	12.05	18 110	13.73	24 120	15.34	31 420	16.88	40 160	18.32	50 500	19.66	62 600	20.88	76 620	21.96
MTZ288	45	11 410	12.17	16 120	14.11	21 840	16.00	28 740	17.82	36 990	19.56	46 760	21.20	58 220	22.72	71 550	24.12	86 900	25.37
MTZ320	45	12 550	13.61	17 740	15.90	24 030	18.08	31 590	20.15	40 610	22.15	51 280	24.10	63 790	26.03	78 330	27.95	95 070	29.90

Legend:
To: Evaporating temperature in °C
Tc: Condensing temperature in °C
Qo: Cooling capacity in W
Pe: Power input in kW
Superheat = 10 K
Subcooling = 0 K
Voltage: 400 V / 3 / 50 Hz

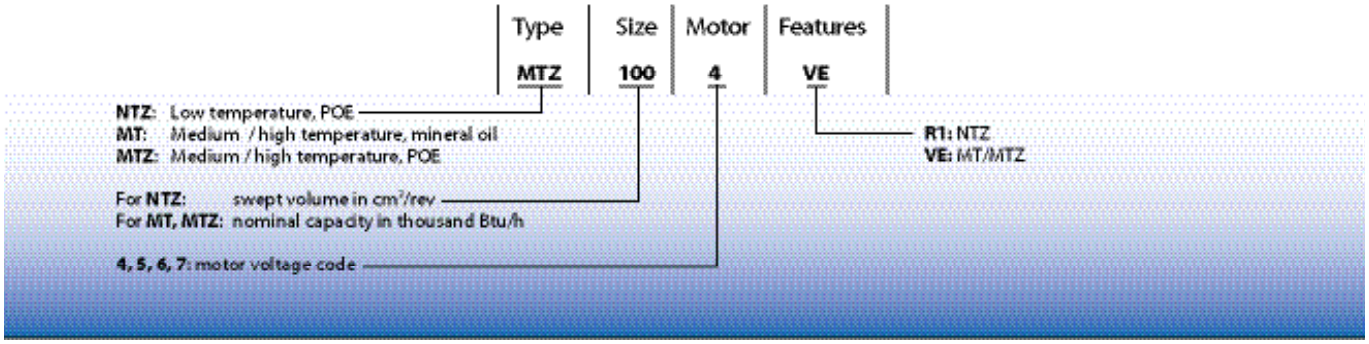

Reciprocating compressors – Commercial

	Model	4 460/3/60 400/3/50	5 230/1/50	6 230/3/50	7 575/3/60 500/3/50	Swept volume cm^3/rev	Displacement m^3/h at 2900 rpm	Cylinder number	Oil charge dm^3	Net weight kg
Low back pressure Applications	NTZ048	120F0001	120F0087			48	8.4	1	0.95	21
	NTZ068	120F0002	120F0088			68	11.8	1	0.95	23
	NTZ096	120F0003				96	16.7	2	1.8	35
	NTZ108	120F0004				108	18.7	2	1.8	35
	NTZ136	120F0005				136	23.6	2	1.8	35
	NTZ215	120F0006				215	37.5	4	3.9	62
	NTZ271	120F0007				271	47.3	4	3.9	64
	NTZ430	120F0024				2 x 215	2 x 37.5	2 x 4	2 x 3.9	138
	NTZ542	120F0025				2 x 271	2 x 47.3	2 x 4	2 x 2.9	142
Medium -High back pressure Applications	MT018	MT18-4VI	MT18-5VI			30	5.3	1	0.95	21
	MT022	MT22-4VI	MT22-5VI	MT22-6VI		38	6.6	1	0.95	21
	MT028	MT28-4VI	MT28-5VI	MT28-6VI		48	8.4	1	0.95	23
	MT032	MT32-4VI	MT32-5VI	MT32-6VI		54	9.4	1	0.95	24
	MT036	MT36-4VI	MT36-5VI	MT36-6VI		60	10.5	1	0.95	25
	MT040	MT40-4VI		MT40-6VI		68	11.8	1	0.95	26
	MT044	MT44-4VI		MT44-6VI	MT44-7VI	76	13.3	2	1.8	35
	MT050	MT50-4VI	MT50-5VI	MT50-6VI	MT50-7VI	86	14.9	2	1.8	35
	MT056	MT56-4VI		MT56-6VI	MT56-7VI	96	16.7	2	1.8	37
	MT064	MT64-4VI		MT64-6VI		108	18.7	2	1.8	37
	MT072	MT72-4VI		MT72-6VI		121	21.0	2	1.8	40
	MT080	MT80-4VI		MT80-6VI		136	23.6	2	1.8	40
	MT100	MT100-4VI		MT100-6VI	MT100-7VI	171	29.8	4	3.9	60
	MT125	MT125-4VI		MT125-6VI	MT125-7VI	215	37.5	4	3.9	64
	MT144	MT144-4VI		MT144-6VI	MT144-7VI	242	42.1	4	3.9	67
	MT160	MT160-4VI		MT160-6VI	MT160-7VI	272	47.3	4	3.9	69
	MTM200	MTM200T4SA		MTM200T6SA		2 x 171	2 x 29.8	2 x 4	2 x 3.9	134
	MTM250	MTM250T4SA		MTM250T6SA		2 x 215	2 x 37.5	2 x 4	2 x 3.9	142
	MTM288	MTM288T4SA		MTM288T6SA		2 x 242	2 x 42.1	2 x 4	2 x 3.9	148
	MTM320	MTM320T4SA		MTM320T6SA		2 x 272	2 x 47.3	2 x 4	2 x 3.9	152
	MTZ018	MTZ18-4VI	MTZ18-5VI	MTZ18-6VI		30	5.3	1	0.95	21
	MTZ022	MTZ22-4VI	MTZ22-5VI	MTZ22-6VI		38	6.6	1	0.95	21
	MTZ028	MTZ28-4VI	MTZ28-5VI	MTZ28-6VI		48	8.4	1	0.95	23
	MTZ032	MTZ32-4VI	MTZ32-5VI	MTZ32-6VI	MTZ32-7VI	54	9.4	1	0.95	24
	MTZ036	MTZ36-4VI	MTZ36-5VI	MTZ36-6VI	MTZ36-7VI	60	10.5	1	0.95	25
	MTZ040	MTZ40-4VI		MTZ40-6VI		68	11.8	1	0.95	26
	MTZ044	MTZ44-4VI		MTZ44-6VI	MTZ44-7VI	76	13.3	2	1.8	35
	MTZ050	MTZ50-4VI	MTZ50-5VI	MTZ50-6VI	MTZ50-7VI	86	14.9	2	1.8	35
	MTZ056	MTZ56-4VI		MTZ56-6VI	MTZ56-7VI	96	16.7	2	1.8	37
	MTZ064	MTZ64-4VI		MTZ64-6VI		108	18.7	2	1.8	37
	MTZ072	MTZ72-4VI		MTZ72-6VI		121	21.0	2	1.8	40
	MTZ080	MTZ80-4VI		MTZ80-6VI		136	23.6	2	1.8	40
	MTZ100	MTZ100-4VI		MTZ100-6VI	MTZ100-7VI	171	29.8	4	3.9	60
	MTZ125	MTZ125-4VI		MTZ125-6VI	MTZ125-7VI	215	37.5	4	3.9	64
	MTZ144	MTZ144-4VI		MTZ144-6VI	MTZ144-7VI	242	42.1	4	3.9	67
	MTZ160	MTZ160-4VI		MTZ160-6VI	MTZ160-7VI	272	47.3	4	3.9	69
	MTZ200	MTZ200T4SA		MTZ200T6SA		2 x 171	2 x 29.8	2 x 4	2 x 3.9	134
	MTZ250	MTZ250T4SA		MTZ250T6SA		2 x 215	2 x 37.5	2 x 4	2 x 3.9	142
	MTZ288	MTZ288T4SA		MTZ288T6SA		2 x 242	2 x 42.1	2 x 4	2 x 3.9	148
	MTZ320	MTZ320T4SA		MTZ320T6SA		2 x 272	2 x 47.3	2 x 4	2 x 3.9	152

Dimensions

MT / MTZ / NTZ
1 cylinder

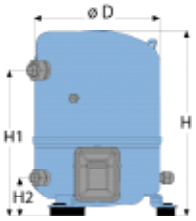

D : 224 mm
H : 333/358 mm
H1 : 263 mm
H2 : 68 mm

MT / MTZ / NTZ
2 cylinders

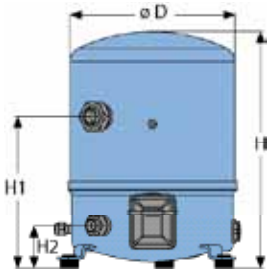

D : 288 mm
H : 413 mm
H1 : 265 mm
H2 : 74 mm

MT / MTZ / NTZ
4 cylinders

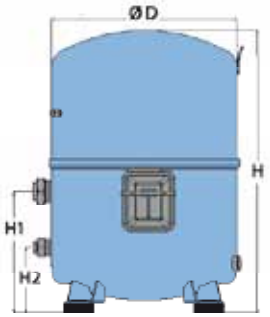

D : 352 mm
H : 519 / 540mm
H1 : 233 mm
H2 : 125 mm

MT / MTZ / NTZ Tandem
2 x 4 cylinders

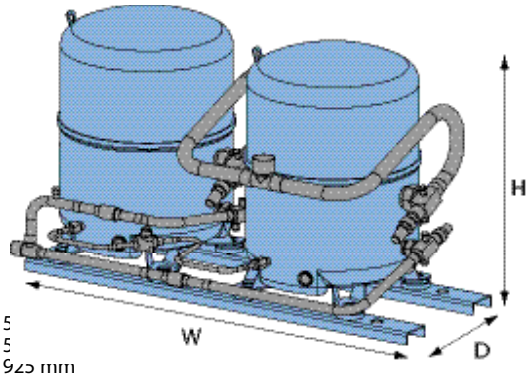

H : 5
D : 5
W : 925 mm

Scroll compressors – H series

Dimensions

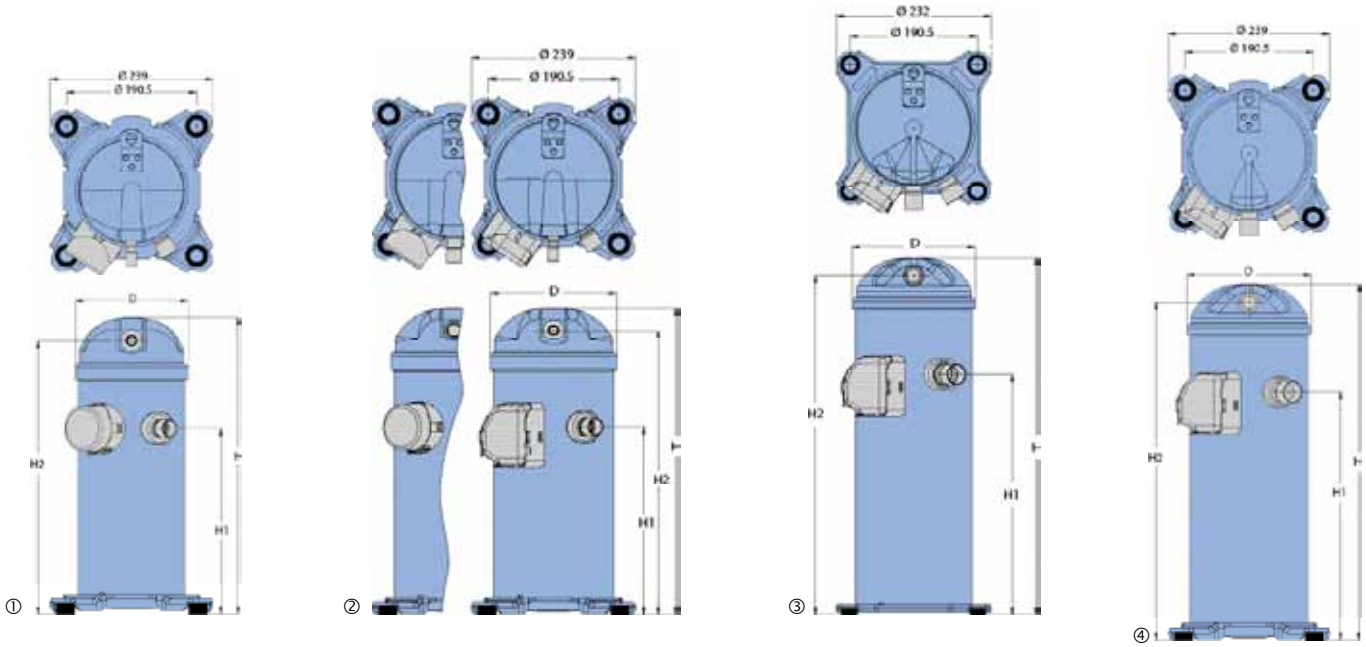

Outline	R22	R407C	R410A	D	H	H1	H2
①	HRM032-034-038-040-042	HRP034-038-040-042	HRH029-031-032-034-036-038	165	413	250	379
①	HRM045-047	HRP045-047	HRH040	165	439	275	405
②	HRM048-051-054-058-060-HLM068-072-075-078-081	HRP048-051-054-058-060-HLP068-072-075-081	HRH041-044-049-051-054-056-HLH061-068-072-083	184	455	280	422
③	HCM094	HCP094		184	536	369	509
③	HCM109-120	HCP109-120		184	545	369	519
④			HCJ090-105-120	184	537	377	510

All dimensions in mm

Nomenclature

Type	Size	Motor	Features
HRH	036	U1L	P6

Application:
H: high temperature / air conditioning

Family:
C: light commercial scroll
R: residential scroll (new platform)
L: light commercial scroll (new platform)

Refrigerant & lubricant:
M: R22/R417A, alkylbenzene lubricant*
P: R407C, PVE lubricant
H: R410A, PVE lubricant
J: R410A, PVE lubricant

Nominal capacity:
In thousand Btu/h at 60 Hz,
ARI conditions

Model variation
T: design optimized for 7.2/54.4°C
U: design optimized for 7.2/37.8°C

Other features

	Oil sight glass	Oil equalisation	Oil drain	LP gauge port	Gas equalisation port
6	None	None	None	None	None
7	Threaded	None	None	None	None
8	None	Brazed	None	None	Brazed

Tubing and electrical connections
P: brazed connections, spade terminals
C: brazed connections, screw terminals

Motor protection
L: internal motor protection

Motor voltage code
1: 208-230 V/1–/60 Hz
2: 200-220 V/3–/50Hz & 208-230 V/3–/60 Hz
4: 380-400 V/3–/50 Hz & 460 V/3–/60 Hz
5: 220-240 V/1–/50 Hz
7: 500 V/3–/50 Hz & 575 V/ 3–/60 Hz
9: 380 V/3–/60 Hz

* When HPM compressors are used with R417A, the factory charged oil must be replaced by PVE oil 320HV (12025034)

Scroll compressors R407C · HRP/HLP/HCP

	Te	-25	-25	-20	-20	-15	-15	-10	-10	-5	-5	0	0	5	5	10	10
	Tc	Cooling (W)	Pe (kW)	Cooling (W)	Pe (kW)	Cooling (W)	Pe (kW)	Cooling (W)	Pe (kW)	Cooling (W)	Pe (kW)	Cooling (W)	Pe (kW)	Cooling (W)	Pe (kW)	Cooling (W)	Pe (kW)
HRP025T4	35	1900	1.11	2400	1.15	3000	1.18	3700	1.21	4600	1.24	5500	1.26	6500	1.29	7600	1.32
	45	-	-	2100	1.38	2700	1.43	3400	1.47	4100	1.51	4900	1.53	5900	1.55	6900	1.57
	55	-	-	-	-	-	-	3000	1.76	3700	1.81	4400	1.85	5300	1.88	6200	1.89
HRP034T4	35	2500	1.73	3200	1.71	4100	1.70	5100	1.69	6300	1.68	7700	1.67	9300	1.64	11200	1.59
	45	-	-	2800	2.19	3500	2.18	4500	2.16	5600	2.15	6800	2.14	8300	2.12	10000	2.08
	55	-	-	-	-	-	-	3800	2.77	4800	2.76	5900	2.75	7200	2.73	8700	2.71
HRP038T4	35	2700	1.85	3500	1.83	4400	1.82	5500	1.82	6900	1.80	8400	1.79	10200	1.76	12200	1.71
	45	-	-	3100	2.32	3900	2.31	4900	2.30	6100	2.29	7500	2.27	9100	2.25	11000	2.21
	55	-	-	-	-	-	-	4200	2.91	5300	2.90	6600	2.89	8000	2.87	9700	2.84
HRP040T4	35	2900	2.03	3700	2.01	4700	2.00	5800	1.99	7200	1.97	8900	1.95	10700	1.92	12900	1.87
	45	-	-	3200	2.57	4100	2.55	5100	2.54	6400	2.52	7800	2.51	9500	2.48	11500	2.44
	55	-	-	-	-	-	-	4300	3.24	5500	3.23	6800	3.22	8300	3.20	10000	3.17
HRP042T4	35	3000	2.13	3900	2.11	4900	2.10	6100	2.09	7600	2.08	9300	2.06	11300	2.02	13600	1.97
	45	-	-	3300	2.70	4300	2.68	5400	2.67	6700	2.65	8300	2.64	10000	2.61	12100	2.56
	55	-	-	-	-	-	-	4600	3.41	5700	3.40	7100	3.38	8700	3.36	10500	3.33
HRP045T4	35	3300	2.19	4200	2.16	5300	2.15	6700	2.14	8300	2.13	10100	2.11	12300	2.07	14700	2.01
	45	-	-	3700	2.86	4700	2.83	6000	2.81	7400	2.80	9100	2.78	11100	2.75	13400	2.70
	55	-	-	-	-	-	-	5200	3.70	6500	3.69	8000	3.68	9800	3.66	11900	3.62
HRP047T4	35	3400	2.30	4400	2.28	5600	2.26	7000	2.25	8700	2.24	10600	2.22	12900	2.18	15500	2.12
	45	-	-	3900	2.97	4900	2.94	6200	2.93	7700	2.91	9500	2.89	11600	2.86	13900	2.81
	55	-	-	-	-	-	-	5300	3.81	6700	3.80	8300	3.78	10100	3.76	12300	3.73
HRP048T4	35	3500	2.39	4400	2.38	5600	2.37	7100	2.36	8800	2.35	10700	2.32	13000	2.28	15600	2.23
	45	-	-	3900	2.88	4900	2.87	6200	2.86	7800	2.85	9500	2.83	11600	2.80	14000	2.75
	55	-	-	-	-	-	-	5300	3.44	6700	3.44	8200	3.42	10100	3.40	12200	3.37
HRP051T4	35	3700	2.33	4800	2.36	6100	2.39	7600	2.42	9400	2.46	11500	2.50	14000	2.54	16800	2.60
	45	-	-	4200	3.18	5400	3.15	6800	3.13	8400	3.12	10300	3.11	12600	3.11	15100	3.12
	55	-	-	-	-	-	-	5800	4.00	7300	3.95	9000	3.91	11000	3.89	13400	3.87
HRP054T4	35	3900	2.44	5000	2.46	6400	2.50	8000	2.53	9800	2.57	12100	2.61	14600	2.66	17600	2.72
	45	-	-	4400	3.32	5600	3.29	7000	3.26	8700	3.25	10800	3.24	13100	3.24	15800	3.25
	55	-	-	-	-	-	-	6100	4.15	7600	4.10	9400	4.06	11400	4.03	13800	4.01
HRP058T4	35	4200	2.61	5400	2.64	6800	2.68	8500	2.71	10600	2.75	12900	2.80	15700	2.85	18800	2.91
	45	-	-	4700	3.56	6000	3.52	7500	3.50	9400	3.48	11500	3.47	14000	3.48	16900	3.49
	55	-	-	-	-	-	-	6500	4.45	8100	4.39	10000	4.35	12300	4.32	14800	4.30
HRP060T4	35	4300	2.71	5600	2.74	7000	2.78	8800	2.81	10900	2.85	13400	2.90	16200	2.95	19500	3.02
	45	-	-	4800	3.65	6200	3.61	7800	3.58	9700	3.55	11900	3.54	14500	3.54	17400	3.56
	55	-	-	-	-	-	-	6700	4.50	8400	4.42	10300	4.36	12600	4.32	15300	4.31
HLP068T4	35	5300	3.37	6800	3.42	8600	3.46	10800	3.50	13300	3.55	16300	3.60	19800	3.67	23900	3.77
	45	-	-	5800	4.50	7400	4.44	9200	4.38	11400	4.34	14000	4.32	17100	4.33	20600	4.36
	55	-	-	-	-	-	-	7800	5.43	9500	5.31	11700	5.22	14200	5.16	17300	5.15
HLP072T4	35	5600	3.57	7200	3.66	9100	3.71	11300	3.75	14000	3.78	17200	3.83	20800	3.89	25000	4.00
	45	-	-	6100	4.83	7800	4.73	9700	4.64	12000	4.58	14800	4.55	18000	4.57	21700	4.65
	55	-	-	-	-	-	-	8200	5.76	10100	5.56	12400	5.42	15100	5.35	18300	5.37
HLP075T4	35	5500	3.84	7100	3.81	9000	3.80	11300	3.78	14000	3.76	17200	3.72	20800	3.65	25000	3.56
	45	-	-	6300	4.69	8000	4.67	10100	4.65	12500	4.63	15400	4.60	18700	4.55	22500	4.47
	55	-	-	-	-	-	-	8600	5.70	10800	5.69	13400	5.67	16400	5.64	19900	5.58
HLP081T4	35	5700	4.16	7300	4.15	9300	4.13	11600	4.11	14400	4.07	17700	4.02	21400	3.95	25700	3.85
	45	-	-	6600	5.13	8400	5.10	10600	5.07	13200	5.03	16200	4.99	19700	4.92	23700	4.84
	55	-	-	-	-	-	-	9300	6.26	11700	6.21	14500	6.16	17800	6.10	21500	6.02
HCP094T4	35	6600	4.61	8500	4.59	10800	4.57	13500	4.55	16700	4.52	20400	4.47	24800	4.40	29800	4.29
	45	-	-	7500	5.63	9500	5.61	12000	5.58	14900	5.56	18300	5.52	22300	5.46	26900	5.37
	55	-	-	-	-	-	-	10300	6.83	13000	6.81	16000	6.78	19600	6.74	23800	6.68
HCP109T4	35	8100	4.80	10200	4.93	13000	5.02	16400	5.09	20300	5.15	24700	5.21	29500	5.26	34800	5.32
	45	-	-	9300	6.01	11500	6.19	14400	6.31	18000	6.39	22200	6.42	26900	6.43	32100	6.41
	55	-	-	-	-	-	-	12600	7.84	15600	7.98	19300	8.05	23700	8.06	28700	8.01
HCP120T4	35	9000	5.49	11300	5.64	14400	5.75	18100	5.81	22300	5.86	27200	5.91	32500	5.98	38400	6.07
	45	-	-	10300	6.85	12600	7.03	15800	7.14	19600	7.21	24200	7.24	29400	7.26	35200	7.28
	55	-	-	-	-	-	-	13700	8.82	16800	8.94	20800	8.99	25600	9.01	31000	8.99

To: Evaporating temperature in °C
Tc: Condensing temperature in °C
Qo: Cooling capacity in W
Pe: Power input in kW
Superheat = 11.1 K
Subcooling = 8.3 K
Voltage: 400 V / 3 / 50 Hz
***:** Voltage: 220-240 V / 1 / 50 Hz

Product range single compressors – Air Conditioning Performer® scroll compressors S series

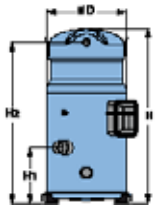

	D	H	H1	H2
S084-090-100	254	508	142	465
S110-120	254	558	178	515

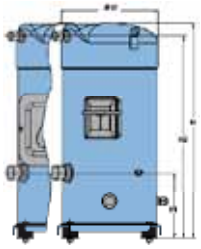

	D	H	H1	H2
S148-161	266	591	180	556

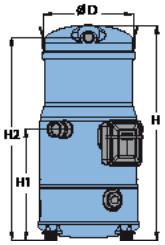

	D	H	H1	H2
S112	243	535	278	504
S124-147	243	540	278	509

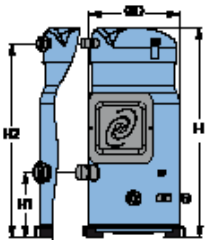

	D	H	H1	H2
S115-125	254	581	180	537
S160	266	631	180	596
S175-185	316	678	180	641

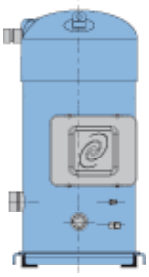

	D	H	H1	H2
S240	344	727	196	654
S300	344	738	196	665
S380	344	762	196	689

All dimensions in mm

Model	Motor voltage code		
	400 V/3/50Hz - 460V/3/60Hz	230/3/50	500/3/50 - 575/3/60
	4	6	7
SM/SZ084-090-100-110-120	●	●	●
SM/SZ148-161	●	●	●
SM112-124-147	●		
SM/SZ115-125-160-175-185	○ ●	○ ●	○ ●
SY185	○ ●		
SY/SZ240-300	○ ●	○ ●	○ ●
SY/SZ380 *	●		

○ Rotolock version ● Brazed version * SY380 only available for 400/3/50Hz

Family, lubricant & refrigerant	Nominal capacity		Voltage	Version	Evolution index	
SZ SY	185 300	- A	4 7	R CA	C A	Single compressors Single compressors

Family, lubricant & refrigerant
SM: Scroll, Mineral oil, R22/R417A**
SY: Scroll, POE lubricant, R22/R417A (and R407C for SY185-240-300)
SZ: Scroll, POE lubricant, R407C - R134a (and R404A, R507A for SZ084 to SZ185)

Nominal capacity
in thousand Btu/h at 60 Hz, R22, ARI conditions

Motor voltage code
3: 200-230V/3~/60 Hz
4: 380-400V/3~/50 - 460V/3~/60 Hz
6: 230V/3~/50 Hz
7: 500V/3~/50 Hz - 575V/3~/60 Hz
9: 380V/3~/60 Hz

Motor protection type		Connection	Module voltage	Applies to
Internal overload protector	V	: brazed		S 084-090-100-110-120-148-161
	A	: brazed		S 112-124-147
Internal thermostat	C	: brazed		S 115-125-160-175-185
	R	: rotolock		
Electronic protection module	P	: brazed	24 V AC	
	X	: brazed	230 V	
	S	: rotolock	24 V AC	
	Y	: rotolock	230 V	
	CA	C: brazed	A: 24V AC	S 240 - 300
	CB		B: 115/230V	
	PA	P: rotolock	A: 24V AC	
	PB		B: 115/230V	
	CA	C: brazed	A: 24V AC	S 380 *
	CB		B: 115/230V	

* SY380 only available for 400V/3~/50 Hz, SZ380 available for both 400V/3~/50 Hz and 460V/3~/60 Hz
** When SM compressors are used with R417A, the factory charged mineral oil 160P must be replaced by polyolester oil 160SZ

Scroll compressors SM / SY R22

Model	To	-20		-15		-10		-5		0		5		10		15	
	Tc	Qo	Pe	Qo	Pe	Qo	Pe	Qo	Pe	Qo	Pe	Qo	Pe	Qo	Pe	Qo	Pe
SM084	35	7 700	4.0	9 900	4.0	12 500	4.0	15 500	4.0	18 900	4.0	22 800	4.0	27 200	3.9	32 100	3.9
	55	-	-	-	-	-	-	12 000	6.4	15 000	6.3	18 500	6.2	22 500	6.2	26 900	6.1
SM090	35	8 600	4.3	10 900	4.4	13 600	4.4	16 700	4.4	20 200	4.4	24 300	4.4	28 900	4.4	34 100	4.4
	55	-	-	-	-	-	-	13 300	6.7	16 400	6.7	19 900	6.6	23 900	6.6	28 400	6.5
SM100	35	9 000	4.6	11 500	4.6	14 400	4.7	17 700	4.7	21 500	4.7	25 800	4.7	30 700	4.7	36 200	4.7
	55	-	-	-	-	-	-	14 200	7.1	17 400	7.1	21 200	7.1	25 400	7.0	30 200	7.0
SM110	35	10 200	5.2	13 000	5.2	16 200	5.2	20 000	5.2	24 200	5.2	29 000	5.2	34 400	5.2	40 400	5.2
	55	-	-	-	-	-	-	15 900	8.0	19 600	8.0	23 800	7.9	28 400	7.9	33 700	7.8
SM112	35	11 300	5.1	14 100	5.1	17 400	5.2	21 200	5.3	25 500	5.4	30 500	5.5	36 100	5.6	42 500	5.7
	55	-	-	-	-	-	-	17 500	7.8	21 200	7.9	25 400	8.0	30 200	8.1	35 700	8.2
SM115	35	11 200	5.4	13 900	5.4	17 100	5.4	20 800	5.5	25 100	5.5	30 000	5.4	35 600	5.4	41 800	5.4
	55	-	-	-	-	-	-	16 500	8.6	20 700	8.5	25 500	8.5	31 000	8.4	37 100	8.3
SM120	35	11 800	6.0	15 200	6.0	19 000	6.0	23 300	5.9	28 200	5.9	33 700	5.9	39 900	5.9	46 700	5.9
	55	-	-	-	-	-	-	18 600	9.2	22 800	9.2	27 600	9.1	33 000	9.0	38 900	9.0
SM124	35	13 100	5.4	16 200	5.5	19 800	5.7	23 900	5.8	28 700	6.0	34 100	6.1	40 300	6.2	47 200	6.4
	55	-	-	-	-	-	-	19 800	8.4	24 000	8.6	28 700	8.8	34 100	9.0	40 200	9.2
SM125	35	12 000	5.8	15 000	5.8	18 400	5.9	22 400	5.9	27 000	5.9	32 300	5.9	38 200	5.8	45 000	5.8
	55	-	-	-	-	-	-	17 700	9.3	22 300	9.2	27 400	9.1	33 300	9.0	39 900	8.9
SM147	35	14 900	6.3	18 600	6.4	22 900	6.5	27 800	6.7	33 500	6.9	40 000	7.1	47 300	7.2	55 600	7.4
	55	-	-	-	-	-	-	22 700	9.8	27 500	9.9	33 100	10.1	39 400	10.3	46 600	10.5
SM148	35	14 800	7.0	18 500	7.0	22 900	7.1	27 800	7.1	33 600	7.2	40 100	7.2	47 500	7.3	55 900	7.3
	55	-	-	-	-	-	-	22 600	10.9	27 500	10.9	33 100	10.9	39 500	11.0	46 800	11.0
SM160	35	15 500	7.6	19 600	7.7	24 300	7.8	29 700	7.9	35 900	8.0	43 000	8.1	50 900	8.1	59 800	8.2
	55	-	-	-	-	-	11.5	24 100	11.6	29 600	11.6	35 800	11.7	42 900	11.8	50 800	11.8
SM161	35	16 000	7.5	20 100	7.6	24 700	7.6	30 100	7.6	36 300	7.7	43 400	7.7	51 400	7.8	60 500	7.8
	55	-	-	-	-	-	-	24 400	11.7	29 700	11.7	35 800	11.7	42 800	11.8	50 600	11.8
SM175	35	17 000	8.1	21 300	8.1	26 400	8.2	32 300	8.3	39 000	8.4	46 600	8.4	55 200	8.5	64 800	8.5
	55	-	-	-	-	-	-	26 200	12.4	32 000	12.5	38 500	12.6	46 000	12.6	54 400	12.7
SM185	35	18 400	8.8	23 100	8.9	28 600	9.0	35 000	9.1	42 200	9.1	50 500	9.2	59 800	9.3	70 200	9.3
	55	-	-	-	-	-	13.5	28 400	13.6	34 600	13.7	41 800	13.8	49 800	13.8	58 900	13.9
SY185	35	17 600	8.7	22 500	8.7	28 100	8.7	34 500	8.8	42 000	8.9	50 400	9.0	60 000	9.1	70 900	9.2
	55	-	-	-	-	-	13.3	28 600	13.3	34 800	13.3	41 900	13.4	49 800	13.5	58 600	13.7
SY240	35	25 100	11.7	31 400	11.8	38 800	12.0	47 300	12.1	57 100	12.4	68 300	12.6	81 000	13.0	95 300	13.3
	55	-	-	-	-	-	-	38 400	17.8	46 600	18.0	56 100	18.3	67 000	18.6	79 300	18.9
SY300	35	31 900	14.2	39 900	14.5	49 300	14.8	60 300	15.1	73 100	15.6	87 900	16.1	104 800	16.7	124 100	17.4
	55	-	-	-	-	-	-	48 600	22.0	59 200	22.4	71 600	22.8	85 900	23.4	102 300	24.1
SY380	35	40 100	17.3	49 500	17.6	60 500	18.0	73 300	18.4	88 100	18.8	104 900	19.2	124 100	19.8	145 800	20.4
	55	-	-	-	-	-	-	59 700	26.8	72 300	27.1	86 800	27.5	103 400	27.9	122 300	28.4
SM170	35	15 200	8.0	19 500	8.0	24 600	8.0	30 500	8.0	37 200	8.0	44 900	7.9	53 500	7.9	63 200	7.8
	55	-	-	-	-	-	-	23 600	12.7	29 600	12.6	36 500	12.5	44 300	12.3	53 100	12.1
SM180	35	16 900	8.6	21 400	8.7	26 700	8.8	32 800	8.8	39 900	8.8	47 900	8.8	56 900	8.8	67 100	8.7
	55	-	-	-	-	-	-	26 200	13.4	32 300	13.3	39 300	13.3	47 100	13.2	56 000	13.1
SM200	35	17 700	9.2	22 600	9.3	28 300	9.3	34 800	9.3	42 300	9.4	50 900	9.4	60 500	9.4	71 300	9.4
	55	-	-	-	-	-	-	27 900	14.3	34 400	14.2	41 700	14.1	50 000	14.0	59 400	13.9
SM220	35	20 000	10.4	25 500	10.4	32 000	10.4	39 300	10.4	47 700	10.5	57 100	10.5	67 700	10.4	79 500	10.4
	55	-	-	-	-	-	-	31 400	16.0	38 600	16.0	46 800	15.9	56 000	15.8	66 300	15.6
SM230	35	22 000	10.8	27 400	10.9	33 700	10.9	41 000	10.9	49 500	10.9	59 100	10.9	70 100	10.9	82 400	10.8
	55	-	-	-	-	-	-	32 500	17.2	40 800	17.1	50 200	16.9	61 000	16.7	73 100	16.5
SM242	35	23 300	12.0	29 900	11.9	37 400	11.9	45 900	11.9	55 600	11.9	66 400	11.9	78 500	11.8	92 000	11.8
	55	-	-	-	-	-	-	36 600	18.4	45 000	18.3	54 400	18.2	64 900	18.1	76 600	17.9
SM248	35	26 300	10.9	32 500	11.1	39 600	11.3	47 900	11.6	57 400	11.9	68 200	12.2	80 500	12.5	94 400	12.7
	55	-	-	-	-	-	-	39 700	16.9	47 900	17.2	57 400	17.5	68 100	17.9	80 300	18.4
SM250	35	23 700	11.6	29 500	11.7	36 200	11.7	44 100	11.7	53 200	11.7	63 500	11.7	75 300	11.7	88 600	11.6
	55	-	-	-	-	-	-	35 000	18.5	43 800	18.4	54 000	18.2	65 600	18.0	78 600	17.7
SM268	35	26 600	13.0	33 700	13.0	41 800	13.0	51 100	13.1	61 700	13.1	73 700	13.2	87 300	13.2	102 400	13.2
	55	-	-	-	-	-	-	40 700	20.1	49 800	20.1	60 100	20.0	71 700	20.0	84 800	20.0
SM271	35	25 800	12.7	32 500	12.8	40 300	12.8	49 300	12.9	59 600	12.9	71 300	13.0	84 500	13.0	99 300	13.0
	55	-	-	-	-	-	-	39 700	19.7	48 600	19.7	58 700	19.7	70 100	19.6	83 000	19.6
SM272	35	28 000	11.7	34 800	11.9	42 600	12.2	51 700	12.5	62 100	12.8	73 900	13.2	87 400	13.5	102 600	13.8
	55	-	-	-	-	-	-	41 700	18.3	50 500	18.5	60 600	18.9	72 100	19.3	85 200	19.7
SM281	35	27 500	13.5	34 700	13.5	43 000	13.6	52 600	13.6	63 600	13.6	75 900	13.7	89 900	13.7	105 500	13.7
	55	-	-	-	-	-	-	42 300	20.9	51 800	20.9	62 500	20.8	74 600	20.8	88 200	20.8
SM285	35	27 100	13.4	34 000	13.5	42 100	13.6	51 400	13.7	62 000	13.8	74 100	13.9	87 800	14.0	103 200	14.1
	55	-	-	-	-	-	-	41 200	20.8	51 100	20.8	62 300	20.8	75 000	20.8	89 300	20.7
SM290	35	27 700	13.5	34 700	13.6	42 900	13.7	52 300	13.8	63 100	13.8	75 400	13.9	89 400	13.9	105 100	13.9
	55	-	-	-	-	-	-	42 000	21.0	51 900	21.1	63 100	21.1	75 800	21.0	90 100	20.9
SM294	35	29 900	12.5	37 200	12.7	45 800	13.0	55 600	13.4	67 000	13.7	79 900	14.1	94 600	14.5	111 200	14.8
	55	-	-	-	-	-	-	45 400	19.7	55 100	19.9	66 200	20.2	78 900	20.6	93 300	21.1
SM296	35	29 200	14.0	36 500	14.1	45 000	14.2	54 800	14.2	66 100	14.3	79 000	14.4	93 600	14.5	110 100	14.6
	55	-	-	-	-	-	-	44 500	21.8	54 100	21.8	65 200	21.8	77 900	21.9	92 200	21.9
SM310	35	30 000	14.6	37 500	14.7	46 300	14.8	56 500	14.9	68 200	15.0	81 500	15.1	96 500	15.1	113 500	15.1
	55	-	-	-	-	-	-	45 400	22.8	56 000	22.9	68 100	22.9	81 900	22.8	97 300	22.7
SM320	35	30 600	15.2	38 600	15.4	47 900	15.6	58 600	15.7	70 800	15.9	84 700	16.1	100 300	16.3	117 900	16.5
	55	-	-	-	-	-	-	47 400	23.1	58 300	23.3	70 600	23.4	84 500	23.5	100 100	23.7
SM322	35	31 600	15.0	39 500	15.1	48 700	15.2	59 300	15.3	71 500	15.4	85 500	15.5	101 300	15.6	119 100	15.6
	55	-	-	-	-	-	-	48 100	23.4	58 600	23.4	70 600	23.4	84 200	23.5	99 700	23.5
SM350	35	33 500	16.1	42 000	16.3	52 000	16.4	63 600	16.6	76 800	16.7	91 800	16.8	108 700	16.9	127 700	17.0
	55	-	-	-	-	-	-	51 600	24.9	63 000	25.0	75 900	25.2	90 600	25.3	107 100	25.4
SM370	35	36 200	17.6	45 500	17.8	56 400	18.0	68 900	18.1	83 200	18.3	99 400	18.4	117 700	18.5	138 300	18.6
	55	-	-	-	-	-	-	55 900	27.2	68 200	27.3	82 300	27.5	98 200	27.6	116 000	27.7

To: Evaporating temperature in °C
Tc: Condensing temperature in °C
Qo: Cooling capacity in W
Pe: Power input in kW
Superheat = 11.1 K
Subcooling = 8.3 K
Voltage: 400 V / 3 / 50 Hz

Scroll compressors SZ R134a

Model	To	-15		-10		-5		0		5		10		15	
	Tc	Qo	Pe	Qo	Pe	Qo	Pe	Qo	Pe	Qo	Pe	Qo	Pe	Qo	Pe
SZ084	35	6 200	2.8	8 000	2.8	10 100	2.8	12 600	2.8	15 400	2.7	18 700	2.7	22 400	2.6
	55	-	-	6 100	4.3	7 900	4.3	9 900	4.3	12 400	4.3	15 100	4.3	18 300	4.2
SZ090	35	6 700	2.9	8 600	2.9	10 900	3.0	13 400	2.9	16 400	2.9	19 800	2.9	23 600	2.8
	55	-	-	6 600	4.5	8 500	4.6	10 700	4.6	13 200	4.6	16 000	4.5	19 300	4.5
SZ100	35	7 300	3.1	9 400	3.1	11 700	3.1	14 400	3.1	17 500	3.1	21 000	3.1	25 000	3.1
	55	-	-	7 300	4.8	9 300	4.8	11 500	4.9	14 100	4.9	17 100	4.9	20 400	4.8
SZ110	35	8 200	3.5	10 500	3.5	13 200	3.5	16 200	3.5	19 800	3.5	23 800	3.5	28 400	3.5
	55	-	-	8 100	5.4	10 400	5.4	13 000	5.5	16 000	5.5	19 400	5.5	23 300	5.4
SZ115	35	9 000	3.8	11 600	3.8	14 500	3.8	17 900	3.8	21 800	3.8	26 300	3.7	31 200	3.7
	55	-	-	8 900	5.9	11 400	5.9	14 300	5.9	17 600	5.9	21 400	5.9	25 700	5.9
SZ120	35	9 400	4.0	12 000	4.0	15 100	4.1	18 700	4.1	22 800	4.1	27 500	4.1	32 900	4.0
	55	-	-	9 300	6.2	11 900	6.3	14 900	6.3	18 400	6.3	22 400	6.3	27 000	6.2
SZ125	35	9 600	4.1	12 300	4.1	15 500	4.1	19 100	4.1	23 300	4.0	28 000	4.0	33 300	3.9
	55	-	-	9 500	6.3	12 100	6.3	15 200	6.3	18 800	6.3	22 800	6.3	27 400	6.2
SZ148	35	11 200	5.0	14 400	5.0	18 100	5.0	22 600	5.0	27 900	5.0	34 000	5.0	41 100	5.0
	55	-	-	11 200	7.7	14 200	7.7	17 800	7.7	22 100	7.7	27 100	7.8	32 800	7.8
SZ160	35	12 400	5.3	15 900	5.3	20 000	5.4	24 700	5.4	30 200	5.4	36 400	5.4	43 500	5.4
	55	-	-	12 300	7.9	15 800	8.0	19 800	8.0	24 500	8.1	29 800	8.1	35 900	8.1
SZ161	35	12 000	5.2	15 300	5.2	19 200	5.3	23 800	5.3	29 200	5.4	35 500	5.4	42 700	5.4
	55	-	-	12 100	8.0	15 300	8.0	19 200	8.1	23 700	8.1	28 900	8.1	35 000	8.1
SZ175	35	13 200	5.7	16 900	5.8	21 200	5.8	26 200	5.9	32 100	5.9	38 700	5.9	46 200	5.8
	55	-	-	13 100	8.6	16 700	8.6	21 000	8.7	26 000	8.7	31 700	8.8	38 100	8.8
SZ185	35	14 000	6.1	18 000	6.1	22 600	6.2	27 900	6.2	34 100	6.3	41 200	6.3	49 200	6.2
	55	-	-	13 900	9.1	17 800	9.2	22 400	9.3	27 700	9.3	33 700	9.3	40 600	9.3
SZ240	35	18 900	8.4	23 900	8.5	29 900	8.6	37 100	8.7	45 700	8.7	56 000	8.8	68 200	8.9
	55	-	-	18 800	12.3	23 800	12.5	29 700	12.6	36 700	12.7	45 000	12.9	54 700	13.0
SZ300	35	23 700	10.2	30 000	10.4	37 500	10.5	46 300	10.6	56 700	10.7	68 900	10.8	82 800	11.0
	55	-	-	23 600	15.2	29 700	15.4	37 100	15.6	45 800	15.9	55 900	16.1	67 800	16.4
SZ380	35	30 200	12.3	38 000	12.5	47 300	12.7	58 200	12.9	71 000	13.1	85 800	13.4	102 900	13.6
	55	-	-	30 100	18.1	37 800	18.4	46 900	18.7	57 600	19.0	70 000	19.2	84 400	19.4
SZ170	35	12 200	5.5	15 700	5.6	19 900	5.6	24 800	5.5	30 400	5.5	36 800	5.4	44 000	5.3
	55	-	-	11 900	8.6	15 500	8.6	19 600	8.6	24 300	8.6	29 800	8.5	36 000	8.4
SZ180	35	13 300	5.9	17 000	5.9	21 400	5.9	26 500	5.9	32 300	5.8	39 000	5.8	46 500	5.7
	55	-	-	13 100	9.1	16 800	9.1	21 100	9.1	26 000	9.1	31 600	9.1	38 000	9.0
SZ200	35	14 500	6.2	18 400	6.2	23 000	6.3	28 400	6.3	34 500	6.2	41 400	6.2	49 200	6.1
	55	-	-	14 400	9.6	18 200	9.7	22 700	9.7	27 800	9.7	33 600	9.7	40 200	9.7
SZ220	35	16 300	7.0	20 700	7.0	25 900	7.1	32 000	7.1	39 000	7.1	46 900	7.0	56 000	6.9
	55	-	-	16 100	10.8	20 500	10.9	25 600	10.9	31 400	10.9	38 200	10.9	45 900	10.9
SZ230	35	17 800	7.6	22 800	7.6	28 600	7.6	35 300	7.6	43 000	7.6	51 700	7.5	61 600	7.4
	55	-	-	17 500	11.7	22 500	11.8	28 200	11.8	34 800	11.8	42 200	11.8	50 700	11.7
SZ242	35	18 600	8.0	23 700	8.1	29 700	8.1	36 800	8.1	44 900	8.1	54 200	8.1	64 900	8.0
	55	-	-	18 300	12.5	23 400	12.5	29 300	12.5	36 200	12.5	44 200	12.5	53 300	12.4
SZ250	35	19 000	8.1	24 300	8.1	30 500	8.1	37 600	8.1	45 800	8.1	55 100	8.0	65 600	7.9
	55	-	-	18 600	12.5	23 900	12.5	30 000	12.6	37 000	12.6	45 000	12.5	54 000	12.5
SZ268	35	20 600	9.0	26 400	9.1	33 200	9.1	41 200	9.1	50 600	9.1	61 400	9.1	73 900	9.0
	55	-	-	20 100	13.9	25 700	14.0	32 300	14.0	39 900	14.0	48 800	14.0	59 100	14.0
SZ271	35	20 200	8.7	25 800	8.7	32 300	8.8	40 000	8.9	48 900	8.9	59 200	8.9	71 000	8.9
	55	-	-	19 900	13.4	25 300	13.5	31 600	13.5	39 000	13.6	47 600	13.6	57 400	13.6
SZ281	35	21 400	9.2	27 300	9.3	34 300	9.3	42 400	9.4	51 900	9.4	62 900	9.4	75 500	9.4
	55	-	-	21 000	14.2	26 800	14.3	33 500	14.3	41 500	14.4	50 600	14.4	61 200	14.3
SZ285	35	21 700	9.3	27 800	9.4	34 900	9.4	43 100	9.5	52 600	9.5	63 400	9.4	75 600	9.3
	55	-	-	21 400	14.2	27 500	14.2	34 500	14.3	42 600	14.4	51 900	14.4	62 400	14.3
SZ290	35	21 900	9.5	28 000	9.6	35 200	9.6	43 500	9.7	53 100	9.7	64 000	9.6	76 300	9.5
	55	-	-	21 600	14.4	27 700	14.5	34 800	14.6	43 000	14.6	52 300	14.7	62 900	14.6
SZ296	35	22 100	10.0	28 300	10.0	35 700	10.0	44 500	10.0	54 900	10.0	67 000	10.0	80 900	10.0
	55	-	-	22 000	15.4	28 000	15.4	35 200	15.4	43 500	15.5	53 300	15.5	64 700	15.6
SZ310	35	23 300	10.1	29 800	10.2	37 500	10.3	46 300	10.3	56 500	10.3	68 100	10.2	81 200	10.1
	55	-	-	23 000	15.4	29 500	15.5	37 100	15.5	45 800	15.6	55 700	15.6	67 000	15.6
SZ320	35	24 400	10.5	31 300	10.6	39 300	10.7	48 700	10.8	59 400	10.8	71 700	10.8	85 700	10.8
	55	-	-	24 200	15.8	31 000	15.9	39 000	16.0	48 200	16.1	58 700	16.2	70 700	16.2
SZ322	35	23 600	10.4	30 100	10.5	37 800	10.5	46 900	10.6	57 600	10.7	69 900	10.8	84 100	10.8
	55	-	-	23 800	15.9	30 200	16.0	37 800	16.1	46 600	16.2	56 900	16.2	68 900	16.2
SZ350	35	26 000	11.4	33 200	11.5	41 800	11.6	51 700	11.7	63 100	11.8	76 200	11.7	91 100	11.7
	55	-	-	25 700	17.1	33 000	17.3	41 400	17.4	51 200	17.5	62 400	17.5	75 100	17.5
SZ370	35	27 600	12.1	35 400	12.3	44 500	12.4	55 000	12.5	67 200	12.5	81 100	12.5	96 900	12.4
	55	-	-	27 400	18.2	35 100	18.4	44 100	18.5	54 500	18.6	66 400	18.7	79 900	18.6

To: Evaporating temperature in °C
Tc: Condensing temperature in °C

Qo: Cooling capacity in W
Pe: Power input in kW

Superheat = 11.1 K
Subcooling = 8.3 K

Voltage: 400 V / 3 / 50 Hz

Scroll compressors SZ R407C

Model	To	-20		-15		-10		-5		0		5		10		15	
	Tc	Qo	Pe	Qo	Pe	Qo	Pe	Qo	Pe	Qo	Pe	Qo	Pe	Qo	Pe	Qo	Pe
SZ084	35	7 200	3.9	9 300	3.9	11 800	4.0	14 800	4.0	18 300	4.0	22 300	4.0	27 000	4.0	32 300	3.9
	55	-	-	-	-	-	-	11 300	6.2	14 200	6.2	17 500	6.2	21 400	6.2	25 800	6.2
SZ090	35	7 600	4.1	9 800	4.1	12 500	4.2	15 600	4.2	19 300	4.2	23 600	4.2	28 500	4.2	34 100	4.1
	55	-	-	-	-	-	-	12 000	6.5	15 000	6.5	18 500	6.5	22 500	6.5	27 200	6.5
SZ100	35	8 100	4.3	10 500	4.4	13 300	4.4	16 600	4.4	20 500	4.5	25 000	4.4	30 100	4.4	36 000	4.4
	55	-	-	-	-	-	-	12 700	6.9	15 900	6.9	19 600	6.9	23 800	6.9	28 700	6.9
SZ110	35	9 300	4.9	12 000	5.0	15 200	5.0	19 000	5.0	23 400	5.0	28 500	5.0	34 300	5.0	40 900	4.9
	55	-	-	-	-	-	-	14 500	7.9	18 100	7.9	22 300	7.9	27 200	7.8	32 700	7.8
SZ115	35	10 100	5.4	13 100	5.4	16 600	5.4	20 800	5.5	25 600	5.4	31 100	5.4	37 400	5.4	44 500	5.3
	55	-	-	-	-	-	-	15 800	8.7	19 800	8.7	24 400	8.6	29 600	8.6	35 600	8.5
SZ120	35	11 000	5.7	14 200	5.7	17 900	5.8	22 200	5.8	27 300	5.8	33 200	5.8	39 900	5.7	47 600	5.6
	55	-	-	-	-	-	-	17 000	9.2	21 200	9.2	26 100	9.2	31 600	9.1	38 000	9.0
SZ125	35	10 800	5.7	14 000	5.7	17 700	5.7	22 100	5.7	27 200	5.7	33 100	5.7	39 800	5.7	47 400	5.6
	55	-	-	-	-	-	-	16 800	9.2	21 000	9.1	25 900	9.1	31 500	9.0	37 900	9.0
SZ148	35	13 500	6.9	17 300	7.0	21 700	7.0	27 000	7.0	33 100	7.1	40 300	7.1	48 500	7.1	57 800	7.2
	55	-	-	-	-	-	-	21 200	11.1	26 200	11.1	32 100	11.1	38 900	11.1	46 700	11.1
SZ160	35	14 800	7.3	19 000	7.4	23 900	7.5	29 700	7.6	36 400	7.6	44 300	7.6	53 300	7.6	63 600	7.6
	55	-	-	-	-	-	-	23 200	11.8	28 800	11.9	35 200	11.9	42 700	11.9	51 400	11.9
SZ161	35	14 600	7.4	18 700	7.5	23 500	7.5	29 200	7.6	35 800	7.6	43 500	7.6	52 400	7.7	62 600	7.8
	55	-	-	-	-	-	-	22 900	12.0	28 400	12.0	34 700	12.0	42 100	12.0	50 600	12.0
SZ175	35	15 500	8.0	19 800	8.0	25 000	8.1	31 100	8.2	38 100	8.2	46 300	8.2	55 600	8.2	66 200	8.2
	55	-	-	-	-	-	-	24 000	12.7	29 800	12.8	36 500	12.8	44 200	12.8	53 000	12.8
SZ185	35	16 600	8.6	21 300	8.6	26 900	8.7	33 400	8.8	41 000	8.8	49 700	8.8	59 700	8.8	71 100	8.8
	55	-	-	-	-	-	-	25 700	13.7	32 000	13.7	39 200	13.8	47 500	13.8	56 900	13.8
SZ240	35	22 400	11.7	28 900	11.8	36 500	11.9	45 400	12.1	55 900	12.2	68 000	12.4	82 000	12.5	98 000	12.6
	55	-	-	21 900	17.9	28 100	18.0	35 500	18.2	44 000	18.4	54 000	18.7	65 500	18.9	78 800	19.2
SZ300	35	28 700	13.7	36 200	13.9	45 100	14.1	55 500	14.3	67 600	14.5	81 700	14.7	98 000	14.9	116 600	15.2
	55	-	-	28 500	21.2	35 900	21.6	44 600	22.1	54 800	22.5	66 600	22.9	80 400	23.2	96 300	23.6
SZ380	35	36 000	16.9	45 300	17.3	56 400	17.6	69 400	18.0	84 600	18.3	102 200	18.6	122 400	18.9	145 400	19.4
	55	-	-	35 000	26.1	44 200	26.6	55 000	27.0	67 500	27.4	82 100	27.8	98 900	28.1	118 200	28.5
SZ170	35	14 200	7.8	18 300	7.9	23 200	8.0	29 100	8.0	36 000	8.0	44 000	8.0	53 200	8.0	63 700	7.9
	55	-	-	-	-	-	-	22 300	12.3	27 900	12.4	34 500	12.4	42 100	12.4	50 900	12.4
SZ180	35	15 000	8.2	19 400	8.3	24 600	8.3	30 800	8.4	38 000	8.4	46 400	8.4	56 100	8.3	67 100	8.2
	55	-	-	-	-	-	-	23 600	13.0	29 500	13.0	36 400	13.1	44 400	13.0	53 600	13.0
SZ200	35	16 000	8.7	20 600	8.8	26 100	8.8	32 700	8.9	40 300	8.9	49 200	8.9	59 300	8.8	70 900	8.7
	55	-	-	-	-	-	-	25 000	13.8	31 300	13.9	38 600	13.9	47 000	13.8	56 600	13.8
SZ220	35	18 400	9.9	23 700	9.9	30 000	10.0	37 400	10.1	46 100	10.1	56 100	10.0	67 500	10.0	80 600	9.8
	55	-	-	-	-	-	-	28 600	15.8	35 800	15.8	44 000	15.8	53 500	15.7	64 400	15.5
SZ230	35	20 000	10.8	25 800	10.8	32 800	10.9	40 900	10.9	50 400	10.9	61 200	10.9	73 700	10.8	87 700	10.7
	55	-	-	-	-	-	-	31 100	17.4	38 900	17.3	48 000	17.3	58 400	17.2	70 200	17.0
SZ242	35	21 600	11.4	27 900	11.5	35 200	11.6	43 800	11.6	53 800	11.6	65 400	11.5	78 600	11.4	93 700	11.2
	55	-	-	-	-	-	-	33 600	18.3	41 800	18.4	51 300	18.3	62 300	18.1	74 800	17.9
SZ250	35	21 200	11.4	27 500	11.4	34 900	11.5	43 500	11.5	53 600	11.5	65 200	11.4	78 300	11.4	93 300	11.3
	55	-	-	-	-	-	-	33 100	18.3	41 400	18.3	51 100	18.2	62 100	18.1	74 700	17.9
SZ268	35	24 100	12.6	31 000	12.7	39 000	12.8	48 500	12.9	59 500	12.9	72 300	12.9	87 000	12.9	103 800	12.8
	55	-	-	-	-	-	-	37 600	20.3	46 700	20.3	57 300	20.3	69 400	20.2	83 400	20.1
SZ271	35	23 900	12.4	30 600	12.5	38 700	12.6	48 100	12.6	59 100	12.6	71 900	12.7	86 600	12.7	103 400	12.7
	55	-	-	-	-	-	-	36 700	19.9	45 700	19.9	56 000	19.9	68 000	19.9	81 800	19.8
SZ281	35	25 200	13.1	32 300	13.2	40 800	13.3	50 700	13.4	62 200	13.4	75 600	13.4	90 900	13.4	108 500	13.4
	55	-	-	-	-	-	-	39 300	21.2	48 800	21.2	59 900	21.2	72 600	21.1	87 200	21.0
SZ285	35	25 500	13.0	32 900	13.2	41 500	13.3	51 700	13.3	63 500	13.3	77 200	13.3	92 900	13.3	110 800	13.2
	55	-	-	-	-	-	-	39 300	21.0	48 900	21.0	60 100	21.0	73 100	21.0	87 900	20.9
SZ290	35	25 200	13.4	32 500	13.5	41 000	13.5	51 100	13.6	62 800	13.7	76 200	13.7	91 600	13.6	109 000	13.5
	55	-	-	-	-	-	-	39 100	21.4	48 800	21.5	59 900	21.5	72 700	21.4	87 300	21.3
SZ296	35	26 600	13.8	34 000	13.9	42 800	14.0	53 200	14.1	65 300	14.2	79 300	14.2	95 500	14.3	114 000	14.4
	55	-	-	-	-	-	-	41 700	22.2	51 700	22.3	63 200	22.3	76 600	22.3	92 000	22.3
SZ310	35	27 000	14.2	34 700	14.4	43 900	14.5	54 700	14.5	67 200	14.6	81 600	14.6	98 000	14.5	116 700	14.4
	55	-	-	-	-	-	-	41 900	22.9	52 200	22.9	64 100	22.9	77 800	22.9	93 400	22.8
SZ320	35	29 200	14.7	37 300	14.9	47 000	15.0	58 400	15.1	71 800	15.2	87 200	15.2	105 000	15.2	125 400	15.2
	55	-	-	-	-	-	-	45 700	23.6	56 700	23.7	69 400	23.8	84 200	23.8	101 300	23.9
SZ322	35	28 700	14.9	36 800	15.0	46 300	15.1	57 500	15.1	70 600	15.2	85 800	15.3	103 300	15.4	123 300	15.5
	55	-	-	-	-	-	-	45 100	23.9	55 900	24.0	68 400	24.0	82 900	24.0	99 600	24.0
SZ350	35	30 500	15.9	39 100	16.1	49 300	16.2	61 200	16.3	75 200	16.4	91 200	16.4	109 500	16.4	130 300	16.4
	55	-	-	-	-	-	-	47 200	25.4	58 600	25.6	71 900	25.6	87 100	25.7	104 400	25.7
SZ370	35	32 700	17.1	42 000	17.3	52 900	17.4	65 800	17.5	80 700	17.6	98 000	17.7	117 700	17.7	140 000	17.6
	55	-	-	-	-	-	-	50 700	27.4	63 000	27.5	77 200	27.6	93 500	27.6	112 100	27.6

To: Evaporating temperature in °C
Tc: Condensing temperature in °C

Qo: Cooling capacity in W
Pe: Power input in kW

Superheat = 11.1 K
Subcooling = 8.3 K

Voltage: 400 V / 3 / 50 Hz

Scroll compressors – tandem

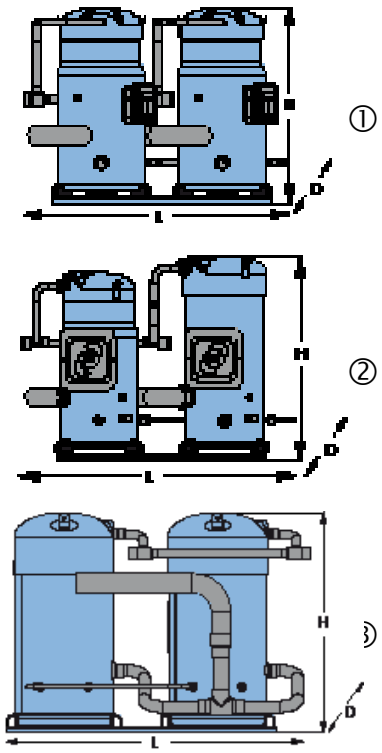

Outline n°	Model	Composition	Voltage code			Dimensions (mm)		
			4	6	7			
			400/3/50 460/3/60	230/3/50	500/3/50 575/3/60	L	D	H
①	SM/SZ170	S084 + S084	●	●	●	757	432	532
	SM/SZ180	S090 + S090	●	●	●	757	432	532
	SM/SZ200	S100 + S100	●	●	●	757	432	532
	SM/SZ220	S110 + S110	●	●	●	777	443	582
	SM/SZ230	S115 + S115	●	●	●	836	480	603
	SM/SZ242	S120 + S120	●	●	●	777	443	582
	SM248	S124 + S124	○			844	445	564
	SM/SZ250	S125 + S125	●	●	●	836	480	603
	SM272	S124 + S147	○			844	445	564
	SM294	S147 + S147	○			844	445	564
	SM/SZ296	S148 + S148	●	●	●	924	438	614
	SM/SZ320	S160 + S160	●	●	●	911	480	657
	SM/SZ322	S161 + S161	●	●	●	924	438	614
	SM/SZ350	S175 + S175	●	●	●	1004	495	717
	SM/SZ370	S185 + S185	●	●	●	1004	495	717
②	SM/SZ268	S148 + S120	●	●	●	930	441	614
	SM/SZ271	S161 + S110	●	●	●	930	441	614
	SM/SZ281	S161 + S120	●	●	●	930	441	614
	SM/SZ285	S160 + S125	●	●	●	884	480	657
	SM/SZ290	S175 + S115	●	●	●	924	496	705
	SM/SZ310	S185 + S125	●	●	●	924	496	705
	SY/SZ425	S240 + S185	○	○	○	1029	552	729
	SY/SZ485	S300 + S185	○	○	○	1029	552	740
③	SY/SZ482	S240 + S240	○	○	○	984	510	730
	SY/SZ540	S300 + S240	○	○	○	984	510	740
	SY/SZ600	S300 + S300	○	○	○	984	510	740
	SY/SZ620	S240 + S380	○			1058	595	770
	SY/SZ680	S300 + S380	○			1058	595	770
	SY/SZ760	S380 + S380	○			1063	595	770

● Factory built tandems
○ Tandems to be achieved by assembly of individual compressors. Specific outline drawings of tandems, trio and quadro units are available, refer to FRCC.PC.005.

Scroll compressors – SH

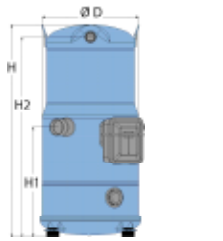

SH090-105-120-140*-161**
Except code 3

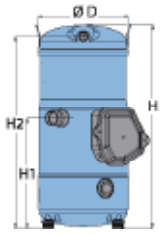

SH140-3 & 161-3 & 184

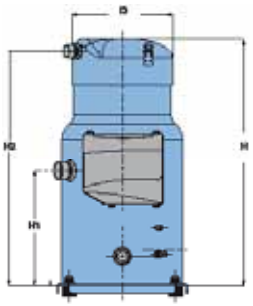
SH180 - 240 - 295

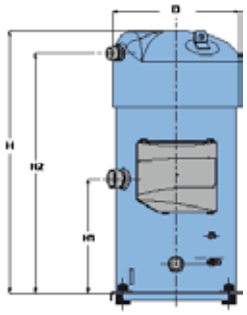
SH 300 - 380

Model	D	H	H1	H2
SH090	243	482	235	451
SH105	243	540	278	509
SH120	243	540	278	509
SH140	243	540	278	509
SH161	243	540	278	509
SH184	243	555	300	525
SH180	318	682	331	647
SH240	318	682	331	647
SH295	318	682	331	647
SH300	333	723	331	664
SH380	333	755	331	696

All dimensions in mm

Motor voltage code	Code 4	Code 6	Code 7
Nominal voltage	380-400 V - 3 ph	230 V - 3 ph	500V - 3 ph
Voltage range	340-440 V	207-253 V	450 - 550 V

Nameplate reference

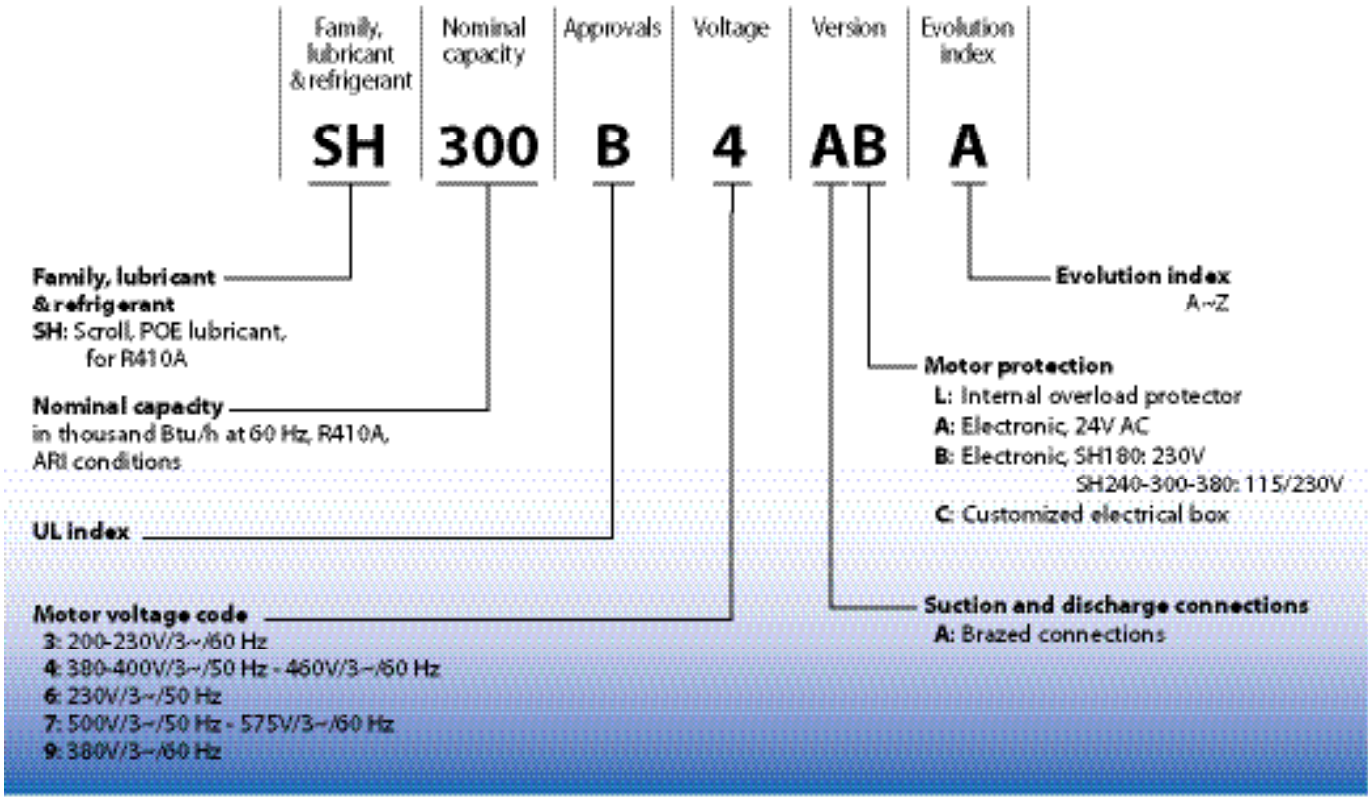

Scroll compressors – SH series

Scroll compressors R410A · SH · 50 Hz

	Te	-20	-20	-15	-15	-10	-10	-5	-5	0	0	5	5	10	10	15	15
	Tc	Cooling (W)	Pe (kW)	Cooling (W)	Pe (kW)	Cooling (W)	Pe (kW)	Cooling (W)	Pe (kW)	Cooling (W)	Pe (kW)	Cooling (W)	Pe (kW)	Cooling (W)	Pe (kW)	Cooling (W)	Pe (kW)
SH090-4	35	9600	4.97	12100	4.86	14900	4.78	18200	4.71	22000	4.66	26300	4.64	31300	4.64	36900	4.68
	45	8500	5.60	10500	6.08	13100	5.99	16100	5.91	19600	5.85	23500	5.82	28000	5.81	33200	5.83
	55	-	-	-	-	11300	7.09	13900	7.44	17000	7.38	20500	7.35	24500	7.33	29200	7.35
SH105-4	35	11800	5.93	14700	5.83	18000	5.74	21900	5.67	26300	5.62	31400	5.59	37100	5.58	43700	5.58
	45	10200	6.66	12900	7.24	15900	7.15	19400	7.08	23400	7.02	28100	6.99	33400	6.97	39400	6.97
	55	-	-	-	-	13900	8.35	16800	8.82	20400	8.77	24600	8.73	29400	8.72	34800	8.73
SH120-4	35	13400	6.56	16700	6.48	20500	6.38	24900	6.28	30000	6.20	35800	6.17	42400	6.21	49900	6.32
	45	11400	7.35	14600	8.05	18100	8.00	22100	7.92	26700	7.84	32000	7.77	38000	7.75	44900	7.78
	55	-	-	-	-	15200	9.34	19100	9.82	23200	9.79	27900	9.74	33300	9.71	39500	9.70
SH140-4	35	15500	7.38	19200	7.30	23400	7.20	28400	7.11	34000	7.06	40500	7.04	47800	7.09	56100	7.22
	45	13700	8.53	16900	9.12	20800	9.04	25200	8.93	30400	8.83	36200	8.73	42900	8.68	50500	8.67
	55	-	-	-	-	18000	10.75	21700	11.20	26200	11.08	31400	10.95	37400	10.83	44200	10.72
SH161-4	35	17600	7.78	21700	7.77	26500	7.79	32100	7.83	38500	7.88	45800	7.92	54100	7.93	63600	7.91
	45	15100	9.80	19100	9.72	23500	9.72	28600	9.75	34400	9.79	41000	9.83	48700	9.87	57300	9.88
	55	-	-	-	-	19900	12.37	24600	12.16	29700	12.17	35700	12.20	42500	12.23	50300	12.25
SH180-4	35	19200	9.09	24000	9.12	29600	9.14	36000	9.16	43500	9.19	52100	9.23	61800	9.30	72700	9.38
	45	16600	11.26	21000	11.30	26200	11.33	32100	11.34	39000	11.34	46800	11.34	55700	11.35	65800	11.37
	55	-	-	-	-	22300	14.12	27600	14.12	33700	14.10	40700	14.07	48700	14.03	57800	13.99
SH184-4	35	19800	9.25	24500	9.16	29900	9.09	36200	9.04	43400	9.04	51700	9.08	61200	9.20	71900	9.39
	45	17800	10.65	21600	11.43	26500	11.34	32200	11.25	38700	11.20	46300	11.18	54800	11.21	64600	11.31
	55	-	-	-	-	23400	13.36	27800	13.98	33600	13.89	40200	13.82	47900	13.78	56600	13.80
SH240-4	35	26700	11.95	33200	12.02	40700	12.06	49200	12.11	59000	12.17	70200	12.27	82800	12.43	97100	12.65
	45	23300	14.80	29300	14.90	36100	14.97	43900	15.02	52800	15.06	63000	15.12	74500	15.21	87400	15.34
	55	-	-	-	-	30900	18.57	37800	18.64	45800	18.69	54800	18.72	65100	18.77	76800	18.85
SH295-4	35	33300	14.42	40900	14.61	49800	14.77	60200	14.95	72100	15.19	85700	15.53	101200	16.03	118600	16.72
	45	29400	17.53	36300	17.83	44400	18.05	53800	18.23	64600	18.41	76900	18.64	91000	18.96	107000	19.42
	55	-	-	-	-	38500	22.00	46700	22.27	56200	22.48	67200	22.68	79800	22.91	94100	23.22
SH300-4	35	34000	14.96	42000	15.13	51300	15.30	62100	15.49	74400	15.70	88500	15.96	104600	16.27	122700	16.66
	45	29800	18.35	37100	18.51	45500	18.67	55200	18.84	66500	19.03	79300	19.26	93900	19.55	110500	19.91
	55	-	-	-	-	39000	22.98	47600	23.13	57500	23.30	68900	23.50	82000	23.75	96900	24.07
SH380-4	35	40400	18.41	50000	18.58	61100	18.70	74000	18.83	88900	18.99	105900	19.24	125300	19.61	147200	20.15
	45	35500	22.35	44200	22.65	54300	22.85	66000	22.99	79600	23.12	95100	23.26	112900	23.48	133000	23.80
	55	-	-	-	-	46600	27.95	57000	28.19	69000	28.35	82900	28.47	98900	28.61	117100	28.79

To: Evaporating temperature in °C
Tc: Condensing temperature in °C

Qo: Cooling capacity in W
Pe: Power input in kW

Superheat = 11.1 K
Subcooling = 8.3 K

Voltage: 400 V / 3 / 50 Hz

Further reference

Compressor model	Connections	Mounting feet	Motor protection	Code no. for Industrial pack		Code no. for Single pack		
				Nbr	4	4	6	7
					460/3/60 380-400/3/50	460/3/60 380-400/3/50	230/3/50	575/3/60 500/3/50
SH090	Brazed	Flexible	Internal	8	120H0004	120H0003	120H0005	120H0007
SH105	Brazed	Flexible	Internal	8	120H0212	120H0211	120H0213	120H0215
SH120	Brazed	Flexible	Internal	8	120H0014	120H0013	120H0015	120H0017
SH140	Brazed	Flexible	Internal	8	120H0202	120H0201	120H0203	120H0205
SH161	Brazed	Flexible	Internal	8	120H0024	120H0023	120H0025	120H0027
SH184	Brazed	Flexible	Internal		120H0362	120H0361	120H0363	120H0365
SH180 ①	Brazed	rigid	Module 24V AC *	6	120H0268	120H0267	-	120H0269
	Brazed	rigid	Module 230 V *	6	120H0276	120H0457	-	120H0459
SH240 ①	Brazed	rigid	Module 24V AC *	6	120H0292	120H0291	-	120H0293
	Brazed	rigid	Module 115-230 V *	6	120H0300	120H0465	-	120H0467
SH245 ①	Brazed	rigid	Module 24V AC *	6	120H0292	120H0291	-	120H0293
	Brazed	rigid	Module 115-230 V *	6	120H0300	120H0465	-	120H0467
SH300 ①	Brazed	rigid	Module 24V AC *	4	120H0238	120H0237	-	120H0241
	Brazed	rigid	Module 115-230 V *	4	120H0240	120H0473	-	120H0475
SH380 ①	Brazed	rigid	Module 24V AC *		120H0254	120H0253	-	120H0257
	Brazed	rigid	Module 115-230 V *	4	120H0256	120H0481	-	120H0483

① models with rigid mounting feet are for parallel mounting only. For single mounting use flexible grommet kit ref 8156138
* Electronic motor protection, module located in terminal box

Scroll compressors - R404A

	Model	To	-25		-20		-15		-10		-5		0		5		10	
		Tc	Qo	Pe	Qo	Pe	Qo	Pe	Qo	Pe	Qo	Pe	Qo	Pe	Qo	Pe	Qo	Pe
50Hz	MLZ015T4	30	2 300	1.2	2 900	1.2	3 500	1.2	4 300	1.2	5 200	1.2	6 200	1.2	7 400	1.1	8 700	1.1
		40	1 900	1.6	2 400	1.6	3 000	1.6	3 700	1.5	4 400	1.5	5 300	1.5	6 300	1.5	7 400	1.5
		50	-	-	1 800	2.1	2 400	2.0	2 900	2.0	3 600	1.9	4 300	1.9	5 100	1.9	6 000	1.9
	MLZ019T4	30	3 000	1.5	3 800	1.5	4 600	1.5	5 600	1.5	6 700	1.5	8 000	1.5	9 500	1.5	11 200	1.6
		40	2 600	1.9	3 300	1.9	4 000	1.9	4 800	1.9	5 800	1.9	6 900	1.9	8 200	1.9	9 700	1.9
		50	-	-	2 700	2.4	3 300	2.4	4 000	2.4	4 800	2.4	5 800	2.4	6 800	2.4	8 100	2.3
	MLZ021T4	30	3 200	1.6	4 000	1.6	4 900	1.6	5 900	1.6	7 100	1.6	8 500	1.6	10 000	1.7	11 800	1.7
		40	2 800	2.0	3 500	2.0	4 300	2.0	5 100	2.0	6 200	2.0	7 300	2.0	8 700	2.0	10 300	2.0
		50	-	-	2 900	2.5	3 500	2.5	4 300	2.6	5 100	2.5	6 100	2.5	7 300	2.5	8 600	2.4
	MLZ026T4	30	4 100	2.0	5 000	2.0	6 100	2.0	7 400	2.0	8 900	2.0	10 600	2.0	12 500	2.0	14 700	2.0
		40	3 500	2.5	4 300	2.5	5 300	2.5	6 400	2.5	7 700	2.5	9 200	2.5	10 900	2.5	12 800	2.5
		50	-	-	3 600	3.2	4 400	3.2	5 300	3.2	6 400	3.2	7 700	3.1	9 100	3.1	10 700	3.2
	MLZ030T4	30	4 900	2.3	6 000	2.4	7 300	2.4	8 900	2.4	10 700	2.4	12 700	2.4	15 100	2.4	17 700	2.3
		40	4 200	2.9	5 200	3.0	6 400	3.0	7 700	3.0	9 300	3.0	11 100	3.0	13 100	3.0	15 400	2.9
		50	-	-	4 300	3.7	5 300	3.7	6 400	3.7	7 700	3.7	9 200	3.7	11 000	3.7	12 900	3.7
	MLZ038T4	30	5 800	2.8	7 200	2.8	8 800	2.8	10 600	2.9	12 800	2.9	15 200	2.9	18 000	2.8	21 200	2.7
		40	5 000	3.6	6 200	3.5	7 600	3.5	9 200	3.6	11 100	3.6	13 200	3.6	15 600	3.6	18 400	3.5
		50	-	-	5 100	4.5	6 300	4.4	7 700	4.4	9 200	4.4	11 000	4.5	13 100	4.4	15 400	4.4
	MLZ042T4	30	6 300	3.2	7 900	3.3	9 800	3.4	12 000	3.5	14 500	3.6	17 500	3.6	20 900	3.6	24 800	3.5
		40	5 500	4.1	6 900	4.1	8 500	4.2	10 400	4.2	12 500	4.3	15 100	4.3	18 000	4.3	21 500	4.3
		50	-	-	5 800	5.3	7 100	5.3	8 600	5.3	10 400	5.3	12 600	5.3	15 100	5.3	18 100	5.3
	MLZ045T4	30	7 000	3.4	8 600	3.4	10 600	3.4	12 800	3.5	15 400	3.5	18 300	3.5	21 600	3.4	25 300	3.2
		40	6 100	4.3	7 500	4.3	9 100	4.3	11 100	4.3	13 300	4.3	15 900	4.3	18 800	4.3	22 000	4.2
		50	-	-	6 200	5.5	7 600	5.4	9 200	5.4	11 100	5.4	13 200	5.4	15 700	5.4	18 500	5.3
	MLZ048T4	30	7 600	3.7	9 400	3.7	11 500	3.7	13 900	3.7	16 700	3.7	19 900	3.7	23 600	3.7	27 900	3.6
		40	6 600	4.6	8 200	4.6	10 000	4.6	12 100	4.6	14 500	4.6	17 300	4.6	20 500	4.6	24 200	4.6
		50	-	-	6 800	5.8	8 300	5.8	10 100	5.8	12 100	5.8	14 400	5.8	17 100	5.8	20 300	5.7
	MLZ058T4	30	9 300	4.3	11 300	4.4	13 800	4.5	16 900	4.5	20 400	4.5	24 400	4.6	28 900	4.6	33 700	4.7
		40	7 600	5.5	9 300	5.6	11 600	5.6	14 300	5.6	17 400	5.5	20 900	5.6	24 800	5.6	29 000	5.8
		50	-	-	7 100	7.2	9 000	7.1	11 300	7.0	14 000	6.9	17 000	6.9	20 300	6.9	23 900	7.1
	MLZ066T4	30	10 400	4.9	12 900	5.0	15 700	5.0	19 000	5.1	22 800	5.2	27 200	5.3	32 300	5.5	38 000	5.8
		40	9 000	6.1	11 200	6.1	13 600	6.2	16 500	6.2	19 800	6.3	23 600	6.4	27 900	6.5	32 800	6.7
		50	-	-	9 200	7.7	11 400	7.7	13 800	7.7	16 600	7.7	19 700	7.8	23 300	7.8	27 400	7.9
	MLZ076T4	30	12 200	5.7	15 200	5.7	18 500	5.7	22 400	5.8	26 800	5.9	31 900	6.1	37 800	6.2	44 600	6.3
		40	10 600	7.0	13 100	7.0	15 900	7.1	19 100	7.1	22 900	7.2	27 200	7.3	32 300	7.4	38 200	7.5
		50	-	-	11 000	8.7	13 000	8.7	15 400	8.8	18 300	8.9	21 800	8.9	25 900	9.0	30 800	9.0
60Hz	MLZ015T4	30	2 800	1.5	3 500	1.5	4 300	1.5	5 200	1.5	6 200	1.5	7 500	1.4	8 900	1.4	10 500	1.4
		40	2 300	1.9	2 900	1.9	3 600	1.9	4 500	1.9	5 400	1.9	6 400	1.8	7 600	1.8	9 000	1.8
		50	-	-	2 300	2.3	3 000	2.3	3 700	2.4	4 400	2.3	5 300	2.3	6 300	2.3	7 500	2.3
	MLZ019T4	30	3 800	1.8	4 600	1.8	5 700	1.8	6 800	1.8	8 200	1.8	9 700	1.8	11 500	1.9	13 500	1.9
		40	3 200	2.2	4 000	2.3	4 900	2.3	5 900	2.3	7 100	2.3	8 400	2.3	10 000	2.3	11 700	2.3
		50	-	-	3 300	2.8	4 100	2.8	5 000	2.9	6 000	2.9	7 100	2.9	8 400	2.8	9 900	2.8
	MLZ021T4	30	4 000	1.8	4 900	1.9	6 000	2.0	7 300	2.0	8 700	2.0	10 400	2.0	12 200	2.0	14 200	2.1
		40	3 400	2.3	4 300	2.4	5 200	2.4	6 300	2.5	7 600	2.4	9 000	2.4	10 600	2.4	12 400	2.5
		50	-	-	3 600	3.0	4 400	3.1	5 300	3.1	6 400	3.0	7 600	3.0	9 000	3.0	10 500	3.0
	MLZ026T4	30	5 000	2.3	6 100	2.4	7 500	2.5	9 100	2.5	10 900	2.5	12 900	2.5	15 200	2.5	17 800	2.5
		40	4 300	2.9	5 300	3.0	6 500	3.1	7 900	3.1	9 400	3.1	11 200	3.1	13 200	3.1	15 400	3.1
		50	-	-	4 400	3.7	5 400	3.8	6 600	3.8	7 900	3.8	9 400	3.8	11 100	3.8	13 000	3.8
	MLZ030T4	30	5 800	2.7	7 200	2.8	8 800	2.8	10 700	2.8	12 800	2.9	15 200	2.9	17 800	2.8	20 800	2.8
		40	5 100	3.5	6 300	3.5	7 600	3.5	9 300	3.5	11 100	3.5	13 200	3.5	15 500	3.5	18 200	3.5
		50	-	-	5 200	4.3	6 400	4.3	7 700	4.3	9 300	4.4	11 100	4.4	13 100	4.4	15 400	4.4
	MLZ038T4	30	7 000	3.4	8 600	3.3	10 500	3.4	12 700	3.4	15 300	3.4	18 100	3.4	21 400	3.4	25 100	3.3
		40	6 000	4.2	7 500	4.2	9 200	4.2	11 100	4.2	13 300	4.2	15 800	4.3	18 600	4.2	21 800	4.2
		50	-	-	6 200	5.2	7 700	5.2	9 300	5.2	11 200	5.3	13 300	5.3	15 600	5.3	18 300	5.2
	MLZ042T4	30	8 100	3.9	10 100	4.0	12 300	4.1	14 800	4.1	17 700	4.0	21 100	4.0	24 800	4.0	29 100	4.1
		40	7 000	5.0	8 700	5.1	10 700	5.1	12 900	5.1	15 400	5.1	18 300	5.1	21 600	5.0	25 300	5.1
		50	-	-	7 200	6.4	8 900	6.4	10 800	6.4	12 900	6.4	15 400	6.3	18 200	6.3	21 400	6.3
	MLZ045T4	30	8 500	4.0	10 500	4.0	12 800	4.0	15 500	4.1	18 600	4.1	22 100	4.1	26 000	4.1	30 400	4.1
		40	7 400	4.9	9 100	5.0	11 100	5.0	13 500	5.0	16 100	5.0	19 100	5.0	22 600	5.1	26 400	5.1
		50	-	-	7 600	6.3	9 300	6.3	11 300	6.3	13 500	6.3	16 100	6.3	19 000	6.3	22 300	6.3
	MLZ048T4	30	9 300	4.3	11 400	4.3	14 000	4.4	16 900	4.4	20 300	4.5	24 100	4.5	28 400	4.4	33 100	4.3
		40	8 100	5.4	9 900	5.4	12 100	5.5	14 700	5.5	17 600	5.6	21 000	5.6	24 700	5.5	28 800	5.5
		50	-	-	8 300	6.8	10 100	6.8	12 300	6.8	14 800	6.9	17 600	6.9	20 800	6.9	24 300	6.8
	MLZ058T4	30	10 800	5.2	13 600	5.3	16 800	5.4	20 500	5.5	24 800	5.6	29 600	5.7	35 000	5.8	40 900	5.8
		40	9 000	6.6	11 400	6.5	14 200	6.6	17 400	6.6	21 100	6.7	25 300	6.9	29 900	7.0	35 100	7.0
		50	-	-	8 900	8.3	11 200	8.2	13 900	8.2	17 000	8.2	20 400	8.3	24 300	8.4	28 500	8.5
	MLZ066T4	30	12 600	6.0	15 500	6.1	18 900	6.2	22 900	6.3	27 600	6.5	32 800	6.7	38 800	6.8	45 500	6.9
		40	10 900	7.3	13 500	7.4	16 500	7.5	19 900	7.6	23 900	7.8	28 500	7.9	33 600	8.1	39 300	8.2
		50	-	-	11 200	9.1	13 800	9.1	16 700	9.3	20 100	9.4	23 800	9.5	28 100	9.6	32 900	9.7
	MLZ076T4	30	14 600	6.7	17 900	6.9	21 800	7.1	26 400	7.2	31 700	7.4	37 800	7.6	44 800	7.9	52 900	8.3
		40	12 600	8.2	15 500	8.4	18 900	8.6	22 800	8.7	27 300	8.8	32 500	9.0	38 500	9.2	45 300	9.6
		50	-	-	12 900	10.4	15 700	10.5	18 900	10.6	22 600	10.7	26 800	10.8	31 700	11.0	37 300	11.3

Legend:
To: Evaporating temperature in °C
Tc: Condensing temperature in °C
Qo: Cooling capacity in W
Pe: Power input in kW
RGT = 20°C
Subcooling =0 K

Scroll compressors - R134a

	Model	To	-10		-5		0		5		10		15	
		Tc	Qo	Pe	Qo	Pe	Qo	Pe	Qo	Pe	Qo	Pe	Qo	Pe
50Hz	MLZ015T4	30	2 400	0.7	3 000	0.7	3 700	0.8	4 500	0.8	5 400	0.8	-	-
		40	-	-	2 700	0.9	3 300	0.9	4 100	0.9	4 900	0.9	5 900	1.0
		50	-	-	2 400	1.1	3 000	1.1	3 600	1.2	4 400	1.2	5 200	1.2
	MLZ019T4	30	3 100	0.9	3 800	1.0	4 700	1.0	5 800	1.0	7 000	1.0	-	-
		40	-	-	3 500	1.2	4 300	1.2	5 200	1.2	6 300	1.2	7 600	1.2
		50	-	-	3 100	1.4	3 800	1.5	4 700	1.5	5 600	1.5	6 700	1.5
	MLZ021T4	30	3 300	1.0	4 100	1.0	5 000	1.0	6 100	1.0	7 400	1.0	-	-
		40	-	-	3 700	1.2	4 600	1.2	5 600	1.2	6 700	1.3	8 000	1.3
		50	-	-	3 300	1.5	4 000	1.5	4 900	1.5	6 000	1.5	7 200	1.6
	MLZ026T4	30	4 100	1.2	5 100	1.2	6 200	1.2	7 600	1.2	9 100	1.3	-	-
		40	-	-	4 600	1.5	5 600	1.5	6 900	1.5	8 300	1.5	9 900	1.6
		50	-	-	4 100	1.8	5 000	1.8	6 100	1.9	7 400	1.9	8 900	1.9
	MLZ030T4	30	4 900	1.4	6 100	1.4	7 500	1.4	9 100	1.5	11 000	1.5	-	-
		40	-	-	5 500	1.8	6 800	1.8	8 300	1.8	10 000	1.8	12 000	1.8
		50	-	-	4 900	2.2	6 000	2.2	7 400	2.2	8 900	2.2	10 700	2.3
	MLZ038T4	30	5 800	1.7	7 200	1.7	8 800	1.8	10 700	1.8	12 900	1.8	-	-
		40	-	-	6 500	2.2	8 000	2.2	9 700	2.2	11 700	2.2	14 000	2.2
		50	-	-	5 700	2.6	7 100	2.7	8 700	2.7	10 500	2.7	12 500	2.7
	MLZ042T5	30	6 600	2.1	8 200	2.2	10 100	2.2	12 100	2.3	14 400	2.4	-	-
		40	-	-	7 500	2.6	9 200	2.6	11 100	2.7	13 200	2.7	15 700	2.8
		50	-	-	6 500	3.1	8 100	3.1	9 900	3.2	11 800	3.2	14 100	3.2
	MLZ045T4	30	7 100	2.0	8 900	2.0	11 000	2.0	13 300	2.0	16 000	2.0	-	-
		40	-	-	8 000	2.5	9 900	2.5	12 100	2.5	14 600	2.5	17 400	2.6
		50	-	-	7 100	3.0	8 800	3.1	10 800	3.1	13 000	3.1	15 600	3.2
	MLZ048T4	30	7 600	2.1	9 500	2.1	11 600	2.2	14 100	2.2	16 900	2.2	-	-
		40	-	-	8 500	2.7	10 500	2.7	12 800	2.7	15 400	2.7	18 300	2.7
		50	-	-	7 500	3.3	9 300	3.3	11 400	3.4	13 800	3.4	16 400	3.4
	MLZ058T4	30	9 100	2.6	11 300	2.7	13 800	2.8	16 600	2.8	20 000	2.9	-	-
		40	-	-	10 100	3.3	12 400	3.4	15 100	3.4	18 100	3.4	21 500	3.4
		50	-	-	9 000	4.1	11 100	4.1	13 400	4.2	16 100	4.2	19 200	4.1
	MLZ066T4	30	10 500	3.0	13 100	3.1	16 000	3.1	19 300	3.2	23 200	3.2	-	-
		40	-	-	11 800	3.8	14 500	3.8	17 500	3.9	21 100	3.9	25 000	3.9
		50	-	-	10 400	4.6	12 800	4.7	15 600	4.7	18 800	4.8	22 300	4.7
	MLZ076T4	30	11 800	3.4	14 600	3.5	17 900	3.6	21 600	3.7	25 800	3.7	-	-
		40	-	-	13 100	4.3	16 100	4.4	19 600	4.4	23 500	4.4	28 000	4.4
		50	-	-	11 600	5.3	14 300	5.4	17 400	5.4	21 000	5.4	25 000	5.3
60Hz	MLZ015T4	30	3 000	0.9	3 700	0.9	4 600	0.9	5 500	0.9	6 600	1.0	-	-
		40	-	-	3 400	1.1	4 200	1.1	5 100	1.1	6 100	1.2	7 200	1.2
		50	-	-	3 000	1.3	3 700	1.4	4 600	1.4	5 500	1.4	6 500	1.4
	MLZ019T4	30	3 800	1.2	4 800	1.2	5 900	1.2	7 100	1.2	8 500	1.3	-	-
		40	-	-	4 300	1.4	5 400	1.5	6 500	1.5	7 800	1.5	9 300	1.5
		50	-	-	3 900	1.7	4 800	1.8	5 900	1.8	7 100	1.8	8 400	1.8
	MLZ021T4	30	4 100	1.2	5 100	1.2	6 200	1.2	7 600	1.2	9 100	1.3	-	-
		40	-	-	4 600	1.5	5 700	1.5	6 900	1.5	8 300	1.5	9 900	1.6
		50	-	-	4 100	1.8	5 100	1.8	6 200	1.9	7 500	1.9	8 900	1.9
	MLZ026T4	30	5 000	1.4	6 300	1.5	7 700	1.5	9 300	1.5	11 200	1.6	-	-
		40	-	-	5 700	1.8	7 000	1.8	8 600	1.9	10 300	1.9	12 200	1.9
		50	-	-	5 100	2.2	6 300	2.2	7 700	2.3	9 300	2.3	11 000	2.3
	MLZ030T4	30	6 000	1.8	7 500	1.8	9 300	1.8	11 300	1.8	13 500	1.9	-	-
		40	-	-	6 800	2.2	8 500	2.2	10 300	2.2	12 400	2.3	14 700	2.3
		50	-	-	6 100	2.6	7 600	2.7	9 300	2.7	11 200	2.8	13 300	2.8
	MLZ038T4	30	7 100	2.1	8 800	2.1	10 900	2.2	13 200	2.2	15 900	2.3	-	-
		40	-	-	8 000	2.6	9 900	2.6	12 100	2.7	14 600	2.7	17 300	2.8
		50	-	-	7 200	3.1	8 900	3.2	10 900	3.2	13 200	3.3	15 700	3.3
	MLZ042T1	30	8 000	2.6	9 900	2.6	12 100	2.7	14 600	2.8	17 300	2.8	-	-
		40	-	-	9 000	3.1	11 000	3.2	13 400	3.2	16 000	3.3	19 000	3.4
		50	-	-	7 900	3.7	9 800	3.8	11 900	3.8	14 400	3.9	17 200	4.0
	MLZ045T4	30	8 800	2.4	11 000	2.5	13 500	2.5	16 300	2.6	19 500	2.6	-	-
		40	-	-	9 900	3.0	12 200	3.1	14 800	3.1	17 800	3.2	21 100	3.3
		50	-	-	8 600	3.7	10 700	3.8	13 100	3.8	15 800	3.9	18 900	3.9
	MLZ048T4	30	9 300	2.6	11 600	2.7	14 200	2.7	17 200	2.8	20 600	2.9	-	-
		40	-	-	10 400	3.3	12 900	3.3	15 600	3.4	18 800	3.4	22 200	3.5
		50	-	-	9 200	4.0	11 300	4.1	13 900	4.1	16 700	4.2	19 900	4.2
	MLZ058T4	30	11 100	3.1	13 700	3.2	16 800	3.3	20 200	3.5	24 000	3.6	-	-
		40	-	-	12 400	4.0	15 200	4.1	18 300	4.2	21 900	4.2	25 900	4.3
		50	-	-	11 000	4.8	13 500	5.0	16 300	5.1	19 600	5.1	23 300	5.1
	MLZ066T4	30	12 700	3.6	15 700	3.7	19 200	3.8	23 200	4.0	27 600	4.1	-	-
		40	-	-	14 200	4.5	17 400	4.7	21 100	4.8	25 200	4.9	29 800	4.9
		50	-	-	12 600	5.5	15 500	5.7	18 800	5.8	22 500	5.9	26 700	5.9
	MLZ076T4	30	14 300	4.1	17 600	4.2	21 500	4.4	26 000	4.5	31 000	4.7	-	-
		40	-	-	16 000	5.2	19 600	5.3	23 600	5.5	28 300	5.6	33 400	5.6
		50	-	-	14 200	6.4	17 400	6.5	21 100	6.6	25 300	6.7	29 800	6.7

Legend: To: Evaporating temperature in °C
Tc: Condensing temperature in °C
Qo: Cooling capacity in W
Pe: Power input in kW
RGT = 20°C
Subcooling =0 K

Capacity data at other conditions are available in the datasheets at: www.danfoss.com/odsg

Scroll compressors · MLZ

Model	Dimensions (mm)			
	D	H	H1	H2
MLZ 015	165	412	250	379
MLZ 019	165	412	250	379
MLZ 021	165	412	250	379
MLZ 026	165	412	250	379
MLZ 030	184	455	280	422
MLZ 038	184	455	280	422
MLZ 045	184	455	280	422
MLZ 048	184	455	280	422
MLZ 058	185	536	369	509
MLZ 066	185	545	369	518
MLZ 076	185	545	369	518

MLZ 015 - 019 - 021 - 026

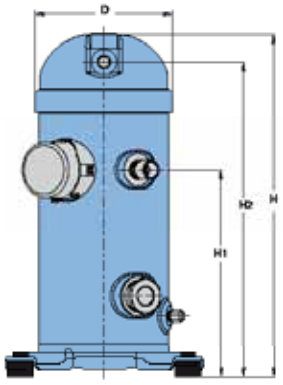

MLZ 030 - 038 - 045 - 048

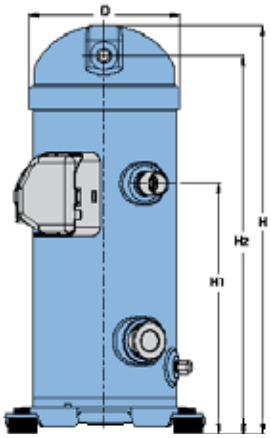

MLZ 058 - 066 - 076

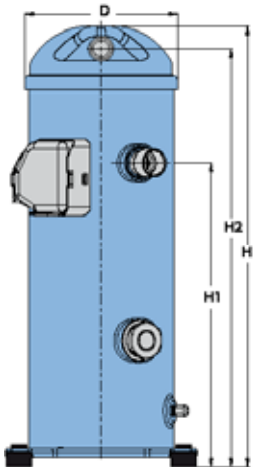

Common footprint • MLZ 015 - 076

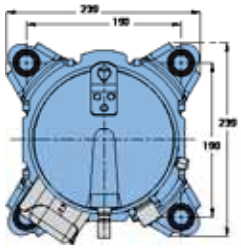

Nomenclature

Type	Size	Motor	Features
MLZ	021	T4L	P9

Application
M: medium temperature refrigeration

Family, Refrigerant & lubricant
LZ: R404A - R507 - R134a - R22, PVE lubricant

Nominal capacity
In thousand Btu/h at 60 Hz,
ARI, MBP conditions

Model variation
T: design optimised for refrigeration

Other features

	Oil sight glass	Oil equalisation	Oil drain	LP gauge port	Gas equalisation port
9	Threaded	None	Schrader	None	None

Tubing and electrical connections
P: brazed connections, spade terminals
C: brazed connections, screw terminals

Motor protection
L: internal motor protection

Motor voltage code
1: 208-230V/1~/60 Hz
2: 200-220V/3~/50 Hz & 208-230V/3~/60 Hz
4: 380-400V/3~/50 Hz & 460V/3~/60 Hz
5: 220-240V/1~/50 Hz
7: 500V/3~/50 Hz & 575V/ 3~/60 Hz
9: 380V/3~/60 Hz

Performer® heat pump scroll compressors

HPP015-019-021-026

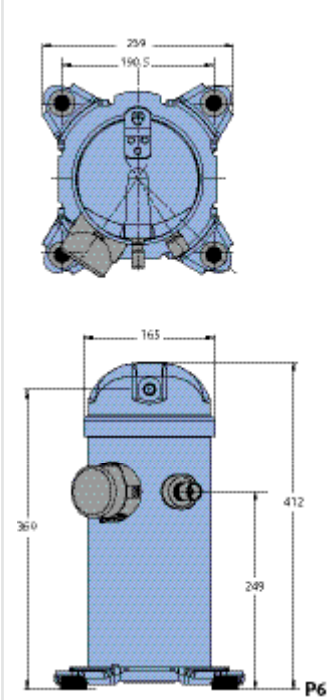

HPP030-038-045

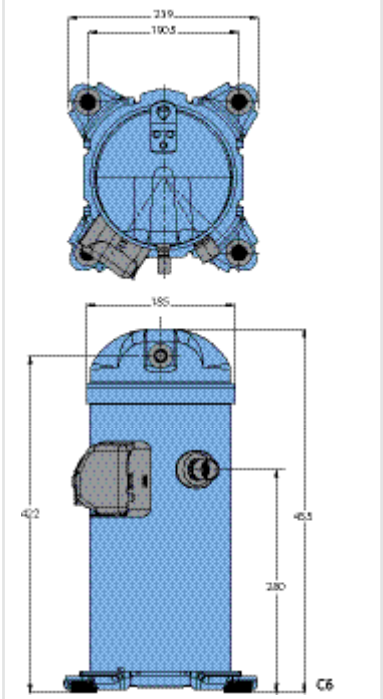

All dimensions in mm

Performance table R407C

Model	To	-25		-20		-15		-10		-5		0		5		10		15	
	Tc	H	Pe	H	Pe	H	Pe	H	Pe	H	Pe	H	Pe	H	Pe	H	Pe	H	Pe
HHP015T4	40	2 550	1.1	3 070	1.1	3 720	1.2	4 510	1.3	5 450	1.3	6 520	1.4	7 730	1.4	9 080	1.4	10 570	1.4
	50	2 620	1.5	3 050	1.5	3 620	1.5	4 320	1.5	5 150	1.6	6 120	1.6	7 220	1.7	8 460	1.7	9 840	1.7
	60	-	-	-	-	3 860	2.2	4 410	2.1	5 090	2.1	5 890	2.1	6 830	2.1	7 900	2.1	9 100	2.1
HHP019T4	40	3 070	1.3	3 680	1.4	4 450	1.5	5 400	1.5	6 520	1.6	7 810	1.7	9 270	1.7	10 900	1.7	12 690	1.7
	50	3 180	1.7	3 680	1.7	4 340	1.8	5 180	1.9	6 180	1.9	7 340	2.0	8 670	2.1	10 160	2.2	11 830	2.2
	60	-	-	-	-	4 660	2.3	5 300	2.4	6 110	2.4	7 070	2.5	8 200	2.6	9 480	2.7	10 930	2.8
HHP021T4	40	3 530	1.4	4 250	1.5	5 090	1.6	6 080	1.7	7 230	1.7	8 570	1.8	10 100	1.8	11 840	1.7	13 820	1.7
	50	3 430	1.6	4 080	1.8	4 860	1.9	5 770	2.0	6 830	2.1	8 070	2.1	9 500	2.2	11 140	2.2	13 000	2.2
	60	-	-	-	-	4 710	2.2	5 530	2.3	6 510	2.5	7 650	2.6	8 970	2.7	10 490	2.8	12 240	2.8
HHP026T4	40	4 540	1.7	5 410	1.9	6 440	2.0	7 650	2.1	9 070	2.1	10 740	2.2	12 690	2.2	14 950	2.1	17 550	2.0
	50	4 590	2.0	5 350	2.1	6 260	2.3	7 330	2.4	8 610	2.6	10 120	2.6	11 900	2.7	13 970	2.7	16 370	2.7
	60	-	-	-	-	6 240	2.7	7 150	2.9	8 250	3.0	9 560	3.2	11 130	3.3	12 980	3.3	15 150	3.3
HHP030T4	40	4 910	2.1	6 100	2.3	7 480	2.4	9 050	2.6	10 830	2.6	12 830	2.7	15 060	2.7	17 520	2.8	20 240	2.9
	50	4 830	2.3	5 940	2.6	7 230	2.8	8 690	3.0	10 350	3.1	12 200	3.2	14 270	3.4	16 560	3.5	19 090	3.6
	60	-	-	-	-	7 000	3.1	8 330	3.4	9 850	3.6	11 550	3.8	13 440	4.0	15 540	4.2	17 870	4.4
HHP038T4	40	6 150	2.4	7 600	2.8	9 360	3.0	11 390	3.2	13 660	3.2	16 130	3.3	18 750	3.3	21 510	3.4	24 360	3.6
	50	5 730	2.2	7 120	2.8	8 800	3.3	10 740	3.6	12 890	3.8	15 220	4.0	17 700	4.1	20 280	4.2	22 940	4.4
	60	-	-	-	-	8 090	3.2	9 930	3.8	11 970	4.2	14 170	4.5	16 500	4.7	18 920	5.0	21 400	5.2
HHP045T4	40	7 110	3.0	8 800	3.1	10 830	3.3	13 180	3.5	15 800	3.7	18 660	3.8	21 700	3.9	24 890	3.8	28 180	3.7
	50	6 630	3.5	8 240	3.7	10 190	3.9	12 420	4.2	14 910	4.4	17 610	4.6	20 480	4.7	23 460	4.8	26 540	4.8
	60	-	-	-	-	9 360	4.5	11 490	4.8	13 850	5.1	16 400	5.5	19 100	5.7	21 890	6.0	24 760	6.1

Legend: To: Evaporating temperature in °C; Tc: Condensing temperature in °C; H: Heating capacity in W; Pe: Power input in kW; Superheat = 5 K; Subcooling = 5 K

Nomenclature

Type	Size	Motor	Features
HHP	030	T4L	P6

Application:
H: high temperature

Family:
HP: heat pump R407C PVE

Nominal capacity:

Model variation
T motor design

Other features

	Oil sight glass	Oil equalisation	Oil drain	LP gauge port	Gas equalisation port
6	None	None	None	None	None

Tubing and electrical connections
P: brazed connections, spade terminals
C: brazed connections, screw terminals

Motor protection
L: internal motor protection

Motor voltage code
4: 380-400V/3~/50 Hz
5: 220-240V/1~/50 Hz

Notes

Reciprocating compressors – Variable speed

VTZ038 / VTZ054

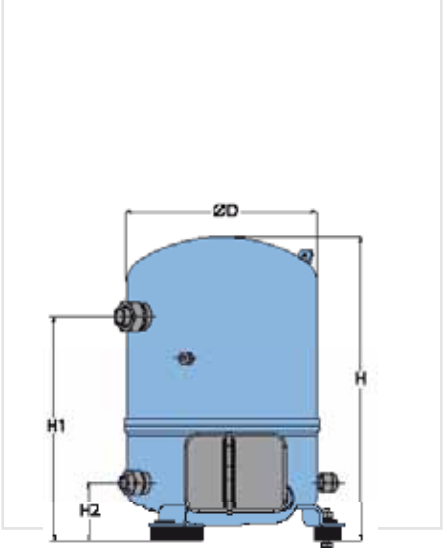

VTZ086 / VTZ121

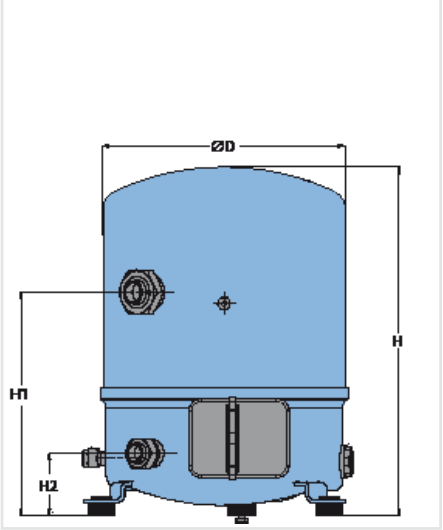

VTZ171 / VTZ215 / VTZ242

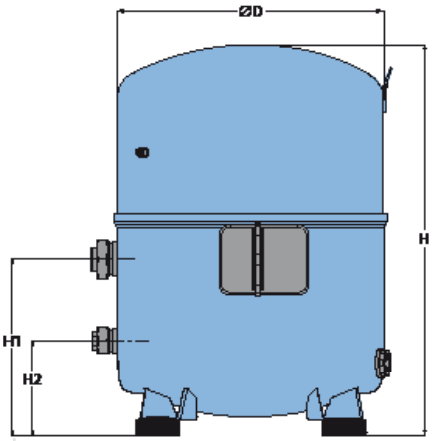

Type	Cylinders	Dimensions (mm)			
		D	H	H1	H2
VTZ038 / VTZ054	1	224	356	263	68
VTZ086 / VTZ121	2	288	413	265	74
VTZ171 / VTZ215 / VTZ242	4	352	518	233	125

Compressor nomenclature

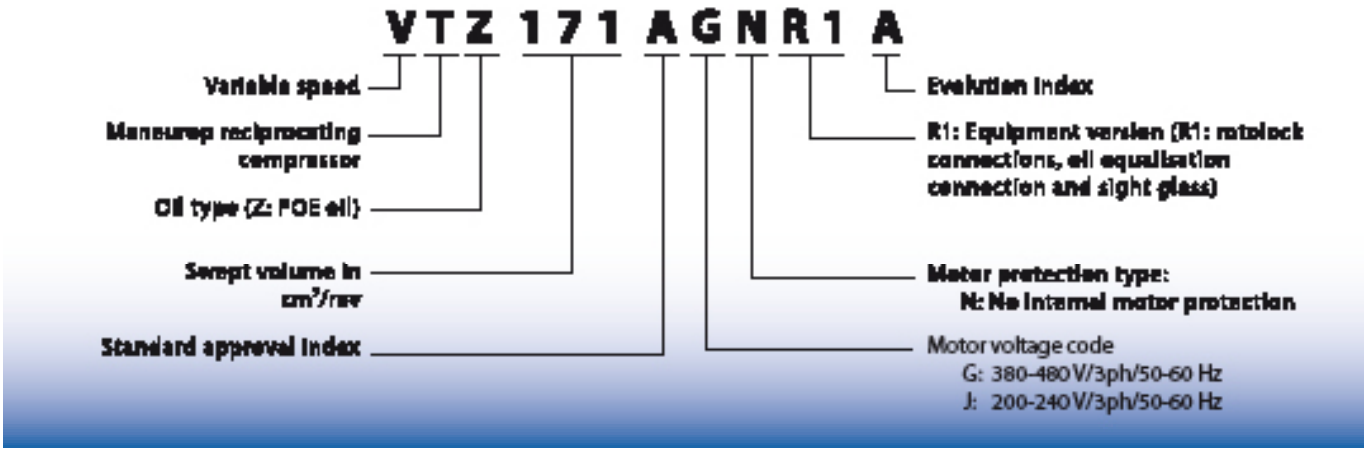

Frequency converter nomenclature

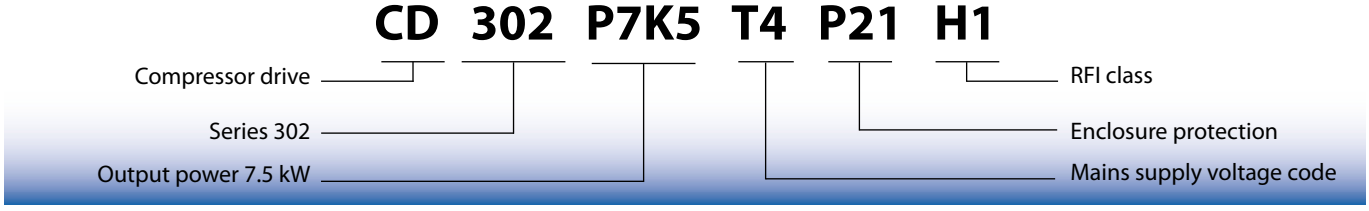

Drive supply voltage	Drive power (kW)	Compressor voltage code	Compressor model	IP20			IP21			IP55		
				Drive enclosure	Overall dimension (hxwxd) mm	Weight (kg)	Drive enclosure	Overall dimension (hxwxd) mm	Weight (kg)	Drive enclosure	Overall dimension (hxwxd) mm	Weight (kg)
T4 : 380-480/3/50-60	4	G	VTZ038	A2	268×90×205	4.9	-	-	-	A5	420×242×200	13.5
	5.5		VTZ054	A3	268×130×205	6.6	-	-	-	A5	420×242×200	13.5
	7.5		VTZ086	A3	268×130×205	6.6	-	-	-	A5	420×242×200	13.5
	11		VTZ121	B3	399×165×248	12	B1	494×242×260	23	B1	480×242×260	23
	15		VTZ171	B3	399×165×248	12	B1	494×242×260	23	B1	480×242×260	23
	18.5		VTZ215	B4	518×231×242	23	B2	664×242×260	27	B2	650×242×260	27
	22		VTZ242	-	-	-	B2	664×242×260	27	B2	650×242×260	27

Code numbers for ordering single pack compressors and frequency converters

Compressor		Frequency converter				
Model	Code No.	Model & power	IP class	RFI class*	LCP**	Code No.
VTZ038-G	120B0001	CD302 4.0 kW	IP20	H1	yes	131B3543
			IP55	H1	yes	131B3547
VTZ054-G	120B0002	CD302 5.5 kW	IP20	H1	yes	131B3552
			IP55	H1	yes	131B3556
VTZ086-G	120B0003	CD302 7.5 kW	IP20	H1	yes	131B3560
			IP55	H1	yes	131B3564
VTZ121-G	120B0004	CD302 11.0 kW	IP21	H1	yes	131B3568
			IP55	H1	yes	131B3572
VTZ171-G	120B0005	CD302 15.0 kW	IP21	H1	yes	131B3576
			IP55	H1	yes	131B3580
VTZ215-G	120B0006	CD302 18.5 kW	IP21	H1	yes	131B3584
			IP55	H1	yes	131B3588
VTZ242-G	120B0007	CD302 22.0 kW	IP21	H1	yes	131B3592
			IP55	H1	yes	131B3596

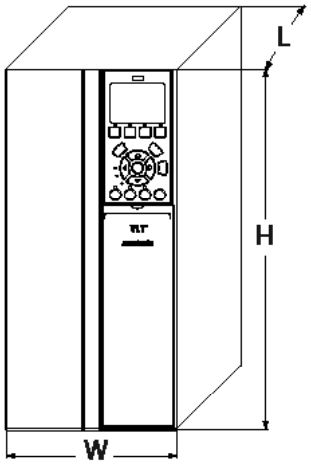

Listed code numbers are for compressors with voltage code G and frequency converters with supply voltage code T4 (380-400 V/3ph/50-60Hz). VTZ038 to VTZ121 are available with voltage code J (200-240V/3ph/50-60Hz) on request.
* RFI class H2 available on request
** Models without LCP available on request

Reciprocating compressors – variable speed

R404A

	To	-30		-25		-20		-15		-10		-5		0		5	
	Tc	Qo	Pe	Qo	Pe	Qo	Pe	Qo	Pe	Qo	Pe	Qo	Pe	Qo	Pe	Qo	Pe
VTZ038																	
Min rpm	20	1 090	0.61	1 430	0.67	1 850	0.71	2 350	0.74	2 950	0.76	3 650	0.77	-	-	-	-
	40	610	0.64	850	0.75	1 140	0.85	1 500	0.94	1 920	1.02	2 430	1.09	3 030	1.14	3 730	1.18
	60	-	-	-	-	530	0.92	750	1.08	1 010	1.23	1 320	1.37	1 700	1.50	2 160	1.61
Max rpm	20	2 200	1.75	3 080	2.01	4 160	2.22	5 450	2.39	6 990	2.51	8 790	2.57	-	-	-	-
	40	1 140	1.60	1 860	2.03	2 710	2.43	3 740	2.78	4 960	3.10	6 400	3.37	8 070	3.60	10 010	3.78
	60	-	-	-	-	1 190	2.11	1 860	2.66	2 670	3.17	3 640	3.65	4 810	4.09	6 190	4.49
VTZ054																	
Min rpm	20	1 480	0.88	1 970	0.97	2 590	1.05	3 370	1.11	4 310	1.16	5 450	1.18	-	-	-	-
	40	920	0.96	1 260	1.11	1 690	1.25	2 220	1.38	2 890	1.50	3 700	1.60	4 670	1.69	5 820	1.76
	60	-	-	-	-	900	1.37	1 220	1.57	1 610	1.77	2 110	1.96	2 730	2.13	3 490	2.29
Max rpm	20	3 740	2.45	4 870	2.76	6 250	3.06	7 910	3.34	9 880	3.61	12 210	3.84	-	-	-	-
	40	2 170	2.43	3 090	2.84	4 190	3.28	5 520	3.72	7 110	4.15	9 000	4.59	11 210	5.02	13 800	5.43
	60	-	-	-	-	1 950	3.15	2 800	3.73	3 850	4.32	5 150	4.94	6 720	5.56	8 600	6.19
VTZ086																	
Min rpm	20	1 840	1.18	2 580	1.31	3 520	1.42	4 660	1.49	6 030	1.54	7 650	1.56	-	-	-	-
	40	930	1.16	1 420	1.42	2 040	1.66	2 800	1.85	3 720	2.02	4 830	2.16	6 140	2.27	7 670	2.35
	60	-	-	-	-	950	1.67	1 390	2.03	1 930	2.36	2 580	2.65	3 380	2.91	4 330	3.14
Max rpm	20	6 160	3.89	8 310	4.34	10 950	4.74	14 130	5.09	17 890	5.40	22 290	5.66	-	-	-	-
	40	3 640	3.91	5 360	4.66	7 440	5.35	9 920	5.99	12 830	6.58	16 250	7.11	20 190	7.60	24 730	8.03
	60	-	-	-	-	3 420	5.16	5 060	6.15	6 990	7.08	9 280	7.96	11 970	8.78	15 110	9.55
VTZ121																	
Min rpm	20	2 750	1.89	3 660	2.05	4 810	2.19	6 230	2.30	7 940	2.39	9 980	2.46	-	-	-	-
	40	1 770	2.10	2 480	2.38	3 360	2.64	4 430	2.86	5 730	3.06	7 280	3.24	9 120	3.39	11 280	3.51
	60	-	-	-	-	1 650	2.82	2 300	3.21	3 090	3.57	4 070	3.90	5 270	4.20	6 700	4.48
Max rpm	20	8 060	5.47	10 760	6.11	14 150	6.73	18 330	7.32	23 400	7.85	29 440	8.31	-	-	-	-
	40	4 870	5.67	6 870	6.50	9 350	7.38	12 420	8.29	16 170	9.20	20 690	10.10	26 100	10.99	32 470	11.84
	60	-	-	-	-	4 860	7.52	6 750	8.62	9 120	9.79	12 070	11.02	15 690	12.29	20 070	13.58
VTZ171																	
Min rpm	20	3 900	2.31	5 360	2.59	7 180	2.83	9 400	3.04	12 050	3.20	15 160	3.31	-	-	-	-
	40	2 090	2.31	3 090	2.72	4 340	3.11	5 870	3.47	7 720	3.81	9 910	4.10	12 500	4.36	15 500	4.57
	60	-	-	-	-	2 070	3.24	2 940	3.84	4 010	4.41	5 320	4.97	6 900	5.49	8 790	5.98
Max rpm	20	11 310	7.31	15 890	8.35	21 460	9.26	28 030	10.05	35 630	10.73	44 290	11.32	-	-	-	-
	40	6 400	7.24	9 960	9.03	14 240	10.66	19 260	12.14	25 040	13.50	31 610	14.73	38 980	15.87	47 190	16.93
	60	-	-	-	-	6 470	9.78	9 910	12.09	13 850	14.25	18 310	16.27	23 310	18.16	28 870	19.95
VTZ215																	
Min rpm	20	4 790	3.00	6 690	3.31	9 050	3.58	11 940	3.79	15 400	3.95	19 490	4.04	-	-	-	-
	40	2 690	3.24	4 070	3.78	5 760	4.28	7 820	4.74	10 310	5.15	13 270	5.51	16 750	5.80	20 820	6.03
	60	-	-	-	-	2 800	4.52	4 060	5.30	5 600	6.03	7 450	6.72	9 670	7.36	12 330	7.95
Max rpm	20	15 190	9.71	20 520	11.10	27 020	12.40	34 830	13.62	44 110	14.73	54 990	15.73	-	-	-	-
	40	9 030	9.79	13 430	11.78	18 700	13.76	25 000	15.73	32 450	17.67	41 210	19.58	51 430	21.44	63 230	23.24
	60	-	-	-	-	8 910	13.17	12 970	15.77	17 900	18.43	23 830	21.13	30 910	23.85	39 290	26.60
VTZ242																	
Min rpm	20	5 250	3.37	7 200	3.70	9 630	4.00	12 580	4.26	16 110	4.47	20 280	4.65	-	-	-	-
	40	3 100	3.56	4 540	4.08	6 320	4.57	8 480	5.04	11 070	5.46	14 150	5.85	17 780	6.19	21 990	6.48
	60	-	-	-	-	3 100	4.97	4 380	5.76	5 950	6.53	7 870	7.26	10 180	7.95	12 940	8.60
Max rpm	20	14 950	9.71	20 550	11.09	27 650	12.42	36 470	13.62	47 190	14.64	60 020	15.42	-	-	-	-
	40	9 100	10.23	13 060	11.98	18 020	13.87	24 160	15.83	31 690	17.79	40 800	19.70	51 700	21.50	64 590	23.12
	60	-	-	-	-	9 700	14.41	13 510	16.74	18 180	19.27	23 920	21.93	30 930	24.67	39 410	27.42

To: Evaporating temperature in °C
Superheat = 10 K

Tc: Condensing temperature in °C
Subcooling = 0 K

Qo: Cooling capacity in W

Pe: Power input in kW

Min rpm: Minimum rotation speed
Max rpm: Maximum rotation speed

Reciprocating compressors – variable speed

R407C

	To	-17.5		-15		-10		-5		0		5		10		15	
	Tc	Qo	Pe	Qo	Pe	Qo	Pe	Qo	Pe	Qo	Pe	Qo	Pe	Qo	Pe	Qo	Pe
VTZ038																	
Min rpm	20	1 780	0.66	2 030	0.68	2 610	0.71	3 310	0.72	4 140	0.72	-	-	-	-	-	-
	40	1 150	0.76	1 340	0.82	1 790	0.93	2 330	1.01	2 980	1.08	3 730	1.13	4 620	1.17	5 640	1.20
	60	-	-	-	-	-	-	1 390	1.18	1 840	1.34	2 390	1.48	3 030	1.61	3 780	1.73
Max rpm	20	4 050	1.68	4 620	1.79	5 970	2.00	7 650	2.19	9 720	2.35	-	-	-	-	-	-
	40	2 780	1.91	3 260	2.06	4 360	2.37	5 700	2.68	7 350	2.98	9 360	3.26	11 790	3.51	14 700	3.73
	60	-	-	-	-	-	-	3 580	2.98	4 760	3.40	6 230	3.81	8 020	4.21	10 210	4.59
VTZ054																	
Min rpm	20	2 350	0.87	2 680	0.90	3 460	0.94	4 400	0.97	5 530	0.99	-	-	-	-	-	-
	40	1 590	1.06	1 850	1.13	2 460	1.26	3 190	1.36	4 080	1.44	5 150	1.51	6 400	1.56	7 870	1.60
	60	-	-	-	-	-	-	1 910	1.65	2 520	1.86	3 270	2.04	4 170	2.20	5 250	2.33
Max rpm	20	5 770	2.54	6 620	2.70	8 650	3.01	11 180	3.28	14 300	3.51	-	-	-	-	-	-
	40	4 080	2.81	4 740	3.05	6 290	3.53	8 220	4.01	10 590	4.48	13 490	4.93	17 000	5.33	21 180	5.69
	60	-	-	-	-	-	-	5 410	4.26	7 080	4.93	9 140	5.62	11 670	6.29	14 740	6.96
VTZ086																	
Min rpm	20	3 140	1.10	3 680	1.14	4 970	1.19	6 550	1.22	8 450	1.24	-	-	-	-	-	-
	40	1 800	1.36	2 180	1.47	3 050	1.66	4 100	1.81	5 350	1.93	6 850	2.02	8 610	2.09	10 670	2.14
	60	-	-	-	-	-	-	2 390	2.13	3 270	2.45	4 280	2.71	5 440	2.93	6 790	3.12
Max rpm	20	8 900	3.71	10 190	3.86	13 360	4.11	17 450	4.31	22 630	4.44	-	-	-	-	-	-
	40	6 700	4.48	7 660	4.72	9 910	5.19	12 710	5.65	16 230	6.07	20 650	6.45	26 130	6.76	32 830	7.00
	60	-	-	-	-	-	-	8 910	6.66	11 330	7.35	14 270	8.03	17 900	8.69	22 400	9.31
VTZ121																	
Min rpm	20	4 520	1.58	5 230	1.66	6 890	1.77	8 890	1.84	11 260	1.85	-	-	-	-	-	-
	40	2 990	1.96	3 550	2.11	4 830	2.39	6 370	2.62	8 200	2.80	10 360	2.94	12 890	3.02	15 820	3.04
	60	-	-	-	-	-	-	4 070	3.23	5 370	3.58	6 910	3.89	8 740	4.15	10 890	4.35
Max rpm	20	13 480	5.40	15 370	5.71	19 760	6.33	25 030	6.98	31 290	7.64	-	-	-	-	-	-
	40	9 440	6.08	10 940	6.48	14 430	7.28	18 690	8.09	23 800	8.92	29 860	9.77	36 960	10.64	45 210	11.52
	60	-	-	-	-	-	-	12 430	9.03	16 140	10.13	20 670	11.23	26 120	12.35	32 570	13.49
VTZ171																	
Min rpm	20	5 980	2.20	6 880	2.27	9 030	2.38	11 660	2.45	14 850	2.47	-	-	-	-	-	-
	40	4 150	2.83	4 890	3.00	6 630	3.31	8 760	3.59	11 350	3.84	14 460	4.03	18 140	4.19	22 460	4.28
	60	-	-	-	-	-	-	5 310	4.38	7 120	4.93	9 340	5.44	12 040	5.92	15 290	6.34
Max rpm	20	18 360	7.46	21 080	7.82	27 350	8.46	34 810	9.00	43 610	9.43	-	-	-	-	-	-
	40	13 130	8.82	15 560	9.47	21 090	10.71	27 620	11.87	35 290	12.95	44 230	13.96	54 570	14.89	66 440	15.73
	60	-	-	-	-	-	-	18 270	13.52	24 250	15.29	31 300	17.01	39 550	18.67	49 150	20.29
VTZ215																	
Min rpm	20	8 120	2.86	9 230	2.96	11 840	3.13	15 050	3.26	18 950	3.37	-	-	-	-	-	-
	40	5 820	3.70	6 760	3.93	8 930	4.34	11 550	4.70	14 730	5.00	18 540	5.26	23 070	5.47	28 430	5.64
	60	-	-	-	-	-	-	7 390	5.87	9 680	6.54	12 480	7.14	15 870	7.68	19 930	8.15
Max rpm	20	24 800	10.30	28 360	10.93	36 500	12.14	46 160	13.25	57 500	14.22	-	-	-	-	-	-
	40	17 530	11.38	20 580	12.27	27 520	14.11	35 690	15.96	45 260	17.81	56 390	19.60	69 250	21.30	84 000	22.87
	60	-	-	-	-	-	-	24 100	17.85	31 600	20.42	40 380	23.06	50 610	25.73	62 450	28.40
VTZ242																	
Min rpm	20	8 590	3.14	10 010	3.26	13 380	3.44	17 490	3.57	22 450	3.63	-	-	-	-	-	-
	40	5 950	3.89	7 030	4.14	9 570	4.59	12 670	5.00	16 420	5.35	20 900	5.65	26 180	5.89	32 360	6.06
	60	-	-	-	-	-	-	8 430	6.25	11 020	6.97	14 150	7.64	17 900	8.26	22 360	8.82
Max rpm	20	25 910	10.61	29 800	11.26	38 790	12.50	49 510	13.63	62 150	14.62	-	-	-	-	-	-
	40	18 310	11.71	21 550	12.65	28 870	14.52	37 510	16.37	47 620	18.15	59 390	19.84	72 980	21.41	88 590	22.84
	60	-	-	-	-	-	-	25 460	18.18	33 080	20.70	41 910	23.20	52 140	25.66	63 940	28.05

To: Evaporating temperature in °C
Superheat = 10 K

Tc: Condensing temperature in °C
Subcooling = 0 K

Qo: Cooling capacity in W

Pe: Power input in kW

Min rpm: Minimum rotation speed
Max rpm: Maximum rotation speed

Reciprocating compressors – variable speed

R134a

	To	-15		-10		-5		0		5		10		15	
	Tc	Qo	Pe	Qo	Pe	Qo	Pe	Qo	Pe	Qo	Pe	Qo	Pe	Qo	Pe
VTZ038															
Min rpm	35	840	0.51	1 110	0.58	1 460	0.64	1 900	0.69	2 430	0.72	3 090	0.74	3 880	0.74
	45	660	0.52	920	0.61	1 230	0.68	1 620	0.75	2 100	0.81	2 690	0.85	3 420	0.88
	65	-	-	-	-	-	-	1 040	0.84	1 400	0.93	1 850	1.01	2 420	1.09
Max rpm	35	2 340	1.37	3 130	1.54	4 110	1.69	5 340	1.81	6 850	1.90	8 700	1.97	10 930	2.00
	45	1 860	1.41	2 560	1.63	3 440	1.83	4 530	2.00	5 890	2.15	7 560	2.27	9 580	2.35
	65	-	-	-	-	-	-	2 920	2.23	3 930	2.48	5 200	2.71	6 780	2.92
VTZ054															
Min rpm	35	1 280	0.71	1 720	0.79	2 250	0.86	2 880	0.93	3 620	1.00	4 490	1.06	5 490	1.11
	45	1 050	0.74	1 440	0.84	1 910	0.93	2 470	1.03	3 140	1.12	3 910	1.20	4 800	1.28
	65	-	-	-	-	-	-	1 670	1.18	2 170	1.31	2 750	1.45	3 430	1.59
Max rpm	35	3 590	1.88	4 820	2.09	6 300	2.29	8 070	2.48	10 160	2.66	12 600	2.81	15 410	2.94
	45	2 940	1.98	4 040	2.23	5 360	2.49	6 940	2.74	8 790	2.98	10 970	3.21	13 480	3.42
	65	-	-	-	-	-	-	4 680	3.13	6 070	3.49	7 720	3.86	9 640	4.23
VTZ086															
Min rpm	35	1 660	0.96	2 280	1.08	3 030	1.17	3 930	1.24	4 990	1.30	6 240	1.33	7 690	1.36
	45	1 330	0.99	1 880	1.15	2 550	1.27	3 350	1.38	4 290	1.48	5 410	1.56	6 700	1.63
	65	-	-	-	-	-	-	2 150	1.57	2 850	1.73	3 670	1.88	4 650	2.02
Max rpm	35	5 430	2.99	7 440	3.38	9 900	3.67	12 860	3.88	16 380	4.03	20 500	4.12	25 300	4.17
	45	4 370	3.06	6 170	3.56	8 350	3.98	10 970	4.32	14 080	4.61	17 740	4.84	22 000	5.04
	65	-	-	-	-	-	-	7 050	4.90	9 340	5.37	12 050	5.80	15 230	6.22
VTZ121															
Min rpm	35	2 620	1.33	3 360	1.46	4 250	1.59	5 330	1.71	6 610	1.83	8 130	1.93	9 900	2.02
	45	2 240	1.44	2 900	1.61	3 710	1.78	4 690	1.93	5 860	2.08	7 240	2.23	8 860	2.36
	65	-	-	-	-	-	-	3 190	2.29	4 070	2.53	5 130	2.76	6 400	2.99
Max rpm	35	7 850	3.88	10 050	4.27	12 730	4.65	15 960	5.01	19 810	5.33	24 350	5.61	29 640	5.84
	45	6 690	4.21	8 680	4.69	11 100	5.17	14 030	5.64	17 530	6.09	21 680	6.52	26 540	6.90
	65	-	-	-	-	-	-	9 550	6.67	12 170	7.36	15 350	8.05	19 160	8.73
VTZ171															
Min rpm	35	3 220	2.04	4 460	2.22	5 980	2.36	7 800	2.48	9 970	2.57	12 520	2.66	15 470	2.76
	45	2 500	2.12	3 600	2.39	4 940	2.61	6 550	2.79	8 470	2.94	10 730	3.07	13 370	3.19
	65	-	-	-	-	-	-	4 070	3.26	5 470	3.60	7 150	3.90	9 130	4.16
Max rpm	35	11 120	6.17	15 050	7.09	19 760	7.89	25 350	8.55	31 900	9.05	39 520	9.39	48 310	9.54
	45	8 810	6.21	12 420	7.31	16 730	8.35	21 830	9.32	27 830	10.20	34 820	10.99	42 900	11.66
	65	-	-	-	-	-	-	14 050	10.01	18 690	11.25	24 160	12.53	30 570	13.83
VTZ215															
Min rpm	35	4 680	2.68	6 190	2.94	8 010	3.17	10 160	3.38	12 690	3.60	15 630	3.84	19 030	4.11
	45	3 880	2.84	5 260	3.19	6 910	3.49	8 860	3.75	11 160	4.01	13 830	4.26	16 930	4.52
	65	-	-	-	-	-	-	6 000	4.34	7 770	4.79	9 850	5.20	12 290	5.58
Max rpm	35	15 310	8.39	20 250	9.17	26 180	9.90	33 210	10.60	41 480	11.30	51 110	12.05	62 220	12.86
	45	12 700	8.86	17 230	9.89	22 630	10.83	29 030	11.70	36 560	12.55	45 340	13.39	55 480	14.26
	65	-	-	-	-	-	-	19 640	13.47	25 450	14.83	32 290	16.11	40 280	17.34
VTZ242															
Min rpm	35	5 530	2.59	7 080	2.86	8 970	3.11	11 250	3.35	13 970	3.58	17 160	3.79	20 890	3.99
	45	4 710	2.83	6 110	3.16	7 820	3.48	9 880	3.78	12 350	4.08	15 260	4.36	18 680	4.62
	65	-	-	-	-	-	-	6 730	4.49	8 570	4.96	10 810	5.42	13 470	5.86
Max rpm	35	16 550	7.61	21 180	8.40	26 840	9.15	33 670	9.84	41 810	10.49	51 420	11.08	62 640	11.60
	45	14 120	8.30	18 300	9.28	23 410	10.23	29 590	11.14	36 980	11.99	45 740	12.80	56 020	13.55
	65	-	-	-	-	-	-	20 170	13.15	25 710	14.50	32 410	15.81	40 430	17.08

To: Evaporating temperature in °C
Superheat = 10 K

Tc: Condensing temperature in °C
Subcooling = 0 K

Qo: Cooling capacity in W

Pe: Power input in kW

Min rpm: Minimum rotation speed
Max rpm: Maximum rotation speed

Notes

Notes

Optyma™ condensing units

Danfoss Optyma™ condensing units perfectly suit applications like:

- Cold stores and freezer rooms
- Milk cooling
- Beer and wine cellars
- Small food retail and mini markets
- Garage forecourt shops
- Display cabinets
- Ice cream freezers
- Bottle coolers
- Air driers
- Residential air conditioning

Optyma™ the most reliable and efficient condensing units for the widest application range

Optyma™ is the widest range of hermetic condensing units on the market.
Optyma™ condensing unit is available with high capacity models of reciprocating and scroll compressors so to cover a large range of commercial refrigeration applications, reducing costs and complexity of the systems.
All Optyma™ condensing units are extremely efficient and reliable. That means less energy consumption and less running costs, less cost for service and maintenance. Thanks to scroll compressors, Optyma™ offers also the best solution for applications where noise and vibration are relevant for the system and the environment where it is installed.

Optyma™ with scroll is a real multi refrigerant condensing unit. It can be used with R404A/R507/R134a/R407C refrigerants, so that you can really optimize your stock.
In addition to the wide Optyma™ range we also include local support and guidance if needed. A network of partner wholesalers and local Danfoss teams can offer you help and will do their utmost to fulfil your needs. At Danfoss we simply believe it is important to offer an "Optimum service".

Features	Customer benefits
· HFC refrigerants R134a, R404A and R507 (MCZC and MGZC are suitable for use with R407C) · Capacity: from a few to 20000 Watt (R404A) · High COP · Low noise and low vibration (Scroll compressors) · 100% factory tested for leakage · High efficient compressors (MBP + LBP) · Low energy consumption · Wide application range · Powder coated steel parts · Crankcase heater standard (optional for fractional units) · Service valves standard with access ports · Access valves/stubs for easy connection	· High-efficiency condensers allowing an extended application envelope in higher ambient conditions as standard · Low electrical consumption and low running cost · Reliable components for longer life and less warranty call out costs · Fully pre-wired and factory tested, reducing commissioning time on site · Built-in grab handles for easier handling on site · Base plate designed to allow easy mounting on wall brackets · Flexible add-on design options including: fan speed control, oil separator, pressure switches or weather proof housing · Easy access to all components for higher serviceability and simplified maintenance · Compact dimensions and minimum foot print for easy handling, shipping and installation · More reliable and silent system due to less vibration and less noise of scroll compressor

Optyma™ condensing units – R404A/R507 LBP Reciprocating

Nbr of fans	Test conditions	Unit	Version					Electrical code	Compressor	Amb. temp. °C	Capacity range in [W] at evaporating-temperature [°C]				Power consumption (W) at -25 evap temp	Application range [°C]
			A00	A01	A02	A04	A05				-35°C	-30°C	-25°C	-20°C		
	CECOMAF	OP-LCHC004	114X1208	114X1209		114X1211	114X1210	G	TL4CLX	32°C	110	141	177	218	162	38°C: -45°C till -5°C 43°C: -45°C till -15°C
		OP-LCHC006	114X1216	114X1217		114X1219	114X1218	G	FR6CLX	32°C	171	219	273	332	267	38°C: -45°C till -15°C 43°C: -45°C till -30°C
		OP-LCHC008	114X1324	114X1325		114X1327	114X1326	G	FR8.5CLX	32°C	208	268	340	420	336	38°C: -45°C till -10°C 43°C: -45°C till -23.3°C
		OP-LCHC007	114X1328	114X1329		114X1331	114X1330	G	NL7CLX	32°C	234	302	380	497	336	38°C: -45°C till -10°C 43°C: -45°C till -25°C
		OP-LCHC008	114X1304	114X1305		114X1307	114X1306	G	NL8.4CLX	32°C	252	325	407	498	295	38°C: -45°C till -15°C 43°C: -45°C till -25°C
		OP-LCHC010	114X1332	114X1333		114X1335	114X1334	G	SC10CLX	32°C	216	300	393	496	373	38°C: -35°C till -15°C 43°C: -35°C till -25°C
		OP-LCHC012	114X1440	114X1441		114X1443	114X1442	G	SC12CLX	32°C	320	429	547	672	479	38°C: -45°C till -20°C 43°C: -45°C till -30°C
		OP-LCHC012	114X1444	114X1445		114X1447	114X1446	G	SC12CLX.2	32°C	342	438	545	663	473	38°C: -45°C till -20°C 43°C: -45°C till -35°C
		OP-LCHC015	114X1548	114X1549		114X1551	114X1550	G	SC15CLX	32°C	400	521	654	799	558	38°C: -45°C till -23.3°C 43°C: -45°C till -30°C
		OP-LCHC015	114X1552	114X1553		114X1555	114X1554	G	SC15CLX.2	32°C	413	528	657	798	563	38°C: -45°C till -25°C 43°C: -45°C till -35°C
		OP-LCHC018	114X1556	114X1557		114X1559	114X1558	G	SC18CLX	32°C	475	610	751	899	649	38°C: -45°C till -25°C 43°C: -45°C till -35°C
		OP-LCHC018	114X1560	114X1561		114X1563	114X1562	G	SC18CLX.2	32°C	486	618	764	921	683	38°C: -45°C till -25°C 43°C: -45°C till -35°C
		OP-LCHC021	114X1564	114X1565		114X1567	114X1566	G	SC21CLX	32°C	535	680	840	1014	754	38°C: -45°C till -30°C
	RGT20	OP-LCHC026	114X1672	114X1673		114X1675	114X1674	G	GS26CLX	32°C	670	860	1070	1290	1023	38°C: -45°C till -23.3°C 43°C: -45°C till -35°C
		OP-LCHC034	114X1780	114X1781		114X1783	114X1782	G	GS34CLX	32°C	850	1100	1350	1625	1170	38°C: -45°C till -30°C
	SH10	OP-LCHC048			114X5044			G	NTZ048	27°C	1120	1490	1900	2320	887	
					114X5030			D		38°C	840	1150	1470	1810	835	
					114X5037			E		43°C	710	990	1280	1580	795	
		OP-LCHC068			114X5045			G	NTZ068	27°C	1980	2560	3200	3890	1483	
					114X5031			D		38°C	1530	2020	2540	3110	1543	
					114X5038			E		43°C	1350	1790	2270	2780	1563	
		OP-LCHC096			114X5032			D	NTZ096	27°C	2280	3000	3820	4750	1771	
					114X5039			E		38°C	1690	2270	2950	3700	1674	
										43°C	1410	1940	2540	3220	1607	
		OP-LCHC108			114X5033			D	NTZ108	27°C	2780	3640	4600	5640	2097	
					114X5040			E		38°C	2090	2810	3590	4430	2031	
										43°C	1780	2430	3140	3890	1966	
		OP-LCHC136			114X5034			D	NTZ136	27°C	3560	4600	5770	7050	2910	
					114X5041			E		38°C	2740	3610	4570	5610	2857	
										43°C	2370	3160	4020	4960	2824	
		OP-LCHC215			114X5035			D	NTZ215	27°C	5480	7080	8850	10750	4159	
					114X5042			E		38°C	4090	5440	6900	8450	4059	
										43°C	3430	4660	5980	7380	3929	
		OP-LCHC271			114X5036			D	NTZ271	27°C	7390	9450	11700	14100	5584	
					114X5043			E		38°C	5760	7450	9270	11180	5661	
										43°C	4990	6520	8140	9820	5632	46°C: -20°C till -35°C 43°C: -15°C till -40°C
		OP-LGHC048			114X5096			G	NTZ048	27°C	1160	1550	1990	2450	891	
					114X5089			E		38°C	870	1200	1550	1920	842	
										43°C	740	1030	1350	1680	804	
		OP-LGHC068			114X5097			G	NTZ068	27°C	1940	2500	3120	3780	1488	
					114X5083			D		38°C	1510	1970	2480	3020	1546	
					114X5090			E		43°C	1330	1750	2210	2700	1565	
		OP-LGHC096			114X5084			D	NTZ096	27°C	2290	3020	3850	4790	1772	
					114X5091			E		38°C	1700	2290	2970	3730	1676	
										43°C	1420	1950	2560	3250	1610	
		OP-LGHC108			114X5085			D	NTZ108	27°C	2840	3730	4740	5840	2097	
					114X5092			E		38°C	2140	2890	3710	4610	2039	
										43°C	1830	2510	3250	4050	1977	
		OP-LGHC136			114X5086			D	NTZ136	27°C	3660	4750	5980	7350	2911	
					114X5093			E		38°C	2830	3740	4760	5890	2865	
										43°C	2450	3280	4200	5220	2831	
		OP-LGHC215			114X5087			D	NTZ215	27°C	5770	7520	9490	11670	4147	
					114X5094			E		38°C	4370	5860	7520	9330	4098	
										43°C	3690	5050	6570	8210	3986	
		OP-LGHC271			114X5088			D	NTZ271	27°C	7570	9730	12110	14690	5564	
					114X5095			E		38°C	5930	7710	9660	11730	5662	
										43°C	5150	6770	8510	10350	5642	

Test condition

EN13215	SH10	RGT 20	CECOMAF
Ambient temperature	32°C	32°C	32°C
Suction gas temperature		20°C	32°C
Superheat	10K		

Electrical code

D Compressor 400 V/3 phase/50 Hz, fan 400 V/3 phase/50 Hz
E Compressor 400 V/3 phase/50 Hz, fan 230 V/1 phase/50 Hz
G Compressor 230 V/1 phase/50 Hz, fan 230 V/1 phase/50 Hz

Version:
A00: Without valves and receiver for capillary tubes
A01: With receiver, 2 stop valves, brackets and copper pipes for KP
A02: With receiver, stop valve, universal pressure switch, (KP17WB), flexible hoses and electrical box
A04: A01 + KP17WB + FSA-kit + power cord (except LCH034)
A05: A01 but solder valve for inch tubes

Optyma™ condensing units – R404A/R507 LBP Reciprocating

Unit	Condenser coil			Condenser fan	Receiver volume [L]	Dimensions [mm]						Weight [kg]	
	Type	Air flow [m³/h]	Int. volume [dm³]	Fan blade Ø [mm]		Fig.	Height H [mm]	Width W [mm]	Length D [mm]	Suction line	Liquid line	Gross	Net
OP-LCHC004	BG2	231	0.25	1 × 200	0.8	1	226	304	446	1/4"	1/4"	16	13.8
OP-LCHC006	BG2	231	0.25	1 × 200	0.8	2	226	304	446	3/8"	1/4"	22	16.7
OP-LCHC008	BG3	518	0.31	1 × 230	1.1	2	256	321	458	3/8"	1/4"	23	17.9
OP-LCHC007	BG3	518	0.31	1 × 230	1.1	3	256	321	458	3/8"	1/4"	23	17.9
OP-LCHC008	BG3	518	0.31	1 × 230	1.1	3	256	321	458	3/8"	1/4"	23	17.9
OP-LCHC010	BG3	518	0.31	1 × 230	1.1	4	256	321	458	3/8"	1/4"	23	17.9
OP-LCHC012	BG4	631	0.40	1 × 254	1.1	4	296	331	465	3/8"	1/4"	25	22.0
OP-LCHC012	BG4	631	0.40	1 × 254	1.1	4	296	331	465	3/8"	1/4"	25	22.0
OP-LCHC015	BG5	583	0.53	1 × 254	1.1	4	296	331	465	3/8"	1/4"	26	23.4
OP-LCHC015	BG5	583	0.53	1 × 254	1.1	4	296	331	465	3/8"	1/4"	26	23.4
OP-LCHC018	BG5	583	0.53	1 × 254	1.1	4	296	331	465	1/2"	1/4"	26	23.4
OP-LCHC018	BG5	583	0.53	1 × 254	1.1	4	296	331	465	1/2"	1/4"	26	23.4
OP-LCHC021	BG5	583	0.53	1 × 254	1.1	4	296	331	465	1/2"	1/4"	26	23.4
OP-LCHC026	BG6	1150	0.63	1 × 300	2.4	7	340	430	480	1/2"	3/8"	45	39
OP-LCHC034	BG7	990	0.84	1 × 300	2.4	7	340	430	480	1/2"	3/8"	48	42
OP-LCHC048	A4	1200	1.2	1 × 300	3	5	402	500	600	5⁄8"	3⁄8"	54	45
OP-LCHC068	C4	2150	2.3	1 × 350	6	5	555	630	650	5⁄8"	1⁄2"	64	57
OP-LCHC096	D4	2000	3.1	1 × 350	6	5	555	630	650	7⁄8"	1⁄2"	78	71
OP-LCHC108	E4	3150	2.5	1 × 400	6	5	605	630	650	7⁄8"	1⁄2"	92	80
OP-LCHC136	G4	3150	4.1	1 × 400	8	5	656	755	700	7⁄8"	1⁄2"	95	83
OP-LCHC215	J4	6000	4.4	1 × 500	14	5	708	900	900	1 1⁄8"	5⁄8"	151	136
OP-LCHC271	L4	5850	6.3	1 × 500	14	5	759	900	900	1 1⁄8"	5⁄8"	166	151
OP-LGHC048	C3	1450	1.6	2 × 254	3	6	392	700	500	5⁄8"	3⁄8"	55	45
OP-LGHC068	D3	2800	1.5	2 × 300	6	6	442	800	600	5⁄8"	1⁄2"	62	55
OP-LGHC096	E3	2100	2.2	2 × 300	6	6	442	800	600	7⁄8"	1⁄2"	78	71
OP-LGHC108	G3	4600	2.3	2 × 355	8	6	555	1000	700	7⁄8"	1⁄2"	102	89
OP-LGHC136	H3	3600	4.7	2 × 355	8	6	555	1000	700	7⁄8"	1⁄2"	107	94
OP-LGHC215	L3	9000	5.1	2 × 450	14	6	671	1200	800	1 1⁄8"	5⁄8"	152	138
OP-LGHC271	L3	8600	5.1	2 × 450	14	6	671	1200	800	1 1⁄8"	5⁄8"	158	144

Optyma™ condensing units – R404A/R507 MBP Reciprocating

Nbr of fans	Test conditions	Unit	Version				Electrical code	Compressor	Amb. temp. °C	Capacity range in [W] at evaporating temperature [°C]					Power consumption (W)	Application range [°C]
			A00	A01	A04	A05				-15°C	-10°C	-5°C	0°C	+5°C		
	CECOMAF	OP-MCHC004	114X2208	114X2209	114X2211	114X2210	G	TL4DLX	32°C	265	314	377	450	528	284	38°C: -20°C till 0°C
		OP-MCHC006	114X2316	114X2317	114X2319	114X2318	G	FR6DLX	32°C	428	511	603	705	812	502	38°C: -20°C till 0°C
		OP-MCHC007	114X2424	114X2425	114X2427	114X2426	G	NF7MLX	32°C	577	688	810	941	1080	624	38°C: -23.3°C till -6.7°C
		OP-MCHC010	114X2532	114X2533	114X2535	114X2534	A	SC10MLX	32°C	736	884	1046	1220	1403	728	38°C: -23.3°C till -15°C
		OP-MCHC012	114X2540	114X2541	114X2543	114X2542	G	SC12MLX	32°C	863	1027	1205	1392	1586	890	38°C: -23.3°C till -20°C
		OP-MCHC015	114X2648	114X2649	114X2651	114X2650	G	SC15MLX	32°C	1081	1290	1519	1765	2026	1145	38°C: -23.3°C till -10°C
		OP-MCHC018	114X2756	114X2757	114X2759	114X2758	G	SC18MLX	32°C	1287	1538	1816	2116	2437	1235	38°C: -23.3°C till -6.70°C
		OP-MCHC021	114X2764	114X2765	114X2767	114X2766	G	GS21MLX	32°C	1410	1665	1925	2195	2460	1250	38°C: -20°C till -15°C
		OP-MCHC026	114X2772	114X2773	114X2775	114X2774	G	GS26MLX	32°C	1575	1870	2175	2470	2765	1500	38°C: -20°C till -10°C
		OP-MCHC034	114X2880	114X2881	114X2883	114X2882	G	GS34MLX	32°C	2350	2800	3250	3725	4200	2220	38°C: -20°C till-150°C

Test condition

EN13215	**CECOMAF**
Ambient temperature	32°C
Suction gas temperature	32°C

Electrical code

A - Compressor 230 V/1 phase/50 & 60 Hz, fan 230 V/1 phase/50 & 60 Hz
G - Compressor 230 V/1 phase/50 Hz, fan 230 V/1 phase/50 Hz

Version: A00: Without valves and receiver for capillary tubes
A01: With receiver, 2 stop valves, brackets and copper pipes for KP
A04: A01 + KP17WB + FSA-kit + power cord (except MCHC021, 26 and 034))
A05: A01 but solder valve for inch tubes

Optyma™ condensing units – R404A/R507 MBP Reciprocating

Unit	Condenser coil			Condenser fan	Receiver volume [L]	Dimensions [mm]						Weight [kg]
	Type	Air flow [m³/h]	Int. volume [dm³]	Fan blade Ø [mm]		Fig.	Height H [mm]	Width W [mm]	Length D [mm]	Suction line	Liquid line	
OP-MCHC004	BG2	231	0.25	1 × 200	0.8	1	226	304	446	3/8"	1/4"	13.8
OP-MCHC006	BG3	518	0.31	1 × 230	1.1	2	256	321	458	3/8"	1/4"	17.9
OP-MCHC007	BG4	631	0.40	1 × 254	1.1	3	296	331	478	3/8"	1/4"	18.3
OP-MCHC010	BG5	583	0.53	1 × 254	1.1	4	296	331	478	3/8"	1/4"	22.0
OP-MCHC012	BG5	583	0.53	1 × 254	1.1	4	296	331	478	3/8"	1/4"	22.0
OP-MCHC015	BG6	1132	1.1	1 × 300	1.1	4	350	442	610	1/2"	1/4"	40.6
OP-MCHC018	BG7	827	1.8	1 × 300	1.1	4	350	442	610	1/2"	1/4"	43.6
OP-MCHC021	BG7	990	0.84	1 × 300	1.6	7	340	430	480	5/8"	3/8"	36.0
OP-MCHC026	BG7	990	0.84	1 × 300	1.6	7	340	430	480	5/8"	3/8"	39.0
OP-MCHC034	BG8	2300	1.36	1 × 350	2.4	8	450	500	600	5/8"	3/8"	44.0

Optyma™ condensing units – R404A/R507 MBP Reciprocating

Nbr of fans	Test conditions	Unit	Version	Electrical code	Compressor	Amb. temp. °C	Capacity range in [W] at evaporating temperature [°C]					Power consumption (W)	Application range [°C]
			A02				-15°C	-10°C	-5°C	-0°C	+5°C		
	SH =10K	OP-MCZC030	114X5024	G	MTZ18	27°C	1576	2071	2624	3228	3877	1200	43°C: -30°C till 0°C 46°C: -25°C till -5°C
			114X5000	D		38°C	1217	1608	2049	2537	3070	1300	
			114X5012	E		43°C	1068	1411	1801	2237		1400	
		OP-MCZC038	114X5025	G	MTZ22	27°C	2426	3050	3741	4494	5294	1500	
			114X5001	D		38°C	1863	2369	2934	3550	4215	1600	
			114X5013	E		43°C	1615	2066	2572	3127		1700	
		OP-MCZC048	114X5026	G	MTZ28	27°C	3254	4063	4957	5924	6967	2000	
			114X5002	D		38°C	2514	3195	3944	4760	5641	2100	
			114X5014	E		43°C	2192	2813	3496	4246		2200	
		OP-MCZC054	114X5027	G	MTZ32	27°C	3687	4546	5481	6488	7549	2200	
			114X5003	D		38°C	2876	3582	4356	5187	6074	2400	
			114X5015	E		43°C	2513	3150	3849	4602		2400	
		OP-MCZC060	114X5028	G	MTZ36	27°C	4247	5201	6225	7318	8448	2600	
			114X5004	D		38°C	3356	4134	4968	5853	6786	2822	
			114X5016	E		43°C	2950	3649	4401	5197		2892	
		OP-MCZC068	114X5005	D	MTZ40	27°C	4918	5990	7148	8384	9676	3001	
			114X5017	E		38°C	3919	4792	5734	6729	7786	3254	
						43°C	3456	4238	5081	5974		3369	
		OP-MCZC086	114X5029	G	MTZ50	27°C	5701	7040	8499	10077	11735	3287	
			114X5006	D		38°C	4446	5540	6741	8044	9444	3494	
			114X5018	E		43°C	3901	4884	5971	7152		3580	
		OP-MCZC096	114X5007	D	MTZ56	27°C	6128	7629	9276	11074	12978	3562	
			114X5019	E		38°C	4811	6049	7418	8914	10534	3797	
						43°C	4240	5359	6605	7969		3897	
		OP-MCZC108	114X5008	D	MTZ64	27°C	7382	9145	11102	13247	15535	4770	
			114X5020	E		38°C	5787	7242	8866	10646	12589	5014	
						43°C	5074	6387	7860	9482		5104	
		OP-MCZC121	114X5009	D	MTZ72	27°C	8382	10353	12536	14916	17482	5227	
			114X5021	E		38°C	6591	8225	10052	12055	14224	5505	
						43°C	5816	7299	8956	10786		5627	
		OP-MCZC136	114X5010	D	MTZ80	27°C	9612	11730	14037	16540	19178	6152	
			114X5022	E		38°C	7652	9399	11312	13387	15621	6546	
						43°C	6779	8359	10098	11985		6711	
		OP-MCZC171	114X5011	D	MTZ100	27°C	11053	13656	16464	19472	22596	7281	
			114X5023	E		38°C	8726	10843	13129	15568	18151	7761	
						43°C	7654	9562	11617	13822		7915	
		OP-MGZC215	114X5058	D	MTZ125	27°C	14823	18259	22060	26206	30661	9497	
			114X5073	E		38°C	11644	14483	17638	21097	24845	10092	
						43°C	10273	12833	15689	18840		10343	
		OP-MGZC242	114X5059	D	MTZ144	27°C	16884	20555	24538	28839	33349	10936	
			114X5074	E		38°C	13357	16362	19639	23173	26956	11573	
						43°C	11776	14478	17440	20638		11826	
		OP- MGZC271	114X5060	D	MTZ160	27°C	18832	22958	27470	32351	37485	12137	
			114X5075	E		38°C	14977	18384	22124	26156	30475	12894	
						43°C	13249	16321	19705	23366		13215	
		OP-MGZD030	114X5076	G	MTZ18	27°C	1636	2168	2771	3438	4167	1306	46°C: -25°C till 0°C 48°C: -30°C till -5°C
			114X5046	D		38°C	1264	1683	2166	2707	3302	1392	
			114X5061	E		46°C	1021	1361	1757	2206		1457	
		OP-MGZD038	114X5077	G	MTZ22	27°C	2557	3241	4009	4856	5776	1541	
			114X5047	D		38°C	1972	2531	3162	3864	4631	1643	
			114X5062	E		46°C	1562	2027	2558	3152		1708	
		OP-MGZD048	114X5078	G	MTZ28	27°C	3327	4177	5119	6151	7267	2003	
			114X5048	D		38°C	2570	3283	4076	4949	5897	2129	
			114X5063	E		46°C	2047	2659	3344	4099		2212	
		OP-MGZD054	114X5079	G	MTZ32	27°C	3783	4687	5686	6765	7930	2217	
			114X5049	D		38°C	2951	3700	4525	5424	6392	2354	
			114X5064	E		46°C	2359	2991	3691	4460		2434	
		OP-MGZD060	114X5080	G	MTZ36	27°C	4512	5582	6757	8030	9392	2674	
			114X5050	D		38°C	3586	4469	5435	6486	7609	2883	
			114X5065	E		46°C	2911	3658	4477	5364		3006	
		OP-MGZD068	114X5051	D	MTZ40	27°C	5285	6511	7867	9345	10937	2991	
			114X5066	E		38°C	4261	5275	6396	7615	8936	3247	
						46°C	3494	4351	5299	6334		3441	
		OP-MGZD086	114X5081	G	MTZ50	27°C	6069	7564	9232	11053	13028	3308	
			114X5052	D		38°C	4739	5971	7346	8866	10516	3531	
			114X5067	E		46°C	3828	4865	6033	7330		3677	
		OP-MGZD096	114X5053	D	MTZ56	27°C	6348	7938	9713	11648	13750	3651	
			114X5068	E		38°C	4987	6308	7782	9405	11174	3894	
						46°C	4055	5177	6436	7840		4057	
		OP-MGZD108	114X5054	D	MTZ64	27°C	7724	9640	11791	14172	16777	4298	
			114X5069	E		38°C	6077	7667	9457	11456	13648	4565	
						46°C	4901	6251	7779	9501		4717	
		OP-MGZD121	114X5055	D	MTZ72	27°C	8491	10508	12757	15209	17875	4806	
			114X5070	E		38°C	6676	8356	10231	12299	14553	5088	
						46°C	5434	6859	8462	10256		5286	
		OP-MGZD136	114X5056	D	MTZ80	27°C	10146	12476	15057	17880	20948	6233	
			114X5071	E		38°C	8102	10042	12194	14566	17139	6650	
						46°C	6659	8312	10158	12194		6928	
		OP-MGZD171	114X5057	D	MTZ100	27°C	11709	14606	17800	21268	24996	7292	
			114X5072	E		38°C	9309	11688	14303	17153	20210	7846	
						46°C	7532	9550	11760	14178		8127	
		OP-MGZD215	114X5115	D	MTZ125	27°C	15416	19070	23137	27599	32426	9363	
			114X5118	E		38°C	12139	15166	18553	22308	26396	9987	
						46°C	9905	12465	15362	18587		10399	
		OP-MGZD242	114X5116	D	MTZ144	27°C	17606	21519	25832	30487	35497	10432	
			114X5119	E		38°C	13988	17228	20789	24659	28826	11110	
						46°C	11406	14140	17156	20470		11529	
		OP-MGZD271	114X5117	D	MTZ160	27°C	19694	24176	29133	34542	40372	11938	
			114X5120	E		38°C	15721	19448	23575	28112	33009	12744	
						46°C	12878	16041	19569	23450		13278	

Test condition
EN13215 — **SH10K**
Superheat — 10K

Electrical code
D - Compressor 400 V/3 phase/50 Hz, fan 400 V/3 phase/50 Hz
E - Compressor 400 V/3 phase/50 Hz, fan 230 V/1 phase/50 Hz
G - Compressor 230 V/1 phase/50 Hz, fan 230 V/1 phase/50 Hz

Version: **A02**: With receiver, stop valve, universal pressure switch, (KP17WB), flexible hoses and electrical box

Optyma™ condensing units – R404A/R507 MBP Reciprocating

Unit	Condenser coil			Condenser fan	Receiver volume	Dimensions						Weight [kg]	
	Type	Air flow [m³/h]	Int. volume [dm³]	Fan blade Ø [mm]	[L]	Fig.	Height H [mm]	Width W [mm]	Length D [mm]	Suction line	Liquid line	Gross	Net
OP-MCZC030	A4	1200	1.2	1 × 300	3	5	408	500	600	1/2″	3/8″	54	45
OP-MCZC038	B4	1750	1.3	1 × 350	3	5	451	500	620	1/2″	3/8″	56	47
OP-MCZC048	C4	2150	2.3	1 × 350	6	5	555	630	650	1/2″	1/2″	64	57
OP-MCZC054	C4	2150	2.3	1 × 350	6	5	555	630	650	5/8″	1/2″	65	58
OP-MCZC060	D4	2000	3.1	1 × 350	6	5	555	630	650	5/8″	1/2″	68	61
OP-MCZC068	E4	3150	2.5	1 × 400	6	5	605	630	650	5/8″	1/2″	72	65
OP-MCZC086	F4	3300	3.1	1 × 400	8	5	656	755	700	7/8″	1/2″	95	83
OP-MCZC096	G4	3150	4.1	1 × 400	8	5	656	755	700	7/8″	1/2″	100	88
OP-MCZC108	H4	4300	4.1	1 × 500	8	5	656	755	700	7/8″	1/2″	113	101
OP-MCZC121	J4	6000	4.4	1 × 500	10	5	708	900	900	1 1/8″	1/2″	127	113
OP-MCZC136	K4	6200	4.7	1 × 500	10	5	759	900	900	1 1/8″	1/2″	140	126
OP-MCZC171	L4	5850	6.3	1 × 500	14	5	759	900	900	1 1/8″	5/8″	162	147
OP-MGZC215	M4	11000	7.4	2 × 500	14	6	759	1350	820	1 1/8″	5/8″	191	176
OP-MGZC242	M4	11000	7.4	2 × 500	14	6	759	1350	820	1 1/8″	5/8″	194	179
OP- MGZC271	N4	9200	12.3	2 × 500	14	6	759	1350	820	1 1/8″	5/8″	199	184
OP-MGZD030	C3	1300	1.7	2 × 254	3	6	392	700	500	1/2″	3/8″	56	46
OP-MGZD038	D3	2800	1.5	2 × 300	6	6	442	800	600	1/2″	1/2″	60	53
OP-MGZD048	E3	2600	2.2	2 × 300	6	6	442	800	600	1/2″	1/2″	64	57
OP-MGZD054	E3	2600	2.2	2 × 300	6	6	442	800	600	5/8″	1/2″	65	58
OP-MGZD060	G3	4600	2.3	2 × 355	8	6	555	1000	700	5/8″	1/2″	88	75
OP-MGZD068	H3	3600	4.7	2 × 355	8	6	555	1000	700	5/8″	1/2″	96	82
OP-MGZD086	H3	3600	4.7	2 × 355	8	6	555	1000	700	7/8″	1/2″	107	93
OP-MGZD096	H3	3600	4.7	2 × 355	8	6	555	1000	700	7/8″	1/2″	109	95
OP-MGZD108	J3	5400	4.7	2 × 400	10	6	555	1000	700	7/8″	1/2″	113	99
OP-MGZD121	J3	5400	4.7	2 × 400	10	6	555	1000	700	7/8″	1/2″	115	101
OP-MGZD136	L3	8600	5.1	2 × 450	10	6	671	1200	800	1 1/8″	1/2″	133	118
OP-MGZD171	M3	8200	6.8	2 × 450	14	6	671	1200	800	1 1/8″	5/8″	158	144
OP-MGZD215	N4	9200	12.25	2 × 500	14	6	759	1350	820	1 1/8″	5/8″	196	180
OP-MGZD242	N4	9200	12.25	2 × 500	14	6	759	1350	820	1 1/8″	5/8″	199	183
OP-MGZD271	U	14000	14.2	2 × 600	14	6	975	1500	870	1 1/8″	5/8″	230	212

Optyma™ condensing units – R404A/R507 MBP Scroll

Nbr of fans	Test conditions	Unit	Version	Electrical code	Compressor	Amb. temp. °C	Capacity range in [W] at evaporating temperature [°C]					Power consumption (W)	Application range [°C]
			A02				-15°C	-10°C	-5°C	-0°C	+5°C		
	SH =10K	OP-MCUC034	114X5564	G	MLZ015	27°C	2635	3087	3549	4020	4491	1911	38°C: -25°C till 10°C 43°C: -20°C till 5°C
			114X5576	D		38°C	1911	2281	2654	3027	3402	2506	
			114X5568	E		43°C	1538	1876	2213	2547	2884	2851	
		OP-MCUC043	114X5565	G	MLZ019	27°C	3258	3716	4179	4653	5133	2624	
			114X5577	D		38°C	2472	2815	3162	3524	3891	3186	
			114X5569	E		43°C	2090	2384	2679	2972	3274	3463	
		OP-MCUC057	114X5566	G	MLZ026	27°C	5305	6226	7222	8286	9408	2667	
			114X5578	D		38°C	4332	5082	5890	6753	7666	3382	
			114X5570	E		43°C	3845	4520	5243	6017	6838	3787	
		OP-MCUC068	114X5567	G	MLZ030	27°C	6278	7357	8517	9748	11044	3224	
			114X5579	D		38°C	5108	5974	6907	7903	8958	4043	
			114X5571	E		43°C	4533	5300	6131	7021	7970	4483	
		OP-MCUC080	114X5580	D	MLZ038	27°C	7744	9116	10604	12202	13901	3652	
			114X5572	E		38°C	6371	7491	8703	10005	11400	4584	
						43°C	5698	6703	7791	8961	10219	5096	
		OP-MCUC107	114X5581	D	MLZ048	27°C	10047	11785	13663	15685	17857	4844	
			114X5573	E		32°C	8232	9647	11170	12811	14579	6122	
						43°C	7345	8612	9973	11445	13036	6836	
		OP-MGUC148	114X5582	D	MLZ066	27°C	13608	15956	18471	21138	23944	6586	
			114X5574	E		38°C	11188	13126	15175	17335	19609	8233	
						43°C	9988	11746	13591	15529	17571	9155	
		OP-MGUC162	114X5583	D	MLZ076	27°C	16241	18945	21853	24995	28365	7297	
			114X5575	E		38°C	13236	15217	17383	19748	22344	8967	
						43°C	11809	13422	15219	17218	19454	9852	
		OP-MGUD034	114X5507	G	MLZ015	27°C	3097	3681	4309	4979	5689	1545	38°C: -25°C till 10°C 46°C: -25°C till 10°C
			114X5512	D		38°C	2437	2926	3442	3986	4560	2020	
			114X5523	E		46°C	1888	2314	2755	3214	3697	2479	
		OP-MGUD043	114X5508	G	MLZ019	27°C	4115	4844	5637	6496	7420	1952	
			114X5513	D		38°C	3398	3994	4639	5338	6095	2454	
			114X5524	E		46°C	2816	3317	3856	4442	5084	2871	
		OP-MGUD057	114X5510	G	MLZ026	27°C	5433	6398	7449	8582	9788	2571	
			114X5515	D		38°C	4472	5264	6124	7050	8038	3258	
			114X5526	E		46°C	3693	4360	5082	5861	6695	3909	
		OP-MGUD068	114X5511	G	MLZ030	27°C	6637	7844	9164	10591	12113	2961	
			114X5516	D		38°C	5495	6483	7566	8740	9999	3728	
			114X5527	E		46°C	4582	5406	6314	7305	8379	4412	
		OP-MGUD080	114X5517	D	MLZ038	27°C	8038	9516	11141	12907	14811	3446	
			114X5528	E		38°C	6685	7906	9244	10700	12273	4330	
						46°C	5610	6641	7771	9003	10340	5139	
		OP-MGUD107	114X5519	D	MLZ048	27°C	10534	12444	14542	16837	19333	4497	
			114X5530	E		38°C	8754	10331	12057	13948	16012	5686	
						46°C	7341	8674	10128	11726	13482	6791	
		OP-MGUD148	114X5521	D	MLZ066	27°C	14006	16492	19185	22072	25144	6310	
			114X5532	E		38°C	11617	13683	15893	18249	20756	7883	
						46°C	9694	11466	13338	15322	17425	9352	
		OP-MGUD162	114X5522	D	MLZ076	27°C	16760	19669	22835	26293	30042	6995	
			114X5533	E		38°C	13765	15950	18362	21018	23954	8622	
						46°C	11465	13043	14840	16877	19196	10046	

Test condition
EN13215 **SH10K**
Superheat 10K

Electrical code
D - Compressor 400 V/3 phase/50 Hz, fan 400 V/3 phase/50 Hz
E - Compressor 400 V/3 phase/50 Hz, fan 230 V/1 phase/50 Hz
G - Compressor 230 V/1 phase/50 Hz, fan 230 V/1 phase/50 Hz

Version: A02: With receiver, stop valve, universal pressure switch, (KP17WB), flexible hoses and electrical box

Optyma™ condensing units – R404A/R507 MBP Scroll

Unit	Condenser coil			Condenser fan	Receiver volume [L]	Dimensions						Weight [kg]	
	Type	Air flow [m³/h]	Int. volume [dm³]	Fan blade Ø [mm]		Fig.	Height H [mm]	Width W [mm]	Length D [mm]	Suction line	Liquid line	Gross	Net
OP-MCUC034	C4	2150	2.3	1 x 350	6	9	555	630	650	3/4"	1/2"	72	65
OP-MCUC043	C4	2150	2.3	1 x 350	6	9	555	630	650	3/4"	1/2"	72	65
OP-MCUC057	E4	3150	2.5	1 x 400	6	9	605	630	650	3/4"	1/2"	77	70
OP-MCUC068	F4	3300	3.1	1 x 400	8	9	656	755	700	7/8"	1/2"	95	83
OP-MCUC080	H4	4300	4.1	1 x 500	8	9	656	755	700	7/8"	1/2"	111	99
OP-MCUC107	K4	6200	4.7	1 x 500	10	9	759	900	900	7/8"	1/2"	136	122
OP-MGUC148	L3	8600	5.1	2 X 450	10	9	671	1200	800	1 1/8"	1/2"	139	125
OP-MGUC162	M4	11000	7.4	2 x 500	14	9	759	1350	820	1 1/8"	5/8"	172	157
OP-MGUD034	D3	2800	1.5	2 x 300	6	9	442	800	600	3/4"	1/2"	70	63
OP-MGUD043	E3	2600	2.2	2 x 300	6	9	442	800	600	3/4"	1/2"	72	65
OP-MGUD057	G3	4600	2.3	2 x 355	8	9	555	1000	700	3/4"	1/2"	72	63
OP-MGUD068	H3	3600	4.7	2 x 355	8	9	555	1000	700	7/8"	1/2"	107	93
OP-MGUD080	J3	5400	4.7	2 x 400	8	9	555	1000	700	7/8"	1/2"	108	95
OP-MGUD107	L3	8600	5.1	2 x 450	10	9	671	1200	800	7/8"	1/2"	129	114
OP-MGUD148	M3	8200	6.8	2 x 450	10	9	671	1200	800	1 1/8"	1/2"	141	126
OP-MGUD162	N4	9200	12.3	2 x 500	14	9	750	1350	870	1 1/8"	5/8"	177	161

Optyma™ condensing units – R134a LBP/MBP/HBP Reciprocating

Nbr of fans	Test conditions	Unit	Version				Electrical code	Compressor	Amb. temp. °C	Capacity range in [W] at evaporating temperature [°C]						Power consumption (W)	Application range [°C]
			A00	A01	A04	A05				-30°C	-20°C	-10°C	0°C	+5°C	+10°C		
	CECOMAF	OP-UCGC003	114X0104	114X0105	114X0107	114X0106	G	TL3GX	32°C	52	91	147	220	263	309	93	-30°C till +15°C
		OP-UCGC004	114X0108	114X0109	114X0111	114X0110	G	TL4GX	32°C	67	115	182	269	320	377	110	-30°C till +7.2°C
		OP-UCGC005	114X0112	114X0113	114X0115	114X0114	G	TL5GX	32°C	83	139	217	317	374	436	123	-30°C till +0°C
		OP-UCGC006	114X0200	114X0201	114X0203	114X0202	G	FR6GX	32°C	106	185	294	437	522	617	145	-30°C till +10°C
		OP-MCGC006	114X0228	114X0229	114X0231	114X0230	A	NL6.1MF	32°C		192	30 6	453	537	628	142	-20°C till +10°C
		OP-MCGC007	114X0244	114X0245	114X0247	114X0246	A	NL7.3MF	32°C		237	372	541	638	742	173	-20°C till +5°C
		OP-UCGC007	114X0216	114X0217	114X0219	114X0218	G	FR7.5GX	32°C	114	201	321	478	571	674	159	-30°C till +10°C
		OP-UCGC008	114X0224	114X0225	114X0227	114X0226	G	FR8.5GX	32°C	141	24 0	376	550	652	762	181	-30°C till +5°C
		OP-MCGC008	114X0352	114X0353	114X0355	114X0354	A	NL8.4MF	32°C		283	4 46	657	780	915	198	-20°C till +15°C
		OP-MCGC010	114X0360	114X0361	114X0363	114X0362	A	NL10MF	32°C		3 47	536	780	922	1076	243	-20°C till +7.25°C
		OP-UCGC010	114X0232	114X0233	114X0235	114X0234	G	FR10GX	32°C	149	254	396	580	688	805	207	-30°C till +5°C
●		OP-UCGC011	114X0336	114X0337	114X0339	114X0338	G	FR11GX	32°C	16 8	327	510	737	875		236	-30°C till +5°C
		OP-MCGC011	114X0376	114X0377	114X0379	114X0378	G	NL11MF	32°C		378	582	842	992	1154	265	-20°C till +5°C
		OP-UCGC012	114X0340	114X0341	114X0343	114X0342	G	SC12GX	32°C	202	381	610	880	1029	1185	261	-35°C till +0°C
		OP-UCGC015	114X0448	114X04 49	114X0451	114X0450	G	SC15GX	32°C		4 63	731	1045	1220	1405	323	-25°C till +0°C
		OP-UCGC018	114X0556	114X0557	114X0559	114X0558	G	SC18GX	32°C		531	833	1210	1432	1682	367	-25°C till +05°C
		OP-MCGC021	114X0568	114X0569	114X0571	114X0570	G	SC21MF	32°C		628	947	1344	1568	1808	463	-23.5°C till -5°C
		OP-UCGC021	114X0564	114X0565	114X0567	114X0566	G	SC21GX	32°C		622	981	1414	1652	1902	437	-25°C till -5°C
	RGT20	OP-UCGC026	114X0772	114X0773	114X0775	114X0774	G	GS26MFX	32°C		820	1290	1890	2230		(-20°C) 660	-20°C till +7.2°C
		OP-UCGC034	114X0780	114X0781	114X0783	114X0782	G	GS34MFX	32°C		990	150 0	2100	2450		(-20°C) 700	-20°C till +0°C

Test condition

EN13215	**RGT20**	**CECOMAF**
Ambient temperature	32°C	32°C
Suction gas temperature	20°C	32°C

Electrical code
A: Compressor 230 V/1 phase/50+60 Hz, fan 230 V/1 phase/50+60 Hz
G: Compressor 230 V/1 phase/50 Hz, fan 230 V/1 phase/50 Hz

Version: **A00**: Without valves and receiver for capillary tubes
A01: With receiver, 2 stop valves, brackets and copper pipes for KP
A04: A01 + KP17WB + FSA-kit + power cord (except LCH034)
A05: A01 but solder valve for inch tubes

Optyma™ condensing units – R134a LBP/MBP/HBP Reciprocating

Unit	Condenser coil			Condenser fan	Receiver volume [L]	Dimensions						Weight
	Type	Air flow [m³/h]	Int. volume [dm³]	Fan blade Ø [mm]		Fig.	Height H [mm]	Width W [mm]	Length D [mm]	Suction line	Liquid line	
OP-UCGC003	BG1	243	0.13	1x172	0.8	1	197	289	410	1/4"	1/4"	13.2
OP-UCGC004	BG1	243	0.13	1x172	0.8	1	197	289	410	1/4"	1/4"	13.2
OP-UCGC005	BG1	243	0.13	1x172	0.8	1	197	289	410	1/4"	1/4"	13.2
OP-UCGC006	BG2	231	0.25	1x200	0.8	2	226	304	432	3/8"	1/4"	16.7
OP-UCGC007	BG2	231	0.25	1x200	0.8	2	226	304	432	3/8"	1/4"	16.7
OP-UCGC008	BG2	231	0.25	1x200	0.8	2	226	304	432	3/8"	1/4"	16.7
OP-UCGC010	BG2	231	0.25	1x200	0.8	4	226	304	432	3/8"	1/4"	16.7
OP-UCGC011	BG3	518	0.31	1x230	1.1	4	256	321	444	3/8"	1/4"	17.9
OP-UCGC012	BG3	518	0.31	1x230	1.1	4	256	321	444	3/8"	1/4"	17.9
OP-UCGC015	BG4	631	0.40	1x254	1.1	4	296	331	451	3/8"	1/4"	22
OP-UCGC018	BG5	583	0.53	1x254	1.1	4	296	331	473	3/8"	1/4"	23.4
O P-UCGC021	BG5	583	0.53	1x254	1.1	4	296	331	513	3/8"	1/4"	23.4
OP-UCGC026	BG7	990	0.84	1x300	2.4	7	340	430	480	3/8"	1/4"	34.5
OP-UCGC034	BG7	990	0.84	1x300	2.4	7	340	430	480	1/2"	3/8"	36

Optyma™ condensing units – R134a MBP Reciprocating

Nbr of fans	Test conditions	Unit	Version	Electrical code	Compressor	Amb. temp. °C	Capacity range in [W] at evaporating temperature [°C]					Power consumption (W)	Application range [°C]
			A02				-15°C	-10°C	-5°C	-0°C	+5°C		
1	SH=10K	OP-MCZC030	114X5024	G	MTZ18	27°C	991	1350	1768	2238	2757	714	46°C: -15°C till +10°C 43°C: -15°C till +15°C
			114X5000	D		38°C	736	1054	1417	1820	2259	756	
			114X5012	E		43°C	643	938	1270	1638	2038	767	
		OP-MCZC038	114X5025	G	MTZ22	27°C	1293	1745	2280	2895	3589	883	
			114X5001	D		38°C	994	1394	1858	2388	2981	933	
			114X5013	E		43°C	879	1249	1676	2164	2708	947	
		OP-MCZC048	114X5026	G	MTZ28	27°C	1631	2167	2824	3609	4517	1054	
			114X5002	D		38°C	1314	1783	2355	3031	3814	1135	
			114X5014	E		43°C	1197	1628	2153	2774	3494	1166	
		OP-MCZC054	114X5027	G	MTZ32	27°C	1882	2502	3250	4124	5123	1296	
			114X5003	D		38°C	1497	2044	2695	3452	4313	1369	
			114X5015	E		43°C	1344	1850	2450	3149	3942	1392	
		OP-MCZC060	114X5028	G	MTZ36	27°C	2513	3217	4040	4978	6029	1471	
			114X5004	D		38°C	2099	2725	3448	4265	5176	1588	
			114X5016	E		43°C	1917	2502	3174	3932	4771	1630	
		OP-MCZC068	114X5005	D	MTZ40	27°C	2918	3654	4496	5446	6499	1606	
			114X5017	E		38°C	2509	3174	3926	4766	5691	1774	
						43°C	2313	2940	3645	4430	5293	1838	
		OP-MCZC086	114X5029	G	MTZ50	27°C	3168	4150	5319	6672	8201	2058	
			114X5006	D		38°C	2472	3348	4378	5558	6884	2158	
			114X5018	E		43°C	2210	3025	3979	5069	6294	2187	
		OP-MCZC096	114X5007	D	MTZ56	27°C	3534	4644	5958	7473	9181	2243	
			114X5019	E		38°C	2770	3761	4922	6251	7743	2349	
						43°C	2465	3393	4476	5712	7100	2380	
		OP-MCZC108	114X5008	D	MTZ64	27°C	4049	5329	6847	8601	10589	2996	
			114X5020	E		38°C	3173	4327	5680	7234	8982	3114	
						43°C	2818	3905	5171	6623	8254	3148	
		OP-MCZC121	114X5009	D	MTZ72	27°C	4846	6306	8020	9985	12197	3227	
			114X5021	E		38°C	3825	5141	6671	8410	10363	3341	
						43°C	3375	4617	6054	7689	9514	3323	
		OP-MCZC136	114X5010	D	MTZ80	27°C	5635	7264	9168	11341	13778	3647	
			114X5022	E		38°C	4561	6027	7719	9634	11772	3808	
						43°C	4092	5468	7052	8841	10827	3858	
		OP-MCZC171	114X5011	D	MTZ100	27°C	6081	7995	10264	12879	15833	4100	
			114X5023	E		38°C	4826	6539	8543	10836	13404	4351	
						43°C	4347	5950	7810	9936	12313	4435	
		OP-MGZC215	114X5058	D	MTZ125	27°C	7985	10401	13258	16562	20303	5303	
			114X5073	E		38°C	6248	8434	10980	13904	17196	5519	
						43°C	5533	7588	9972	12704	15774	5566	
2		OP-MGZC242	114X5059	D	MTZ144	27°C	9716	12466	15663	19289	23328	6441	
			114X5074	E		38°C	7842	10281	13079	16218	19688	6822	
						43°C	7038	9307	11897	14787	17968	6967	
		OP- MGZC271	114X5060	D	MTZ160	27°C	11030	14146	17804	21989	26687	6839	
			114X5075	E		38°C	9080	11859	15067	18716	22776	7231	
						43°C	8271	10856	13827	17197	20940	7389	
		OP-MGZD030	114X5076	G	MTZ18	27°C	1020	1395	1832	2333	2892	769	46°C: -15°C till +15°C 48°C: -15°C till +10°C
			114X5046	D		38°C	755	1087	1468	1898	2376	815	
			114X5061	E		46°C	607	897	1228	1599	2009	832	
		OP-MGZD038	114X5077	G	MTZ22	27°C	1334	1806	2369	3024	3772	887	
			114X5047	D		38°C	1025	1442	1933	2500	3145	942	
			114X5062	E		46°C	840	1206	1635	2130	2692	965	
		OP-MGZD048	114X5078	G	MTZ28	27°C	1650	2197	2872	3680	4626	1062	
			114X5048	D		38°C	1327	1806	2393	3093	3911	1145	
			114X5063	E		46°C	1145	1560	2069	2678	3391	1195	
		OP-MGZD054	114X5079	G	MTZ32	27°C	1910	2546	3316	4225	5271	1303	
			114X5049	D		38°C	1518	2079	2751	3541	4447	1379	
			114X5064	E		46°C	1275	1767	2356	3047	3843	1415	
		OP-MGZD060	114X5080	G	MTZ36	27°C	2585	3321	4188	5193	6335	1558	
			114X5050	D		38°C	2161	2821	3591	4474	5475	1683	
			114X5065	E		46°C	1866	2457	3143	3927	4814	1752	
		OP-MGZD068	114X5051	D	MTZ40	27°C	3009	3778	4669	5684	6828	1650	
			114X5066	E		38°C	2600	3303	4108	5021	6042	1829	
						46°C	2283	2926	3658	4484	5406	1936	
2		OP-MGZD086	114X5081	G	MTZ50	27°C	3313	4347	5589	7050	8725	2126	
			114X5052	D		38°C	2572	3498	4598	5883	7352	2236	
			114X5067	E		46°C	2142	2964	3939	5071	6366	2287	
		OP-MGZD096	114X5053	D	MTZ56	27°C	3929	5168	6649	8374	10339	2321	
			114X5068	E		38°C	3093	4212	5531	7060	8794	2434	
						46°C	2577	3585	4768	6136	7687	2483	
		OP-MGZD108	114X5054	D	MTZ64	27°C	4172	5505	7094	8954	11082	2571	
			114X5069	E		38°C	3266	4471	5892	7545	9432	2700	
						46°C	2692	3779	5059	6540	8231	2756	
		OP-MGZD121	114X5055	D	MTZ72	27°C	4895	6378	8125	10139	12414	2814	
			114X5070	E		38°C	3865	5203	6765	8552	10562	2940	
						46°C	3144	4359	5769	7379	9184	2896	
		OP-MGZD136	114X5056	D	MTZ80	27°C	5809	7509	9508	11821	14443	3818	
			114X5071	E		38°C	4708	6245	8033	10089	12412	3994	
						46°C	3944	5333	6941	8784	10864	4078	
		OP-MGZD171	114X5057	D	MTZ100	27°C	6301	8310	10707	13516	16727	4251	
			114X5072	E		38°C	4984	6786	8917	11387	14209	4522	
						46°C	4207	5815	7708	9897	12397	4662	
		OP-MGZD215	114X5115	D	MTZ125	27°C	8171	10657	13602	17035	20957	5266	
			114X5118	E		38°C	6393	8644	11285	14331	17801	5502	
						46°C	5246	7277	9650	12378	15482	5576	
		OP-MGZD242	114X5116	D	MTZ144	27°C	9956	12800	16121	19933	24213	6377	
			114X5119	E		38°C	8046	10581	13505	16832	20538	6774	
						46°C	6749	9003	11583	14504	17737	7008	
		OP-MGZD271	114X5117	D	MTZ160	27°C	11302	14534	18348	22770	27784	6789	
			114X5120	E		38°C	9293	12184	15561	19433	23814	7197	
						46°C	7987	10554	13539	16951	20810	7454	

Test condition
EN13215 **SH10K**
Superheat 10K

Electrical code
D: Compressor 400 V/3 phase/50 Hz, fan 400 V/3 phase/50 Hz
E: Compressor 400 V/3 phase/50 Hz, fan 230 V/1 phase/50 Hz
G: Compressor 230 V/1 phase/50 Hz, fan 230 V/1 phase/50 Hz

Version: **A02**: With receiver, stop valve, universal pressure switch, (KP17WB), flexible hoses and electrical box

Optyma™ condensing units – R134a MBP Reciprocating

Unit	Condenser coil			Condenser fan	Receiver volume [L]	Dimensions						Weight [kg]	
	Type	Air flow [m3/h]	Int. volume [dm3]	Fan blade Ø [mm]		Fig.	Height H [mm]	Width W [mm]	Length D [mm]	Suction line	Liquid line	Gross	Net
OP-MCZC030	A4	1200	1.2	1 × 300	3	5	408	500	600	1/2″	3/8″	54	45
OP-MCZC038	B4	1750	1.3	1 × 350	3	5	451	500	620	1/2″	3/8″	56	47
OP-MCZC048	C4	2150	2.3	1 × 350	6	5	555	630	650	1/2″	1/2″	64	57
OP-MCZC054	C4	2150	2.3	1 × 350	6	5	555	630	650	5/8″	1/2″	65	58
OP-MCZC060	D4	2000	3.1	1 × 350	6	5	555	630	650	5/8″	1/2″	68	61
OP-MCZC068	E4	3150	2.5	1 × 400	6	5	605	630	650	5/8″	1/2″	72	65
OP-MCZC086	F4	3300	3.1	1 × 400	8	5	656	755	700	7/8″	1/2″	95	83
OP-MCZC096	G4	3150	4.1	1 × 400	8	5	656	755	700	7/8″	1/2″	100	88
OP-MCZC108	H4	4300	4.1	1 × 500	8	5	656	755	700	7/8″	1/2″	113	101
OP-MCZC121	J4	6000	4.4	1 × 500	10	5	708	900	900	1″1/8	1/2″	127	113
OP-MCZC136	K4	6200	4.7	1 × 500	10	5	759	900	900	1″1/8	1/2″	140	126
OP-MCZC171	L4	5850	6.3	1 × 500	14	5	759	900	900	1″1/8	5/8″	162	147
OP-MGZC215	M4	11000	7.4	2 × 500	14	6	759	1350	820	1″1/8	5/8″	191	176
OP-MGZC242	M4	11000	7.4	2 × 500	14	6	759	1350	820	1″1/8	5/8″	194	179
OP- MGZC271	N4	9200	12.3	2 × 500	14	6	759	1350	820	1″1/8	5/8″	199	184
OP-MGZD030	C3	1300	1.7	2 × 254	3	6	392	700	500	1/2″	3/8″	56	46
OP-MGZD038	D3	2800	1.5	2 × 300	6	6	442	800	600	1/2″	1/2″	60	53
OP-MGZD048	E3	2600	2.2	2 × 300	6	6	442	800	600	1/2″	1/2″	64	57
OP-MGZD054	E3	2600	2.2	2 × 300	6	6	442	800	600	5/8″	1/2″	65	58
OP-MGZD060	G3	4600	2.3	2 × 355	8	6	555	1000	700	5/8″	1/2″	88	75
OP-MGZD068	H3	3600	4.7	2 × 355	8	6	555	1000	700	5/8″	1/2″	96	82
OP-MGZD086	H3	3600	4.7	2 × 355	8	6	555	1000	700	7/8″	1/2″	107	93
OP-MGZD096	H3	3600	4.7	2 × 355	8	6	555	1000	700	7/8″	1/2″	109	95
OP-MGZD108	J3	5400	4.7	2 × 400	10	6	555	1000	700	7/8″	1/2″	113	99
OP-MGZD121	J3	5400	4.7	2 × 400	10	6	555	1000	700	7/8″	1/2″	115	101
OP-MGZD136	L3	8600	5.1	2 × 450	10	6	671	1200	800	1″1/8	1/2″	133	118
OP-MGZD171	M3	8200	6.8	2 × 450	14	6	671	1200	800	1″1/8	5/8″	158	144
OP-MGZD215	N4	9200	12.25	2 × 500	14	6	759	1350	820	1″1/8	5/8″	196	180
OP-MGZD242	N4	9200	12.25	2 × 500	14	6	759	1350	820	1″1/8	5/8″	199	183
OP-MGZD271	U	14000	14.2	2 × 600	14	6	975	1500	870	1″1/8	5/8″	230	212

Optyma™ condensing units – R134a MBP scroll

Nbr of fans	Test conditions	Unit	Version	Electrical code	Compressor	Amb. temp. °C	Capacity range in [W] at evaporating temperature [°C]					Power consumption (W)	Application range [°C]
			A02				-15°C	-10°C	-5°C	-0°C	+5°C		
	SH =10K	OP-MCUC034	114X5564	G	MLZ015	27°C	1843	2313	2860	3488	4201	809	38°C: -15°C till 15°C 48°C: -10°C till 15°C
			114X5576	D		38°C	1625	2040	2528	3093	3737	1015	
			114X5568	E		43°C	1528	1914	2373	2905	3515	1123	
		OP-MCUC043	114X5565	G	MLZ019	27°C	2349	2920	3594	4368	5241	1075	
			114X5577	D		38°C	2058	2565	3164	3856	4637	1330	
			114X5569	E		43°C	1921	2397	2960	3612	4351	1459	
		OP-MCUC057	114X5566	G	MLZ026	27°C	3058	3832	4725	5742	6885	1349	
			114X5578	D		38°C	2666	3360	4160	5071	6097	1679	
			114X5570	E		43°C	2486	3140	3893	4753	5722	1851	
		OP-MCUC068	114X5567	G	MLZ030	27°C	3667	4580	5639	6846	8201	1626	
			114X5579	D		38°C	3224	4028	4965	6040	7252	2023	
			114X5571	E		43°C	3022	3770	4647	5656	6799	2232	
		OP-MCUC080	114X5580	D	MLZ038	27°C	4361	5478	6766	8232	9883	1923	
			114X5572	E		38°C	3796	4803	5962	7280	8765	2385	
						43°C	3533	4486	5581	6828	8235	2625	
		OP-MCUC107	114X5581	D	MLZ048	27°C	5754	7187	8863	10774	12907	2394	
			114X5573	E		32°C	5008	6277	7776	9494	11421	2990	
						43°C	4668	5851	7259	8881	10705	3299	
		OP-MGUC148	114X5582	D	MLZ066	27°C	7978	9914	12153	14692	17525	3439	
			114X5574	E		38°C	6900	8645	10661	12946	15496	4261	
						43°C	6396	8049	9957	12121	14538	4664	
		OP-MGUC162	114X5583	D	MLZ076	27°C	8960	11210	13793	16719	19997	3803	
			114X5575	E		38°C	7807	9804	12117	14754	17725	4744	
						43°C	7299	9163	11336	13827	16643	5214	
		OP-MGUD034	114X5507	G	MLZ015	27°C	1830	2294	2834	3452	4151	822	43°C: -15°C till 15°C 48°C: -10°C till 15°C
			114X5512	D		38°C	1613	2022	2502	3055	3686	1030	
			114X5523	E		46°C	1457	1820	2251	2753	3328	1212	
		OP-MGUD043	114X5508	G	MLZ019	27°C	2372	2954	3642	4436	5335	1052	
			114X5513	D		38°C	2082	2600	3214	3925	4732	1304	
			114X5524	E		46°C	1862	2330	2886	3533	4270	1513	
		OP-MGUD057	114X5510	G	MLZ026	27°C	3088	3875	4785	5826	7001	1321	
			114X5515	D		38°C	2696	3403	4221	5157	6214	1647	
			114X5526	E		46°C	2409	3050	3793	4645	5610	1925	
		OP-MGUD068	114X5511	G	MLZ030	27°C	3749	4698	5807	7083	8527	1550	
			114X5516	D		38°C	3305	4146	5137	6281	7583	1932	
			114X5527	E		46°C	2981	3733	4626	5665	6855	2263	
		OP-MGUD080	114X5517	D	MLZ038	27°C	4431	5577	6903	8425	10148	1861	
			114X5528	E		38°C	3867	4905	6103	7477	9034	2312	
						46°C	3445	4395	5492	6750	8180	2697	
		OP-MGUD107	114X5519	D	MLZ048	27°C	5871	7353	9094	11093	13341	2293	
			114X5530	E		38°C	5123	6445	8013	9824	11869	2873	
						46°C	4578	5762	7183	8839	10719	3367	
		OP-MGUD148	114X5521	D	MLZ066	27°C	8082	10058	12353	14967	17899	3349	
			114X5532	E		38°C	7007	8793	10865	13226	15873	4163	
						46°C	6199	7834	9733	11897	14328	4811	
		OP-MGUD162	114X5521	D	MLZ076	27°C	9076	11374	14018	17028	20412	3701	
			114X5533	E		38°C	7917	9965	12343	15067	18147	4630	
						46°C	7105	8937	11087	13573	16404	5385	

Test condition
EN13215
Superheat

SH10K
10K

Electrical code
D: Compressor 400 V/3 phase/50 Hz, fan 400 V/3 phase/50 Hz
E: Compressor 400 V/3 phase/50 Hz, fan 230 V/1 phase/50 Hz
G: Compressor 230 V/1 phase/50 Hz, fan 230 V/1 phase/50 Hz

Version: **A02**: With receiver, stop valve, universal pressure switch, (KP17WB), flexible hoses and electrical box

Optyma™ condensing units – R134a MBP scroll

Unit	Condenser coil			Condenser fan	Receiver volume [L]	Dimensions						Weight [kg]	
	Type	Air flow [m³/h]	Int. volume [dm³]	Fan blade Ø [mm]		Fig.	Height H [mm]	Width W [mm]	Length D [mm]	Suction line	Liquid line	Gross	Net
OP-MCUC034	C4	2150	2.3	1 x 350	6	9	555	630	650	3/4"	1/2"	72	65
OP-MCUC043	C4	2150	2.3	1 x 350	6	9	555	630	650	3/4"	1/2"	72	65
OP-MCUC057	E4	3150	2.5	1 x 400	6	9	605	630	650	3/4"	1/2"	77	70
OP-MCUC068	F4	3300	3.1	1 x 400	8	9	656	755	700	7/8"	1/2"	95	83
OP-MCUC080	H4	4300	4.1	1 x 500	8	9	656	755	700	7/8"	1/2"	111	99
OP-MCUC107	K4	6200	4.7	1 x 500	10	9	759	900	900	7/8"	1/2"	136	122
OP-MGUC148	L3	8600	5.1	2 X 450	10	9	671	1200	800	1"1/8	1/2"	139	125
OP-MGUC162	M4	11000	7.4	2 x 500	14	9	759	1350	820	1"1/8	5/8"	172	157
OP-MGUD034	D3	2800	1.5	2 x 300	6	9	442	800	600	3/4"	1/2"	70	63
OP-MGUD043	E3	2600	2.2	2 x 300	6	9	442	800	600	3/4"	1/2"	72	65
OP-MGUD057	G3	4600	2.3	2 x 355	8	9	555	1000	700	3/4"	1/2"	72	63
OP-MGUD068	H3	3600	4.7	2 x 355	8	9	555	1000	700	7/8"	1/2"	107	93
OP-MGUD080	J3	5400	4.7	2 x 400	8	9	555	1000	700	7/8"	1/2"	108	95
OP-MGUD107	L3	8600	5.1	2 x 450	10	9	671	1200	800	7/8"	1/2"	129	114
OP-MGUD148	M3	8200	6.8	2 x 450	10	9	671	1200	800	1"1/8	1/2"	141	126
OP-MGUD162	N4	9200	12.3	2 x 500	14	9	750	1350	870	1"1/8	5/8"	177	161

Optyma™ condensing units – R407C MBP Reciprocating

Nbr of fans	Test conditions	Unit	Version	Electrical code	Compressor	Amb. temp. °C	Capacity range in [W] at evaporating temperature [°C]					Power consumption (W)	Application range [°C]
			A02				-15°C	-10°C	-5°C	-0°C	+5°C		
	SH =10K	OP-MCZC030	114X5024	G	MTZ18	27°C	1323	1810	2357	2960	3605	985	38°C: -10°C till 10°C 43°C: -5°C till 0°C
			114X5000	D		38°C		1404	1879	2398	2955	1025	
			114X5012	E		43°C			1676	2157			
		OP-MCZC038	114X5025	G	MTZ22	27°C	1891	2494	3167	3907	4702	1342	
			114X5001	D		38°C		1962	2538	3165	3841	1380	
			114X5013	E		43°C			2264	2838			
		OP-MCZC048	114X5026	G	MTZ28	27°C	2408	3228	4150	5172	6277	1603	
			114X5002	D		38°C		2562	3363	4239	5187	1664	
			114X5014	E		43°C			3007	3818			
		OP-MCZC054	114X5027	G	MTZ32	27°C	2888	3747	4698	5737	6844	1834	
			114X5003	D		38°C		2997	3816	4703	5640	1909	
			114X5015	E		43°C			3423	4236			
		OP-MCZC060	114X5028	G	MTZ36	27°C	3420	4353	5379	6489	7658	2185	
			114X5004	D		38°C		3538	4428	5377	6367	2301	
			114X5016	E		43°C			3987	4864			
		OP-MCZC068	114X5005	D	MTZ40	27°C	3973	5037	6214	7502	8871	2575	
			114X5017	E		38°C		4143	5164	6264	7419	2743	
						43°C			4668	5686			
		OP-MCZC086	114X5029	G	MTZ50	27°C	4410	5712	7172	8784	10518	2797	
			114X5006	D		38°C		4559	5806	7177	8648	2916	
			114X5018	E		43°C			5195	6451			
		OP-MCZC096	114X5007	D	MTZ56	27°C	4848	6334	8018	9886	11910	2986	
			114X5019	E		38°C		5088	6534	8131	9866	3111	
						43°C			5874	7344			
		OP-MCZC108	114X5008	D	MTZ64	27°C	5888	7547	9442	11568	13896	3949	
			114X5020	E		38°C		6129	7744	9547	11549	4124	
						43°C			7002	8658			
		OP-MCZC121	114X5009	D	MTZ72	27°C	6682	8615	10817	13284	15970	4546	
			114X5021	E		38°C		7013	8902	10995	13307	4759	
						43°C			8045	9971			
		OP-MCZC136	114X5010	D	MTZ80	27°C	7494	9659	12088	14774	17669	5241	
			114X5022	E		38°C		7906	10000	12296	14763	5517	
						43°C			9050	11160			
		OP-MCZC171	114X5011	D	MTZ100	27°C	8314	10939	13891	17162	20680	6067	
			114X5023	E		38°C		8668	11183	13957	16945	6316	
						43°C			9996	12524			
		OP-MGZC215	114X5058	D	MTZ125	27°C	12154	15528	19327	23540	28116	8139	
			114X5073	E		38°C		12579	15864	19477	23419	8567	
						43°C			14298	17635			
		OP-MGZC242	114X5059	D	MTZ144	27°C	13280	17003	21176	25802	30818	9141	
			114X5074	E		38°C		13957	17609	21661	26068	9678	
						43°C			16051	19844			
		OP- MGZC271	114X5060	D	MTZ160	27°C	15857	19931	24522	29611	35128	10356	
			114X5075	E		38°C		16441	20394	24738	29478	10980	
						43°C			18528	22536			
		OP-MGZD030	114X5076	G	MTZ18	27°C	1483	2003	2592	3241	3945	894	
			114X5046	D		38°C	1116	1574	2088	2652	3261	946	
			114X5061	E		46°C			1748	2251	2791		
		OP-MGZD038	114X5077	G	MTZ22	27°C	2145	2801	3541	4361	5252	1180	
			114X5047	D		38°C	1674	2249	2891	3596	4360	1251	
			114X5062	E		46°C			2432	3054	3724		
		OP-MGZD048	114X5078	G	MTZ28	27°C	2625	3486	4460	5538	6713	1445	
			114X5048	D		38°C	2054	2818	3670	4605	5615	1534	
			114X5063	E		46°C			3094	3924	4816		
		OP-MGZD054	114X5079	G	MTZ32	27°C	3140	4045	5053	6156	7340	1667	
			114X5049	D		38°C	2490	3286	4161	5108	6117	1774	
			114X5064	E		46°C			3521	4355	5238		
		OP-MGZD060	114X5080	G	MTZ36	27°C	3756	4782	5927	7184	8537	1978	
			114X5050	D		38°C	3051	3958	4957	6036	7191	2136	
			114X5065	E		46°C			4239	5201	6218		
		OP-MGZD068	114X5051	D	MTZ40	27°C	4430	5614	6957	8449	10078	2285	
			114X5066	E		38°C	3679	4732	5903	7191	8587	2506	
						46°C			5110	6257	7490		
		OP-MGZD086	114X5081	G	MTZ50	27°C	4932	6370	8006	9830	11824	2542	
			114X5052	D		38°C	3932	5184	6594	8157	9865	2734	
			114X5067	E		46°C			5579	6957	8458		
		OP-MGZD096	114X5053	D	MTZ56	27°C	5261	6841	8640	10644	12829	2762	
			114X5068	E		38°C	4190	5573	7133	8860	10740	2944	
						46°C			6050	7576	9233		
		OP-MGZD108	114X5054	D	MTZ64	27°C	6439	8242	10314	12648	15229	3150	
			114X5069	E		38°C	5208	6763	8549	10563	12796	3391	
						46°C			7312	9083	11053		
		OP-MGZD121	114X5055	D	MTZ72	27°C	7126	9136	11421	13973	16769	3777	
			114X5070	E		38°C	5775	7524	9504	11703	14103	4033	
						46°C			8123	10054	12163		
		OP-MGZD136	114X5056	D	MTZ80	27°C	8286	10636	13310	16290	19550	4344	
			114X5071	E		38°C	6793	8874	11210	13790	16600	4713	
						46°C			9658	11942	14420		
		OP-MGZD171	114X5057	D	MTZ100	27°C	9362	12248	15537	19203	23212	5159	
			114X5072	E		38°C	7368	9877	12715	15868	19312	5539	
						46°C			10721	13490	16513		
		OP-MGZD215	114X5115	D	MTZ125	27°C	13245	16843	20912	25448	30413	6505	
			114X5118	E		38°C	10710	13885	17443	21377	25667	7077	
						46°C			14890	18385	22184		
		OP-MGZD242	114X5116	D	MTZ144	27°C	14269	18160	22555	27424	32727	7507	
			114X5119	E		38°C	11570	14999	18830	23049	27631	8106	
						46°C			16136	19873	23922		
		OP-MGZD271	114X5117	D	MTZ160	27°C	17185	21568	26558	32126	38232	8618	
			114X5120	E		38°C	14184	18042	22383	27198	32464	9388	
						46°C			19325	23588	28239		

Test condition
EN13215 **SH10K**
Superheat 10K

Electrical code
D: Compressor 400 V/3 phase/50 Hz, fan 400 V/3 phase/50 Hz
E: Compressor 400 V/3 phase/50 Hz, fan 230 V/1 phase/50 Hz
G: Compressor 230 V/1 phase/50 Hz, fan 230 V/1 phase/50 Hz

Version: A02: With receiver, stop valve, universal pressure switch, (KP17WB), flexible hoses and electrical box

Optyma™ condensing units – R407C MBP Reciprocating

Unit	Condenser coil			Condenser fan	Receiver volume [L]	Dimensions						Weight [kg]	
	Type	Air flow [m³/h]	Int. volume [dm³]	Fan blade Ø [mm]		Fig.	Height H [mm]	Width W [mm]	Length D [mm]	Suction line	Liquid line	Gross	Net
OP-MCZC030	A4	1200	1.2	1 × 300	3	5	408	500	600	1/2″	3/8″	54	45
OP-MCZC038	B4	1750	1.3	1 × 350	3	5	451	500	620	1/2″	3/8″	56	47
OP-MCZC048	C4	2150	2.3	1 × 350	6	5	555	630	650	1/2″	1/2″	64	57
OP-MCZC054	C4	2150	2.3	1 × 350	6	5	555	630	650	5/8″	1/2″	65	58
OP-MCZC060	D4	2000	3.1	1 × 350	6	5	555	630	650	5/8″	1/2″	68	61
OP-MCZC068	E4	3150	2.5	1 × 400	6	5	605	630	650	5/8″	1/2″	72	65
OP-MCZC086	F4	3300	3.1	1 × 400	8	5	656	755	700	7/8″	1/2″	95	83
OP-MCZC096	G4	3150	4.1	1 × 400	8	5	656	755	700	7/8″	1/2″	100	88
OP-MCZC108	H4	4300	4.1	1 × 500	8	5	656	755	700	7/8″	1/2″	113	101
OP-MCZC121	J4	6000	4.4	1 × 500	10	5	708	900	900	1″1/8	1/2″	127	113
OP-MCZC136	K4	6200	4.7	1 × 500	10	5	759	900	900	1″1/8	1/2″	140	126
OP-MCZC171	L4	5850	6.3	1 × 500	14	5	759	900	900	1″1/8	5/8″	162	147
OP-MGZC215	M4	11000	7.4	2 × 500	14	6	759	1350	820	1″1/8	5/8″	191	176
OP-MGZC242	M4	11000	7.4	2 × 500	14	6	759	1350	820	1″1/8	5/8″	194	179
OP- MGZC271	N4	9200	12.3	2 × 500	14	6	759	1350	820	1″1/8	5/8″	199	184
OP-MGZD030	C3	1300	1.7	2 × 254	3	6	392	700	500	1/2″	3/8″	56	46
OP-MGZD038	D3	2800	1.5	2 × 300	6	6	442	800	600	1/2″	1/2″	60	53
OP-MGZD048	E3	2600	2.2	2 × 300	6	6	442	800	600	1/2″	1/2″	64	57
OP-MGZD054	E3	2600	2.2	2 × 300	6	6	442	800	600	5/8″	1/2″	65	58
OP-MGZD060	G3	4600	2.3	2 × 355	8	6	555	1000	700	5/8″	1/2″	88	75
OP-MGZD068	H3	3600	4.7	2 × 355	8	6	555	1000	700	5/8″	1/2″	96	82
OP-MGZD086	H3	3600	4.7	2 × 355	8	6	555	1000	700	7/8″	1/2″	107	93
OP-MGZD096	H3	3600	4.7	2 × 355	8	6	555	1000	700	7/8″	1/2″	109	95
OP-MGZD108	J3	5400	4.7	2 × 400	10	6	555	1000	700	7/8″	1/2″	113	99
OP-MGZD121	J3	5400	4.7	2 × 400	10	6	555	1000	700	7/8″	1/2″	115	101
OP-MGZD136	L3	8600	5.1	2 × 450	10	6	671	1200	800	1″1/8	1/2″	133	118
OP-MGZD171	M3	8200	6.8	2 × 450	14	6	671	1200	800	1″1/8	5/8″	158	144
OP-MGZD215	N4	9200	12.25	2 × 500	14	6	759	1350	820	1″1/8	5/8″	196	180
OP-MGZD242	N4	9200	12.25	2 × 500	14	6	759	1350	820	1″1/8	5/8″	199	183
OP-MGZD271	U	14000	14.2	2 × 600	14	6	975	1500	870	1″1/8	5/8″	230	212

Condensing units – R290 LBP Reciprocating

Nbr of fans	Code number	Electric code	Compressor	Amb. Temp. °C	Capacity range (in W) at evaporating temperature (°C)								
					-35°C	-30°C	-25°C	-20°C	-15°C	-10°C	-5°C	0°C	+5°C
	114F1504	G	TL5CNK	32°C	120	152	188	229	273	320	370	421	474
	114F2507	G	NL7CNK	32°C	188	243	305	373	449	531	619	712	808
	114F2509	G	NL9CNK	32°C	214	275	343	419	500	588	680	775	-
	114F3500	G	SC10CNX	32°C	217	282	358	445	545	656	778	913	1058
	114F3501	G	SC12CNX	32°C	284	358	446	547	665	799	949	1116	1298
	114F4501	G	SC12CNX	32°C	292	369	462	571	698	846	1014	1202	1410
	114F3502	G	SC15CNX	32°C	340	440	554	680	818	968	1127	-	-
	114F3503	G	SC18CNX	32°C	374	491	621	766	924	1096	-	-	-
	114F4503	G	SC18CNX	32°C	395	519	658	814	986	1173	1376	1594	-

Test condition

	CECOMAF
Ambient temperature	32°C
Suction gas temperature	32°C

Code number	Condenser coil			Condenser fan	Receiver volume (L)	Dimensions						Weight (kg)	
	Type	Air flow (m^3/h)	Int. Volume (dm^3)	Fan blade Ø (mm)		Fig.	Height (mm)	Width (mm)	Length (mm)	Suction line	Liquid line	Gross	Net
114F1504	BG1	243	0.13	172		8441	198	271	410	6 mm / 1/4"	6 mm / 1/4"	13.5	11.4
114F2507	BG2	231	0.25	200		8441	226	305	432	8 mm / 3/8"	6 mm / 1/4"	19.1	15.1
114F2509	BG2	231	0.25	200		8441	225	298	432	8 mm / 3/8"	6 mm / 1/4"	19.1	15.1
114F3500	BG3	518	0.31	230		8441	257	314	487	8 mm / 3/8"	6 mm / 1/4"	21.6	15.3
114F3501	BG3	518	0.31	230	No receiver	8441	257	314	487	8 mm / 3/8"	6 mm / 1/4"	21.6	15.3
114F4501	BG4	631	0.40	254		8441	296	314	494	8 mm / 3/8"	6 mm / 1/4"	22	19.8
114F3502	BG3	518	0.31	230		8441	257	314	487	10 mm / 3/8"	6 mm / 1/4"	21.6	15.3
114F3503	BG3	518	0.31	230		8441	257	314	487	10 mm / 3/8"	6 mm / 1/4"	21.6	15.3
114F4503	BG4	631	0.40	254		8441	296	314	494	10 mm / 3/8"	6 mm / 1/4"	22	19.8

Electrical characteristics - 230 V/1 phase

Code number	LRA (A)	MCC Fan (A)
	230 V / 1 phase	230 V/ 1 phase
114F1504	5.7	0.19
114F2507	10.4	0.19
114F2509	10.4	0.19
114F3500	13.2	0.25
114F3501	13.2	0.25
114F4501	13.2	0.39
114F3502	14.8	0.25
114F3503	19.5	0.25
114F4503	19.5	0.39

Automatic controls

Code number	Filter drier type	Sight glass type	Pressure control type	Thermostat type	Solenoid valve type -25°C	Coil code number
114F1504	DCLE032S	SGI 6	KP1 / KP7W	RT	EVRE3	018F6701
114F2507	DCLE032S	SGI 6	KP1 / KP7W	RT	EVRE3	018F6701
114F2509	DCLE032S	SGI 6	KP1 / KP7W	RT	EVRE3	018F6701
114F3500	DCLE032S	SGI 6	KP1 / KP7W	RT	EVRE3	018F6701
114F3501	DCLE032S	SGI 6	KP1 / KP7W	RT	EVRE3	018F6701
114F4501	DCLE032S	SGI 6	KP1 / KP7W	RT	EVRE3	018F6701
114F3502	DCLE032S	SGI 6	KP1 / KP7W	RT	EVRE3	018F6701
114F3503	DCLE032S	SGI 6	KP1 / KP7W	RT	EVRE3	018F6701
114F4503	DCLE032S	SGI 6	KP1 / KP7W	RT	EVRE3	018F6701

Notes

Optyma™ condensing units – LBP - R404A/R507 Reciprocating

Electrical characteristics - 230 V/1 phase

Unit	LRA compressor [A] 230 V/ 1 phase	MCC compressor [A] 230 V/ 1 phase	MCC Fan [A] 230 V/ 1 phase
OP-LCHC004	5.7	-	0.19
OP-LCHC006	8.2	-	0.19
OP-LCHC008 (FR)	10	-	0.25
OP-LCHC007	10.4	-	0.25
OP-LCHC008 (NL)	13.7	-	0.25
OP-LCHC010	14.8	-	0.39
OP-LCHC012 (SC12CLX)	14.8	-	0.39
OP-LCHC012 (SC12CLX.2)	19.6	-	0.39
OP-LCHC015 (SC15CLX)	18.6	-	0.39
OP-LCHC015 (SC15CLX.2)	19.6	-	0.39
OP-LCHC018 (SC18CLX)	20	-	0.39
OP-LCHC018 (SC18CLX.2)	23.5	-	0.39
OP-LCHC021	23.4	-	0.39
OP-LCHC026	25.7	-	0.75
OP-LCHC034	40	-	0.75
OP-LCHC048	37	11	0.85
OP-LCHC068	53	17	1.2
OP-LGHC048	37	11	2 × 0.32
OP-LGHC068	53	17	2 × 0.85

Electrical characteristics - 400 V/3 phase

Unit	LRA compressor [A] 400 V/ 3 phase	MCC compressor [A] 400 V/ 3 phase	MCC Fan [A] 230 V/ 1 phase	MCC Fan [A] 400 V/3 phase
OP-LCHC048	16	4.8	0.85	0.35
OP-LCHC068	25	8.4	1.2	0.5
OP-LCHC096	32	10.1	1.2	0.5
OP-LCHC108	45	12.1	1.3	0.7
OP-LCHC136	51	14.3	1.3	0.7
OP-LCHC215	74	22.3	3.4	1.2
OP-LCHC271	96	27	3.4	1.2
OP-LGHC048	16	4.8	2 × 0.32	-
OP-LGHC068	25	8.4	2 × 0.85	2 × 0.35
OP-LGHC096	32	10.1	2 × 0.85	2 × 0.35
OP-LGHC108	45	12.1	2 × 1.2	2 × 0.5
OP-LGHC136	51	14.3	2× 1.2	2 × 0.5
OP-LGHC215	74	22.3	2 × 1.7	2 × 1.2
OP-LGHC271	96	27	2 × 1.7	2 × 1.2

Optyma™ condensing units – LBP - R404A/R507 Reciprocating

Spare parts

Unit	Condenser	Receiver	Rotalock valve		Fan motor		Filter drier Type	Sight glass type	Pressure control type	Solenoid valve type
			Suction	Discharge	230Volts	400 Volts				
OP-LCHC004	118U0029	118U0517	-	-	118U0032	-	DML/DCL 032	SGN 6	KP 1/KP 7/KP 17	EVR 2
OP-LCHC006	118U0029	118U0517	-	-	118U0032	-	DML/DCL 032	SGN 6	KP 1/KP 7/KP 17	EVR 2
OP-LCHC008	118U0030	118U0523	-	-	118U0033	-	DML/DCL 032	SGN 6	KP 1/KP 7/KP 17	EVR 2
OP-LCHC007	118U0030	118U0523	-	-	118U0033	-	DML/DCL 032	SGN 6	KP 1/KP 7/KP 17	EVR 2
OP-LCHC008	118U0030	118U0523	-	-	118U0033	-	DML/DCL 032	SGN 6	KP 1/KP 7/KP 17	EVR 2
OP-LCHC010	118U0030	118U0523	-	-	118U0033	-	DML/DCL 032	SGN 6	KP 1/KP 7/KP 17	EVR 2
OP-LCHC012	118U0031	118U0523	-	-	118U0034	-	DML/DCL 032	SGN 6	KP 1/KP 7/KP 17	EVR 3
OP-LCHC012	118U0031	118U0523	-	-	118U0034	-	DML/DCL 032	SGN 6	KP 1/KP 7/KP 17	EVR 3
OP-LCHC015	118U0031	118U0523	-	-	118U0034	-	DML/DCL 032	SGN 6	KP 1/KP 7/KP 17	EVR 3
OP-LCHC015	118U0031	118U0523	-	-	118U0034	-	DML/DCL 032	SGN 6	KP 1/KP 7/KP 17	EVR 3
OP-LCHC018	118U0031	118U0523	-	-	118U0034	-	DML/DCL 032	SGN 6	KP 1/KP 7/KP 17	EVR 3
OP-LCHC018	118U0031	118U0523	-	-	118U0034	-	DML/DCL 032	SGN 6	KP 1/KP 7/KP 17	EVR 3
OP-LCHC021	118U0031	118U0523	-	-	118U0034	-	DML/DCL 032	SGN 6	KP 1/KP 7/KP 17	EVR 3
OP-LCHC026	118U0054	118U0078	-	-	118U0058	-	DML/DCL 032	SGN 10	KP 1/KP 7/KP 17	EVR 3
OP-LCHC034	118U0069	118U0078	-	-	118U0058	-	DML/DCL 032	SGN 10	KP 1/KP 7/KP 17	EVR 3
OP-LCHC048	118U8000	8168179	7968014	7968012	8176043	8176044	DML/DCL 053	SGN 10	KP 1/KP 7/KP 17	EVR 3
OP-LCHC068	118U8002	8168180	7968014	7968013	8176045	8176046	DML/DCL 084	SGN 12	KP 1/KP 7/KP 17	EVR 3
OP-LCHC096	118U8003	8168180	7968017	7968014	8176045	8176046	DML/DCL 084	SGN 12	KP 1/KP 7/KP 17	EVR 3
OP-LCHC108	118U8004	8168180	7968017	7968014	8176047	8176048	DML/DCL 084	SGN 12	KP 1/KP 7/KP 17	EVR 3
OP-LCHC136	118U8006	8168181	7968017	7968014	8176047	8176048	DML/DCL 084	SGN 12	KP 1/KP 7/KP 17	EVR 6
OP-LCHC215	118U8008	8168183	7968018	7968015	118U8023	118U8017	DML/DCL 165	SGN 16	KP 1/KP 7/KP 17	EVR 6
OP-LCHC271	118U8010	8168183	7968018	7968015	118U8023	118U8017	DML/DCL 165	SGN 16	KP 1/KP 7/KP 17	EVR 6
OP-LGHC048	8174036	8168179	7968014	7968012	8176018	8176039	DML/DCL 053	SGN 10	KP 1/KP 7/KP 17	EVR 3
OP-LGHC068	8174037	8168180	7968014	7968013	8176043	8176044	DML/DCL 084	SGN 12	KP 1/KP 7/KP 17	EVR 3
OP-LGHC096	8174038	8168180	7968017	7968014	8176043	8176044	DML/DCL 084	SGN 12	KP 1/KP 7/KP 17	EVR 3
OP-LGHC108	8174041	8168181	7968017	7968014	8176045	8176046	DML/DCL 084	SGN 12	KP 1/KP 7/KP 17	EVR 3
OP-LGHC136	8174041	8168181	7968017	7968014	8176045	8176046	DML/DCL 084	SGN 12	KP 1/KP 7/KP 17	EVR 6
OP-LGHC215	8174044	8168183	7968018	7968015	8176070	8176069	DML/DCL 165	SGN 16	KP 1/KP 7/KP 17	EVR 6
OP-LGHC271	8174044	8168183	7968018	7968015	8176070	8176069	DML/DCL 165	SGN 16	KP 1/KP 7/KP 17	EVR 6

Note
LRA (Locked Rotor Amps)
MCC (Maximum Continuous Current)

Optyma™ condensing units – R404A/R507 MBP Reciprocating

Electrical characteristics - 230 V/1 phase

Unit	LRA compressor [A] 230 V/ 1 phase	MCC compressor [A] 230 V/ 1 phase	MCC Fan [A] 230 V/ 1 phase
OP-MCHC004	7.5	-	0.19
OP-MCHC006	10.0	-	0.25
OP-MCHC007	20.0	-	0.39
OP-MCHC010	18.4	-	0.39
OP-MCHC012	23.4	-	0.39
OP-MCHC015	23.5	-	0.48
OP-MCHC018	23.4	-	0.48
OP-MCHC021	24.4	-	0.75
OP-MCHC026	34.6	-	0.75
OP-MCHC034	45.7	-	0.62
OP-MCZC030	40	10	0.85
OP-MCZC038	41	15	1.2
OP-MCZC048	55	16	1.2
OP-MCZC054	70	20	1.2
OP-MCZC060	70	20	1.2
OP-MCZC086	92	29	1.3
OP-MGZD030	40	10	2×0.32
OP-MGZD038	41	15	2×0.85
OP-MGZD048	55	16	2×0.85
OP-MGZD054	70	20	2×0.85
OP-MGZD060	70	20	2×1.2
OP-MGZD086	92	29	2×1.2

Electrical characteristics - 400 V/3 phase

Unit	LRA compressor [A] 400 V/ 3 phase	MCC compressor [A] 400 V/ 3 phase	MCC Fan [A] 230 V/ 1 phase	MCC Fan [A] 400 V/ 3 phase
OP-MCZC030	20	5	0.85	0.35
OP-MCZC038	16	6	1.2	0.5
OP-MCZC048	23	7.5	1.2	0.5
OP-MCZC054	25	8	1.2	0.5
OP-MCZC060	30	9	1.2	0.5
OP-MCZC068	38	10	1.3	0.7
OP-MCZC086	48.5	11.5	1.3	0.7
OP-MCZC096	64	12	1.3	0.7
OP-MCZC108	64	14	3.4	1.2
OP-MCZC121	80	17	3.4	1.2
OP-MCZC136	80	19	3.4	1.2
OP-MCZC171	90	22	3.4	1.2
OP-MGZC215	105	27	2 × 3.4	2 × 1.2
OP-MGZC242	115	30	2 × 3.4	2 × 1.2
OP- MGZC271	140	36	2 × 3.4	2 × 1.2
OP-MGZD030	20	5	2×0.32	-
OP-MGZD038	16	6	2×0.85	2 × 0.35
OP-MGZD048	23	7.5	2×0.85	2 × 0.35
OP-MGZD054	25	8	2×0.85	2 × 0.35
OP-MGZD060	30	9	2×1.2	2 × 0.5
OP-MGZD068	38	10	2×1.2	2 × 0.5
OP-MGZD086	48.5	11.5	2×1.2	2 × 0.5
OP-MGZD096	64	12	2×1.2	2 × 0.5
OP-MGZD108	64	14	2×1.3	2 × 0.7
OP-MGZD121	80	17	2×1.3	2 × 0.7
OP-MGZD136	80	19	2×1.7	2 × 1.2
OP-MGZD171	90	22	2×1.7	2 × 1.2
OP-MGZD215	105	27	2×3.4	2 × 1.2
OP-MGZD242	115	30	2×3.4	2 × 1.2
OP-MGZD271	140	36	2×3	2 × 1.6

Optyma™ condensing units – R404A/R507 MBP Reciprocating

Spare parts

Unit	Condenser	Receiver	Rotolock valve		Fan motor		Filter drier type	Sight glass type	Pressure control type	Solenoid valve type
			Suction	Discharge	230 Volts	400 Volts				
OP-MCHC004	118U0029	118U0517	-	-	118U0032	-	DML/DCL 052	SGN 6	KP1/KP7/KP17	EVR 2
OP-MCHC006	118U0030	118U0517	-	-	118U0033	-	DML/DCL 052	SGN 6	KP1/KP7/KP17	EVR 2
OP-MCHC007	118U0031	118U0523	-	-	118U0034	-	DML/DCL 052	SGN 6	KP1/KP7/KP17	EVR 2
OP-MCHC010	118U0031	118U0523	-	-	118U0034	-	DML/DCL 052	SGN 6	KP1/KP7/KP17	EVR 2
OP-MCHC012	118U0031	118U0523	-	-	118U0034	-	DML/DCL 052	SGN 6	KP1/KP7/KP17	EVR 3
OP-MCHC015	118U0031	118U0523	-	-	118U0034	-	DML/DCL 052	SGN 6	KP1/KP7/KP17	EVR 3
OP-MCHC018	118U0031	118U0523	-	-	118U0034	-	DML/DCL 052	SGN 6	KP1/KP7/KP17	EVR 3
OP-MCHC021	118U0031	118U0523	-	-	118U0034	-	DML/DCL 052	SGN 6	KP1/KP7/KP17	EVR 3
OP-MCHC026	118U0069	118U0078	-	-	118U0058	-	DML/DCL 052	SGN10	KP1/KP7/KP17	EVR 3
OP-MCHC034	118U0070	118U0078	-	-	118U0059	-	DML/DCL 052	SGN10	KP1/KP7/KP17	EVR 3
OP-MCZC030	118U8000	8168179	7968013	7968012	8176043	8176044	DML/DCL053	SGN10	KP1/KP7/KP17	EVR 3
OP-MCZC038	118U8001	8168179	7968013	7968012	8176045	8176046	DML/DCL053	SGN10	KP1/KP7/KP17	EVR 3
OP-MCZC048	118U8002	8168180	7968013	7968013	8176045	8176046	DML/DCL084	SGN12	KP1/KP7/KP17	EVR 3
OP-MCZC054	118U8002	8168180	7968014	7968013	8176045	8176046	DML/DCL084	SGN12	KP1/KP7/KP17	EVR 3
OP-MCZC060	118U8003	8168180	7968014	7968013	8176045	8176046	DML/DCL084	SGN12	KP1/KP7/KP17	EVR 3
OP-MCZC068	118U8004	8168180	7968014	7968013	8176047	8176048	DML/DCL084	SGN12	KP1/KP7/KP17	EVR 3
OP-MCZC086	118U8005	8168181	7968017	7968014	8176047	8176048	DML/DCL084	SGN12	KP1/KP7/KP17	EVR 3
OP-MCZC096	118U8006	8168181	7968017	7968014	8176047	8176048	DML/DCL084	SGN12	KP1/KP7/KP17	EVR 3
OP-MCZC108	118U8007	8168181	7968017	7968014	118U8023	118U8017	DML/DCL084	SGN12	KP1/KP7/KP17	EVR 3
OP-MCZC121	118U8008	8168182	7968018	7968015	118U8023	118U8017	DML/DCL084	SGN12	KP1/KP7/KP17	EVR 3
OP-MCZC136	118U8010	8168182	7968018	7968015	118U8023	118U8017	DML/DCL084	SGN12	KP1/KP7/KP17	EVR 3
OP-MCZC171	118U8010	8168183	7968018	7968015	118U8023	118U8017	DML/DCL165	SGN16	KP1/KP7/KP17	EVR 6
OP-MGZC215	118U8012	8168183	7968018	7968016	118U8023	118U8017	DML/DCL165	SGN16	KP1/KP7/KP17	EVR 6
OP-MGZC242	118U8012	8168183	7968018	7968016	118U8023	118U8017	DML/DCL165	SGN16	KP1/KP7/KP17	EVR 6
OP- MGZC271	118U8012	8168183	7968018	7968016	118U8023	118U8017	DML/DCL165	SGN16	KP1/KP7/KP17	EVR 6
OP-MGZD030	8174036	8168179	7968013	7968012	8176018	8176039	DML/DCL053	SGN10	KP1/KP7/KP17	EVR 3
OP-MGZD038	8174037	8168180	7968013	7968013	8176043	8176044	DML/DCL053	SGN10	KP1/KP7/KP17	EVR 3
OP-MGZD048	8174038	8168180	7968013	7968013	8176043	8176044	DML/DCL084	SGN12	KP1/KP7/KP17	EVR 3
OP-MGZD054	8174038	8168180	7968014	7968013	8176043	8176044	DML/DCL084	SGN12	KP1/KP7/KP17	EVR 3
OP-MGZD060	8174041	8168181	7968014	7968013	8176045	8176046	DML/DCL084	SGN12	KP1/KP7/KP17	EVR 3
OP-MGZD068	8174041	8168181	7968014	7968013	8176045	8176046	DML/DCL084	SGN12	KP1/KP7/KP17	EVR 3
OP-MGZD086	8174041	8168181	7968017	7968014	8176045	8176046	DML/DCL084	SGN12	KP1/KP7/KP17	EVR 3
OP-MGZD096	8174041	8168181	7968017	7968014	8176045	8176046	DML/DCL084	SGN12	KP1/KP7/KP17	EVR 3
OP-MGZD108	8174042	8168182	7968017	7968014	8176047	8176048	DML/DCL084	SGN12	KP1/KP7/KP17	EVR 3
OP-MGZD121	8174042	8168182	7968017	7968014	8176047	8176048	DML/DCL084	SGN12	KP1/KP7/KP17	EVR 3
OP-MGZD136	8174044	8168182	7968018	7968015	8176070	8176069	DML/DCL084	SGN12	KP1/KP7/KP17	EVR 3
OP-MGZD171	8174045	8168183	7968018	7968015	8176070	8176069	DML/DCL165	SGN16	KP1/KP7/KP17	EVR 6
OP-MGZD215	118U8012	8168183	7968018	7968016	118U8023	118U8017	DML/DCL165	SGN16	KP1/KP7/KP17	EVR 6
OP-MGZD242	118U8012	8168183	7968018	7968016	118U8023	118U8017	DML/DCL165	SGN16	KP1/KP7/KP17	EVR 6
OP-MGZD271	8174048	8168183	7968018	7968016	8176098	8176099	DML/DCL165	SGN16	KP1/KP7/KP17	EVR 6

Note
LRA (Locked Rotor Amps)
MCC (Maximum Continuous Current)

Optyma™ condensing units – R404A/R507 MBP scroll

Electrical characteristics - 230 V/1 phase

Unit	LRA compressor [A] 230 V/ 1 phase	MCC compressor [A] 230 V/ 1 phase	MCC Fan [A] 230 V/ 1 phase
OP-MCUC034	60	19	1.2
OP-MCUC043	97	23	1.2
OP-MCUC057	97	27	1.3
OP-MCUC068	127	32	1.3
OP-MGUD034	60	19	2×0.85
OP-MGUD043	97	23	2×0.85
OP-MGUD057	97	27	2×1.2
OP-MGUD068	127	32	2×1.3

Electrical characteristics - 400 V/3 phase

Unit	LRA compressor [A] 400 V/ 3 phase	MCC compressor [A] 400 V/ 3 phase	MCC Fan [A] 230 V/ 1 phase	MCC Fan [A] 400 V/ 3 phase
OP-MCUC034	30	7	1.2	0.5
OP-MCUC043	45	9.5	1.2	0.5
OP-MCUC057	45	11	1.3	0.7
OP-MCUC068	60	13	1.3	0.7
OP-MCUC080	70	15	3.4	1.2
OP-MCUC107	87	16	3.4	1.2
OP-MGUC149	110	24	2×1.7	2 × 1.2
OP-MGUC162	140	25	2×3.4	2 × 1.2
OP-MGUD034	30	7	2×0.85	2 × 0.35
OP-MGUD043	45	9.5	2×0.85	2 × 0.35
OP-MGUD057	45	11	2×1.2	2 × 0.5
OP-MGUD068	60	13	2×1.3	2 × 0.7
OP-MGUD080	70	15	2×1.3	2 × 0.7
OP-MGUD107	87	16	2×1.7	2 × 1.2
OP-MGUD148	110	24	2×1.7	2 × 1.2
OP-MGUD162	140	25	2×3.4	2 × 1.2

Optyma™ condensing units – R404A/R507 MBP scroll

Spare parts (components)

Unit	Condenser	Receiver	Rotalock valve		Fan motor		Filter drier type	Sight glass type	Pressure control type	Solenoid valve type
			Suction	Discharge	230Volts	400 Volts				
OP-MCUC034	118U8002	8168180	7968015	7968013	8176045	8176046	DML/DCL084	SGN12	KP1/KP5/KP17	EVR3
OP-MCUC043	118U8002	8168180	7968015	7968013	8176045	8176046	DML/DCL084	SGN12	KP1/KP5/KP17	EVR6
OP-MCUC057	118U8004	8168180	7968015	7968013	8176047	8176048	DML/DCL084	SGN12	KP1/KP5/KP17	EVR6
OP-MCUC068	118U8005	8168181	7968016	7968013	8176047	8176048	DML/DCL084	SGN12	KP1/KP5/KP17	EVR6
OP-MCUC080	118U8007	8168181	7968016	7968013	118U8023	118U8017	DML/DCL084	SGN12	KP1/KP5/KP17	EVR6
OP-MCUC107	118U8010	8168182	7968016	7968015	118U8023	118U8017	DML/DCL164	SGN12	KP1/KP5/KP17	EVR6
OP-MGUC149	8174044	8168182	7968018	7968016	8176070	8176069	DML/DCL164	SGN12	KP1/KP5/KP17	EVR10
OP-MGUC162	118U8012	8168183	7968018	7968016	118U8023	118U8017	DML/DCL165	SGN16	KP1/KP5/KP17	EVR15
OP-MGUD034	8174037	8168180	7968015	7968013	8176043	8176044	DML/DCL084	SGN12	KP1/KP5/KP17	EVR3
OP-MGUD043	8174038	8168180	7968015	7968013	8176043	8176044	DML/DCL084	SGN12	KP1/KP5/KP17	EVR6
OP-MGUD057	8174041	8168181	7968015	7968013	8176045	8176046	DML/DCL084	SGN12	KP1/KP5/KP17	EVR6
OP-MGUD068	8174041	8168181	7968016	7968013	8176045	8176046	DML/DCL084	SGN12	KP1/KP5/KP17	EVR6
OP-MGUD080	8174042	8168181	7968016	7968013	8176047	8176048	DML/DCL084	SGN12	KP1/KP5/KP17	EVR6
OP-MGUD107	8174044	8168182	7968016	7968015	8176070	8176069	DML/DCL164	SGN12	KP1/KP5/KP17	EVR6
OP-MGUD148	8174045	8168182	7968018	7968016	8176070	8176069	DML/DCL164	SGN12	KP1/KP5/KP17	EVR10
OP-MGUD162	118U8012	8168183	7968018	7968016	118U8023	118U8017	DML/DCL165	SGN16	KP1/KP5/KP17	EVR15

Note
LRA (Locked Rotor Amps)
MCC (Maximum Continuous Current

Optyma™ condensing units – R134a LBP/MBP/HBP reciprocating

Electrical characteristics - 230 V/1 phase

Unit	LRA compressor [A] 230 V/ 1 phase	MCC Fan [A] 230 V/ 1 phase
OP-UCGC003	4.9	0.19
OP-UCGC004	5.1	0.19
OP-UCGC005	5.7	0.19
OP-UCGC006	7.5	0.19
OP-UCGC007	8.1	0.19
OP-UCGC008	8.2	0.19
OP-UCGC010	10	0.19
OP-UCGC011	10	0.25
OP-UCGC012	12.6	0.25
OP-UCGC015	14.8	0.39
OP-UCGC018	18.6	0.39
O P-UCGC021	21.8	0.39
OP-UCGC026	20.2	0.75
OP-UCGC034	25.7	0.75

Spare parts (components)

Unit	Condenser	Receiver	Fan motor	Filter drier Type	Sight glass type	Pressure control type	Solenoid valve type
			230 Volts				
OP-UCGC003	118U0028	118U0517	118U0032	DML/DCL032	SGN6	KP1/KP5/KP17	EVR2
OP-UCGC004	118U0028	118U0517	118U0032	DML/DCL032	SGN6	KP1/KP5/KP17	EVR2
OP-UCGC005	118U0028	118U0517	118U0032	DML/DCL032	SGN6	KP1/KP5/KP17	EVR2
OP-UCGC006	118U0029	118U0517	118U0032	DML/DCL032	SGN6	KP1/KP5/KP17	EVR2
OP-UCGC007	118U0029	118U0517	118U0032	DML/DCL032	SGN6	KP1/KP5/KP17	EVR2
OP-UCGC008	118U0029	118U0517	118U0032	DML/DCL032	SGN6	KP1/KP5/KP17	EVR2
OP-UCGC010	118U0029	118U0517	118U0032	DML/DCL032	SGN6	KP1/KP5/KP17	EVR2
OP-UCGC011	118U0030	118U0523	118U0033	DML/DCL032	SGN6	KP1/KP5/KP17	EVR2
OP-UCGC012	118U0030	118U0523	118U0033	DML/DCL052	SGN6	KP1/KP5/KP17	EVR3
OP-UCGC015	118U0031	118U0523	118U0033	DML/DCL052	SGN6	KP1/KP5/KP17	EVR3
OP-UCGC018	118U0031	118U0523	118U0033	DML/DCL052	SGN6	KP1/KP5/KP17	EVR3
O P-UCGC021	118U0031	118U0523	118U0033	DML/DCL052	SGN6	KP1/KP5/KP17	EVR3
OP-UCGC026	118U0069	118U0078	118U0058	DML/DCL052	SGN6	KP1/KP5/KP17	EVR3
OP-UCGC034	118U0069	118U0078	118U0058	DML/DCL052	SGN6	KP1/KP5/KP17	EVR3

Note
LRA (Locked Rotor Amps)
MCC (Maximum Continuous Current

Optyma™ condensing units – Designation system for the Optyma™ standard programme

(additional programme frequency etc.: please contact your local wholesaler)

1. Application
2. Platform or design
3. Refrigerant
4. Condenser option
5. Displacement
6. Compressor platform
7. Version
8. Electrical code

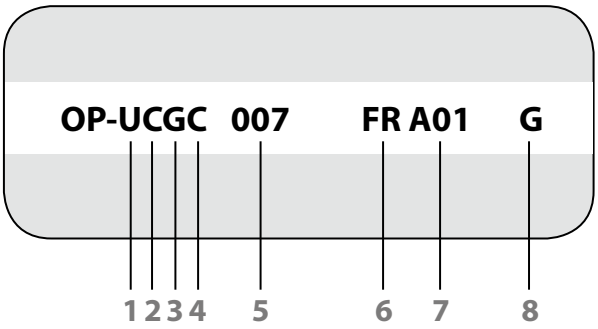

1	L = Low M = Medium U = Low / Medium / High	**5**	012 = 12 cm^3 007 = 7.5 cm^3
2	**C:** Air cooled condensing unit with 1 fan **G:** Air cooled condensing unit with 2 fans	**6**	TL FR NL SC GS NT MT ML
3	G = R134a H = R404A/R507 C = R407C M = R22 Z = R404A/R134a/R507/R407C U = R404A/R134a/R507/R407C/R22	**7**	A00 = Without valves and receiver for capillary tubes A01 = Basic with bracket and copper pipes for KP A02 = With receiver, stop valves, universal pressure switch (KP17WB), flexible hoses and electrical box A04 = A01 + KP17WB + FSA-kit + power cord on most units A05 = A01 but solder valve for inch tubes
4	C = Standard D = With oversized condenser (for higher ambient temperature and / or higher efficiency)	**8**	**A:** Compressor 220 V/1~/50+60 Hz, fan 220 V/1~/50+60 Hz **G:** Compressor 220 V/1~/50 Hz, fan 220 V/1~/50 Hz **D:** Compressor 400 V/3~/50 Hz, fan 400 V/3~/50 Hz **E:** Compressor 400 V/3~/50 Hz, fan 230 V/1~/50 Hz

Optyma™ condensing units – Dimensions

①

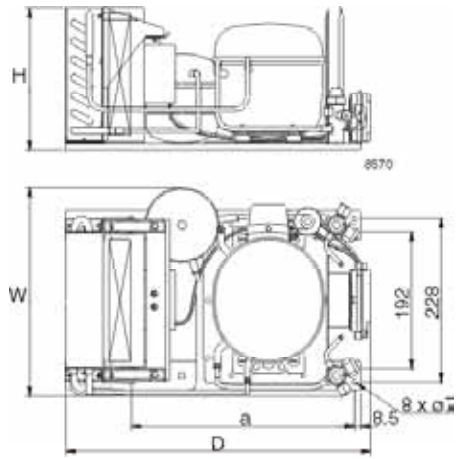

②

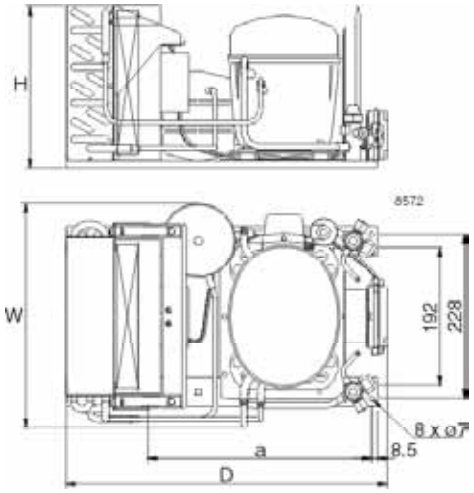

③

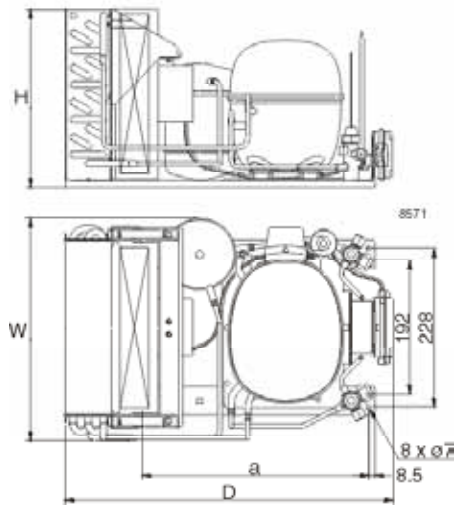

④

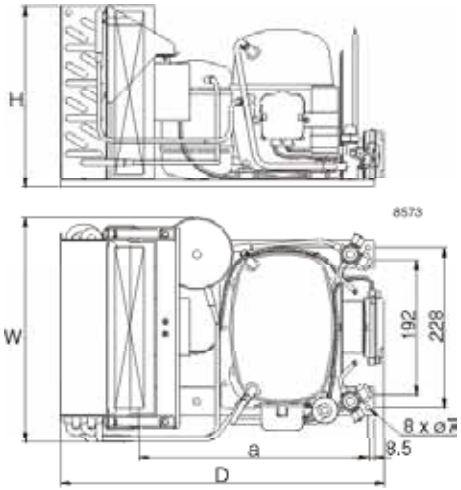

⑤

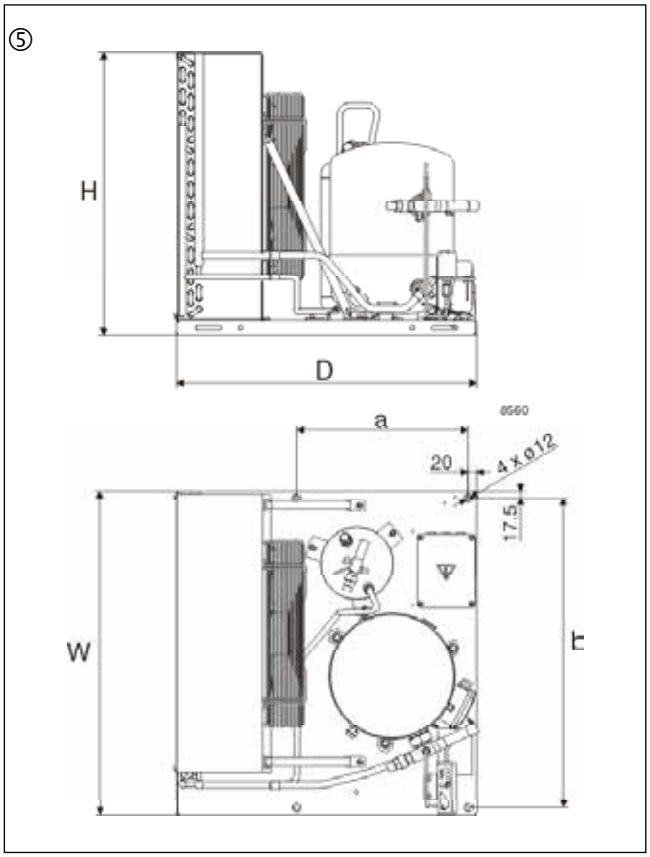

Optyma™ condensing units – Dimensions

⑥

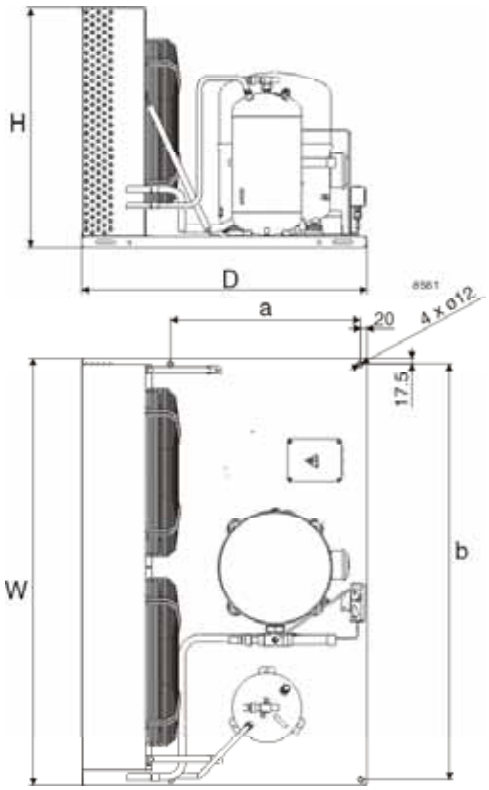

⑦

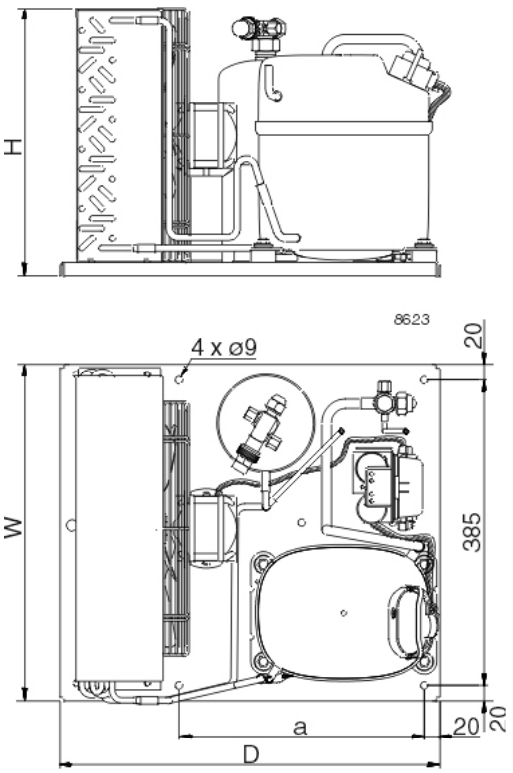

⑧

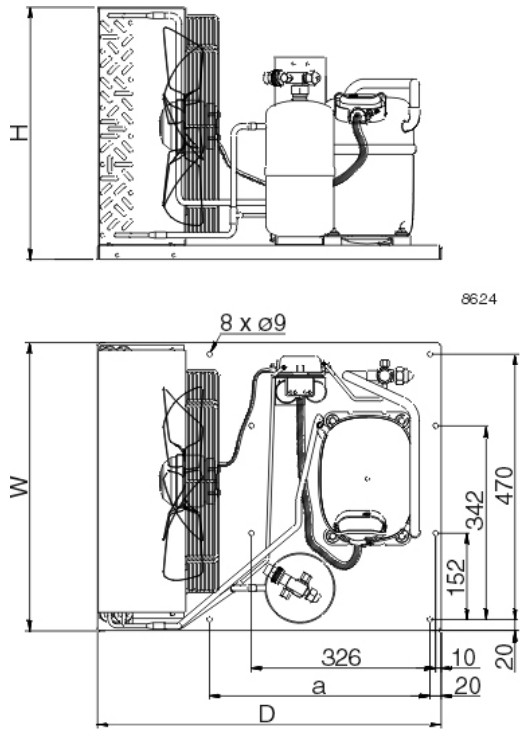

⑨

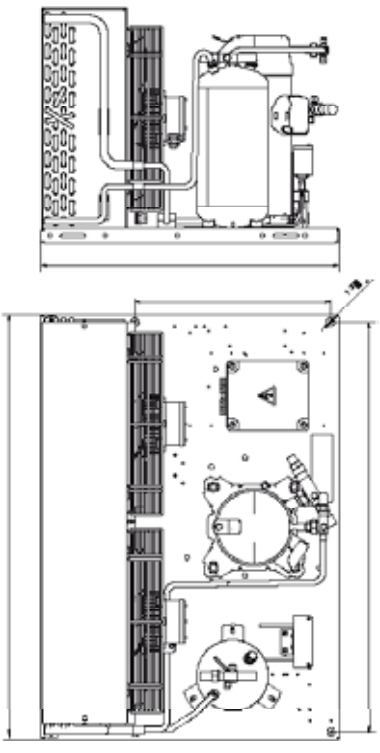

Optyma™ Control

The Optyma™ Control is particularly suitable for the Optyma™ and Optyma Plus™ condensing units from Danfoss but is also compatible with other condensing units on the market. The control features an attractive new design and simple flexible programming.
It offers both control and protection in a single unit, thanks to the unique built-in differential magneto-thermic circuit breaker, which guarantees safety by cutting the general power supply.

Features of Optyma™ Control, single-phase

- Guaranteed certified safety and protection thanks to incorporated differential magnetothermic circuit breaker, which cuts the general power supply.
- Simple wiring and live outputs.
- New hinged cover for ease of installation and opening.
- Transparent cover for access to magnetothermic breaker, all with IP65 protection rating.
- Simple, flexible programming for optimum versatility.
- Stylish new design.
- Compressor can be run in pump-down stop mode.
- Integration of control and protection in a single room-dedicated unit reduces installation time and costs.

Features of Optyma™ Control, three-phase

- Direct control of the compressor, condenser fans, compressor oil heater, defrosting heaters, evaporator fans, solenoid valve, room light and all standard-compliant electrical safeguards.
- Differential magnetothermic circuit breaker (for cutting the general power supply) accessible from the front panel.
- Adjustable motor circuit breaker for compressor protection accessible from the front panel.
- Easy wiring on the internal terminal block.
- Selection of functioning mode for the compressor (pumpdown / thermostat).
- Auxiliary relay with activation configurable by parameter.
- Transparent cover for access to magnetothermic circuit breaker, all with IP65 protection rating.
- Electronic control with wide LED display and easy-to-use buttons.
- Status signaling with LED icons.

Technical data and ordering

Optyma™ Control AK-RC 101, single-phase

Power supply

Voltage	230 V a.c ± 10% 50/60 Hz
Max absorbed power (electronic control)	~ 7 VA

Ambient conditions

Operating temperature	-5 to +50°C
Storage temperature	-30 to +70°C
Relative humidity	< 90% RH

General characteristics

Connectable sensor types	NTC 10K 1%
Resolution	0.1 °K
Probe read precision	± 0.5 °K
Read range	-45…+45 °C

Output characteristics – max. applicable load (230 V AC)

Compressor	1500 W (AC3)
Defrost	3000 W (AC1)
Fans	500 W (AC3)
Room light	800 W (AC1)
Configurable alarm contact / aux (voltage-free contact)	100 W

General electric protection

Bipolar differential magnetothermic circuit breaker	16A Id = 300 mA switching power 4.5 kA Id = 30 mA (on request)

Insulation and mechanical characteristics

Cover protection rating	IP65
Cover material	self-extinguishing ABS
Type of insulation	Class II
Box dimensions	262 x 168 x 97

Ordering

AK-RC 101	**Code no.**
OPYTMA™ Control, single-phase	080Z3200

Connection diagram

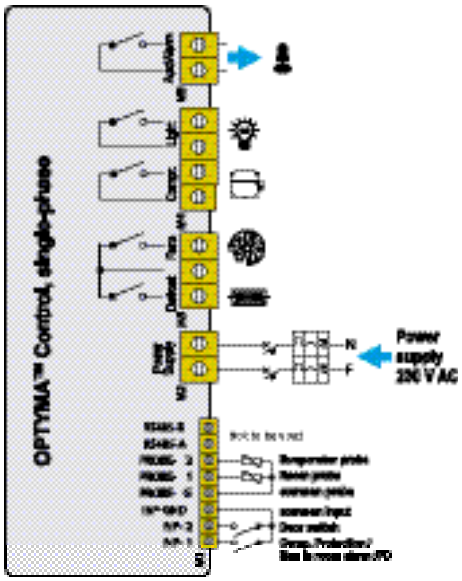

Technical data and ordering

Optyma™ Control AK-RC 103, three-phase

	Optyma™ Control AK-RC 103, three-phase (3 kW)	Optyma™ Control AK-RC 103, three-phase (5 kW)
Case dimensions	400 × 300 x 135 mm	400 × 300 x 135 mm
Protection rating	IP65	IP65
Power supply (3F + N + T)	400 V AC ±10% 50/60Hz	400 V AC ±10% 50/60Hz
Load type	three-phase	three-phase
Operating temperature	-5 to +40°C	-5 to +40°C
Storage temperature	-25 to +55°C	-25 to +55°C
Relative ambient humidity	< 90% RH	< 90% RH
Main switch / general protection	4 poles magnetothermic 16A	4 poles magnetothermic 25A
Compressor protection	motor circuit breaker	motor circuit breaker
Defrosting	electrical	electrical
Status indicators	LED + display	LED + display
Alarm signals	LED + buzzer	LED + buzzer

Ambient probe	NTC 10K 1%	NTC 10K 1%
Evaporator probe	NTC 10K 1%	NTC 10K 1%
Door switch	present	present
High/low pressure switch	present	present
Kriwan® connection	present	present
Compressor functioning mode selection	pump-down / thermostat	pump-down / thermostat

Compressor	370 W to 3000 W	3000 W to 5500 W
Condenser fans output 1	800 W (1ph)	800 W (1ph)
Condenser fans output 2 (separated)		total (1ph)
Evaporator fans	500 W (1ph)	2000 W (1ph / 3ph)
Defrosting heaters	6000 W	9000 W
Room light	800 W (AC1) resistive load	800 W (AC1) resistive load
Solenoid valve	present	present
Compressor oil heater	present	present
Alarm relay	100 W	100 W

Ordering

AK-RC 103	Code no.
OPYTMA™ Control, three-phase (3 kW) 4.5-6.3 A	080Z3201
OPYTMA™ Control, three-phase (3 kW) 7-10 A	080Z3202
OPYTMA™ Control, three-phase (5 kW) 11-16 A	080Z3206
OPYTMA™ Control, three-phase (5 kW) 14-20 A	080Z3207

Connection diagrams

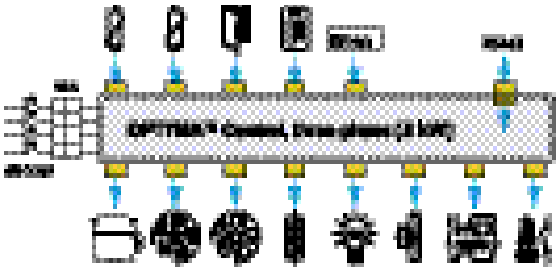

Optyma™ Control, three-phase (3 kW)

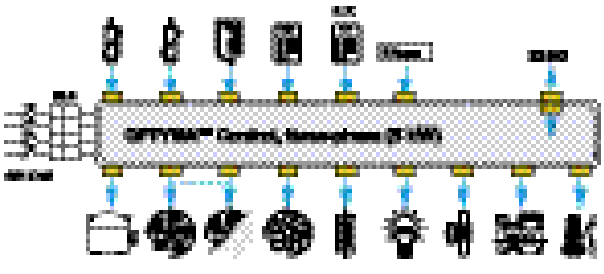

Optyma™ Control, three-phase (5 kW)

Notes

Notes

Optyma Plus™ – the low noise condensing units for quick installation

Optyma Plus™ is a unique integral Danfoss condensing unit built around Danfoss components. In designing the range Danfoss combined the very best design knowledge to create a fully factory built condensing unit ready for quick installation and quiet operation.

Optyma Plus with reciprocating compressors

Optyma Plus with scroll compressors

Product advantages	Customer benefits	Customer benefits
· Energy efficient · Low energy consumption · Fully weatherproof housing made from epoxy powder coated steel · Electrical box : IP54 · Low noise level · Small dimensions · One range with 2 compressor technologies · Common Danfoss stocked components · Multi-refrigerant capability on most of the units · One compressor on high capacity moduls · Packaging is optimised for stacking · Fully synchronized and factory tested	Installer benefits: · An integrated Danfoss design · Easy maintenance: just remove the panels and you have easy access to the components · Outstanding performance even in the toughest applications · A minimum size footprint enabling installation in small spaces without compromising the units' performance or service accessibility · Common Danfoss components all stocked locally by wholesalers · Sightglass visible from outside · Plug & Play installation	End-user benefits: · Low noise operation · Modern practical design with a neutral colour to fit in with its surroundings · Strong weather resistant housing with lasting durability even in the harshest environments · Reliable high ambient operation and proven reliability in the most demanding applications · Energy saving benefits with fan speed control and selection of energy efficient components

Optyma Plus™ R404A/R507 LBP *Reciprocating*

Capacity range from 770 W - 11 400 W at -25 °C evap. temp.

	Test conditons	Type	Code number	Voltage/~ (50 Hz)		HP	Condenser coil			Condenser fan	Ambient °C	Capacity in [W] at evaporating temperature [°C]		
				Com-pressor	Fan		Type	Airflow [m³/h]	Int. volume [L]	Fan blade [mm]		-45	-40	-35
	SH 10K	OP-LPHC018 SCP00G	114X3108	230 V/1~	230 V/1~	¾	A6	1 500	1.6	1×356	27	276	384	516
											32	239	338	459
											38	189	280	389
											43			331
		OP-LPHC026 GSP00G	114X3116	230 V/1~	230 V/1~	1	A6	1 500	1.6	1×356	27	390	550	741
											32	328	473	650
											38	255	386	545
											43			461
		OP-LPHC048 NTP00G	114X3224	230 V/1~	230 V/1~	2 ½	C6	3 000	1.1	1×406	27	485	769	1 109
											32	396	659	971
											38	290	528	808
											43		422	675
		OP-LPHC048 NTP00E	114X3232	400 V/3~	230 V/1~	2 ½	C6	3 000	1.1	1×406	27	485	769	1 109
											32	396	659	971
											38	290	528	808
											43		422	675
		OP-LPHC068 NTP00G	114X3240	230 V/1~	230 V/1~	3 ½	D6	2 600	2.2	1×406	27	969	1 400	1 911
											32	815	1 212	1 681
											38	650	1 007	1 428
											43		852	1 232
		OP-LPHC068 NTP00E	114X3248	400 V/3~	230 V/1~	3 ½	D6	2 600	2.2	1×406	27	969	1 400	1 911
											32	815	1 212	1 681
											38	650	1 007	1 428
											43		852	1 232
		OP-LPHC096 NTP00E	114X3356	400 V/3~	230 V/1~	5	F6	6 100	3.4	1×609	27	1 223	1 792	2 388
											32		1 483	2 099
											38		1 194	1 742
											43		957	1 445
		OP-LPHC136 NTP00E	114X3364	400 V/3~	230 V/1~	7	F6	6 100	3.4	1×609	27	1 847	2 611	3 550
											32		2 275	3 143
											38		1 881	2 660
											43		1 562	2 266
		OP-LPHC271 NTP00E	114X3480	400 V/3~	230 V/1~	13 ½	J6	12 200	6.9	2×609	27	3 900	5 530	7 517
											32	3 370	4 894	6 736
											38	2 721	4 107	5 767
											43		3 447	4 946

Test condition **Superheat 10K**
EN 13215
Subcooling within the limits of the condensing unit

Electrical code
E Compressor 400 V/3 phase/50 Hz, fan 230 V/1 phase/50 Hz
G Compressor 230 V/1 phase/50 Hz, fan 230 V/1 phase/50 Hz

Capacity in [W] at evaporating temperature [°C]					RGT 20 -35 °C EN 13215 (ref. point)	Receiver volume [L]	Dimensions [mm]				Connection (Inch)		Weight	Sound power level dB(A)	Sound pressure level 10 m dB(A)	Com-pressor
-30	-25	-20	-15	-10			Housing	Height H	Width W	Depth D	Suction line	Liquid line	Gross/Net [kg]			
671	854	1 068	1 312	1 591		1.2 - 1.4	1	652	906	430	½	⅜	96/64	61	30	SC18CLX
603	774	973	1 202	1 463	510											
521	676	858	1 067	1 307												
452	594	760														
968	1 233	1 536	1 879	2 261		1.2 - 1.4	1	652	906	430	⅝	⅜	102/76	61	30	GS26CLX
859	1 104	1 385	1 702	2 059	725											
733	953	1 207	1 495	1 819												
632	831	1 062														
1 503	1 951	2 445	2 981	3 557		4.2 - 4.6	2	760	1 053	480	⅝	⅜	116/82	72	41	NTZ048
1 331	1 738	2 188	2 675	3 198	1 087											
1 128	1 487	1 883	2 313	2 774												
962	1 282	1 634														
1 503	1 951	2 445	2 981	3 557		4.2 - 4.6	2	760	1 053	480	⅝	⅜	116/82	72	41	NTZ048
1 331	1 738	2 188	2 675	3 198	1 087											
1 128	1 487	1 883	2 313	2 774												
962	1 282	1 634														
2 503	3 177	3 928	4 751	5 640		4.2 - 4.6	2	760	1 053	480	⅝	⅜	118/84	71	39	NTZ068
2 226	2 843	3 534	4 291	5 112	1 884											
1 913	2 464	3 082	3 761	4 499												
1 669	2 165	2 720														
2 503	3 177	3 928	4 751	5 640		4.2 - 4.6	2	760	1 053	480	⅝	⅜	118/84	71	39	NTZ068
2 226	2 843	3 534	4 291	5 112	1 884											
1 913	2 464	3 082	3 761	4 499												
1 669	2 165	2 720														
3 227	4 250	5 469	6 889	8 520		7.0 - 7.6	3	975	1 406	550	⅞	⅜	161/115	73	42	NTZ096
2 872	3 816	4 943	6 261	7 779	2 338											
2 432	3 279	4 293	5 486	6 868												
2 062	2 824	3 744														
4 674	5 988	7 496	9 191	11 068		7.0 - 7.6	3	975	1 406	550	1 ⅛	½	161/115	73	42	NTZ136
4 177	5 387	6 776	8 339	10 073	3 518											
3 586	4 668	5 911	7 318	8 881												
3 100	4 076	5 197														
9 871	12 591	15 685	19 113	22 872		13.6 - 14.0	4	1 794	1 420	650	1 ⅜	¾	329/275	78	47	NTZ271
8 906	11 411	14 254	17 410	20 869	7 544											
7 711	9 949	12 483	15 312	18 416												
6 696	8 710	10 986														

EN 13215
Information point RGT 20
Constant **R**eturn **G**as **T**emperature 20°C
Ambient temperature = +32°c
Subcooling within the limits of the condensing unit

Sound measurement done in accordance with ISO 3743-1 and ISO 3744.
LBP measured according to EN 13215 @ -25°C suction, +32°C ambient, SH 10 K

Optyma Plus™ R404A/R507 MBP *Reciprocating*

Capacity range from 1.500W - 29.100W at +5 °C evap. temp.

	Test conditons	Type	Code number	Voltage/~ (50 Hz)		HP	Condenser coil			Condenser fan	Ambient °C	Capacity in [W] at evaporating temperature [°C]			
				Com-pressor	Fan		Type	Airflow [m³/h]	Int. volume [L]	Fan blade [mm]		-30 °C	-25 °C	-20 °C	-15 °C
	SH 10K	OP-MPHC010 SCP00G	114x4100	230 V/1~	230 V/1~	1/3	A6	1 500	1.6	1x356	27			621	776
											32			565	708
											38			496	626
											43				557
		OP-MPHC012 SCP00G	114X4103	230 V/1~	230 V/1~	1/2	A6	1500	1.6	1x356	27			717	891
											32			653	814
											38			574	720
											43				641
		OP-MPHC018 SCP00G	114X4108	230 V/1~	230 V/1~	5/8	A6	1 500	1.6	1x356	27			1 050	1 294
											32			953	1 181
											38			838	1 045
											43				932
		OP-MPHC026 GSP00G	114X4215	230 V/1~	230 V/1~	1	D6	2 600	2.2	1x406	27				1 977
											32				1 771
											38				1 565
											43				1 395
		OP-MPZC030 MTP00G	114X4216	230 V/1~	230 V/1~	1 1/2	C6	3 000	1.1	1x406	27	645	971	1 367	1 832
											32	561	860	1 223	1 649
											38	465	734	1 056	1 433
											43	389	632	921	1 258
		OP-MPZC030 MTP00E	114X4224	400 V/3~	230 V/1~	1 1/2	C6	3 000	1.1	1x406	27	645	971	1 367	1 832
											32	561	860	1 223	1 649
											38	465	734	1 056	1 433
											43	389	632	921	1 258
		OP-MPHC034 GSP00G	114X4228	230 V/1~	230 V/1~	1 5/8	D6	2 600	2.2	1x406	27				2 463
											32				2 258
											38				2 002
											43				1 784
		OP-MPZC048 MTP00G	114X4232	230 V/1~	230 V/1~	2	D6	2 600	2.2	1x406	27	1 389	1 948	2 604	3 358
											32	1 175	1 698	2 309	3 008
											38	934	1 412	1 966	2 600
											43	746	1 185	1 692	2 269
		OP-MPZC048 MTP00E	114X4240	400 V/3~	230 V/1~	2	D6	2 600	2.2	1x406	27	1 389	1 948	2 604	3 358
											32	1 175	1 698	2 309	3 008
											38	934	1 412	1 966	2 600
											43	746	1 185	1 692	2 269
		OP-MPZC060 MTP00G	114X4248	230 V/1~	230 V/1~	3	D6	2 600	2.2	1x406	27	1 963	2 641	3 426	4 307
											32	1 727	2 360	3 086	3 898
											38	1 446	2 025	2 679	3 407
											43	1 211	1 745	2 341	2 998
		OP-MPZC060 MTP00E	114X4256	400 V/3~	230 V/1~	3	D6	2 600	2.2	1x406	27	1 963	2 641	3 426	4 307
											32	1 727	2 360	3 086	3 898
											38	1 446	2 025	2 679	3 407
											43	1 211	1 745	2 341	2 998
		OP-MPZC086 MTP00E	114X4364	400 V/3~	230 V/1~	4 1/4	F6	6 100	3.4	1x609	27	2 753	3 745	4 937	6 331
											32	2 401	3 316	4 411	5 691
											38	2 010	2 830	3 809	4 954
											43	1 705	2 448	3 330	4 360
		OP-MPZC108 MTP00E	114X4372	400 V/3~	230 V/1~	5 1/4	F6	6 100	3.4	1x609	27	3 441	4615	6 018	7 656
											32	3 008	4 102	5 398	6 905
											38	2 506	3 499	4 667	6 019
											43	2 102	3 008	4 067	5 290
		OP-MPZC136 MTP00E	114X4380	400 V/3~	230 V/1~	7	G6	5 100	5.2	1x609	27	4 692	6 175	7 897	9 855
											32	4 153	5 537	7 131	8 942
											38	3 537	4 796	6 236	7 864
											43	3 043	4 196	5 505	6 975
		OP-MPZC171 MTP00E	114X4488	400 V/3~	230 V/1~	8 1/2	J6	12 200	6.9	2x609	27	5 238	7 183	9 519	12 246
											32	4 641	6 464	8 629	11 145
											38	3 895	5 576	7 542	9 807
											43	3 243	4 811	6 616	8 679
		OP-MPZC215 MTP00E	114X4496	400 V/3~	230 V/1~	10	J6	12 200	6.9	2x609	27	7 078	9 390	12 129	15 303
											32	6 221	8 350	10 869	13 785
											38	5 280	7 183	9 436	12 040
											43	4 561	6 274	8 295	10 640

Test condition **Superheat 10K**
EN 13215
Subcooling within the limits of the condensing unit

Electrical code
E Compressor 400 V/3 phase/50 Hz, fan 230 V/1 phase/50 Hz
G Compressor 230 V/1 phase/50 Hz, fan 230 V/1 phase/50 Hz

= Superheat 15K

Capacity in [W] at evaporating temperature [°C]					Receiver volume [L]	Dimensions [mm]				Connection (Inch)		Weight	Sound power level dB(A)	Sound pressure level 10 m dB(A)	Compressor
-10 °C	-5 °C	0 °C	5 °C	10 °C		Housing	Height H	Width W	Depth D	Suction line	Liquid line	Gross/Net [kg]			
961	1 177	1 425	1 703		1.2 - 1.4	1	652	906	430	3⁄8	3⁄8	96/64	61	30	SC10MLX
879	1 079	1 308	1 566												
780	960	1 167	1 401												
697	861	1 049													
1 098	1 339	1 613	1 922		1.2 - 1.4	1	652	906	430	3⁄8	3⁄8	97/65	61	30	SC12MLX
1 005	1 227	1 481	1 767												
893	1 093	1 322	1 580												
798	980	1 188													
1 580	1 907	2 277	2 691		1.2 - 1.4	1	652	906	430	3⁄8	3⁄8	96/64	61	30	SC18MLX
1 447	1 753	2 100	2 489												
1 287	1 565	1 882	2 240												
1 152	1 406	1 697													
2 389	2 893	3 460	4 090		4.2 - 4.6	2	760	1 53	480	5⁄8	3⁄8	113/81	67	36	GS26MLX
2 183	2 652	3 179	3 766												
1 939	2 364	2 842	3 376												
1 736	2 124	2 561	3 050												
2 365	2 958	3 605	4 299	5 033	4.2 - 4.6	2	760	1 053	480	5⁄8	3⁄8	116/83	72	41	MTZ18
2 135	2 677	3 270	3 908	4 585											
1 863	2 346	2 874	3 445	4 053											
1 642	2 073	2 548													
2 365	2 958	3 605	4 299	5 033	4.2 - 4.6	2	760	1 053	480	5⁄8	3⁄8	116/83	72	41	MTZ18
2 135	2 677	3 270	3 908	4 585											
1 863	2 346	2 874	3 445	4 053											
1 642	2 073	2 548													
2 975	3 551	4 190	4 892		4.2 - 4.6	2	760	1 053	480	5⁄8	3⁄8	114/82	67	36	GS34MLX
2 736	3 270	3 863	4 513												
2 435	2 919	3 453	4 039												
2 179	2 617	3 102	3 633												
4 209	5 149	6 176	7 282	8 459	4.2 - 4.6	2	760	1 053	480	5⁄8	3⁄8	120/86	71	39	MTZ28
3 798	4 672	5 625	6 654	7 751											
3 315	4 106	4 972	7 751	6 910											
2 920	3 644	4 436													
4 209	5 149	6 176	7 282	8 459	4.2 - 4.6	2	760	1 053	480	5⁄8	3⁄8	120/86	71	39	MTZ28
3 798	4 672	5 625	6 654	7 751											
3 315	4 106	4 972	7 751	6 910											
2 920	3 644	4 436													
5 275	6 318	7 422	8 572	9 755	4.2 - 4.6	2	760	1 053	480	5⁄8	3⁄8	125/88	72	40	MTZ36
4 785	5 740	6 749	7 800	8 884											
4 198	5 046	5 942	6 877	7 846											
3 708	4 470	5 272													
5 275	6 318	7 422	8 572	9 755	4.2 - 4.6	2	760	1 053	480	5⁄8	3⁄8	125/88	72	40	MTZ36
4 785	5 740	6 749	7 800	8 884											
4 198	5 046	5 942	6 877	7 846											
3 708	4 470	5 272													
7 929	9 718	11 691	13 836	16 138	7.0 - 7.6	3	975	1 406	550	7⁄8	5⁄8	163/117	74	42	MTZ50
7 158	8 814	10 639	12 626	14 767											
6 267	7 753	9 398	11 201	13 146											
5 544	6 884	8 834													
9 517	11 596	13 877	16 339	18 961	7.0 - 7.6	3	975	1 406	550	7⁄8	5⁄8	163/117	74	42	MTZ64
8 626	10 545	12 654	14 937	17 376											
7 565	9 291	11 192	13 262	15 484											
6 686	8 251	9 984													
12 031	14 413	16 977	19 701	22 559	7.0 - 7.6	3	975	1 406	550	1 1⁄8	5⁄8	168/122	76	45	MTZ80
10 951	13 146	15 516	18 037	20 691											
9 667	11 641	13 775	16 054	18 466											
8 610	10 400	12 337													
15 355	18 838	22 650	26 772	31 667	13.6 - 14.0	4	1 794	1 420	650	1 3⁄8	5⁄8	327/271	78	47	MTZ100
14 003	17 024	20 709	24 499	28 553											
12 371	15 235	18 374	21 782	25 426											
11 000	13 584	16 434													
18 887	22 862	27 204	31 875	36 834	13.6 - 14.0	4	1 794	1 420	650	1 3⁄8	3⁄4	329/275	78	47	MTZ125
17 095	20 773	24 790	29 126	33 744											
15 010	18 316	21 944	25 878	30 088											
13 322	16 314	19 622													

Sound measurement done in accordance with ISO 3743-1 and ISO 3744.
MBP measured according to EN 13215 @ -10°C suction, +32°C ambient, SH 10 K

Optyma Plus™ R404A **MBP** *Scroll*

Capacity range from 7.100W - 26.700W at +5 °C evap. temp.

	Test conditons	Type	Code number	Voltage/~ (50 Hz)		HP	Condenser coil			Condenser fan	Ambient °C	Capacity in [W] at evaporating temperature [°C]			
				Com-pressor	Fan		Type	Airflow [m³/h]	Int. volume [L]	Fan blade [mm]		-20 °C	-15 °C	-10 °C	-5 °C
	SH 10K	OP-MPUC034 MLP00G	114X4260	230 V/1~	230 V/1~	2	D6	2600	2.2	1×406	27	2 464	3 032	3 671	4 385
											32	2 217	2 749	3 343	4 002
											38	1 897	2 386	2 926	3 522
											43	1 608	2 063	2 558	3 102
		OP-MPUC034 MLP00E	114X4263	400 V/3~	230 V/1~	2	D6	2600	2.2	1×406	27	2 464	3 032	3 671	4 385
											32	2 217	2 749	3 343	4 002
											38	1 897	2 386	2 926	3 522
											43	1 608	2 063	2 558	3 102
		OP-MPUC046 MLP00G	114X4280	230 V/1~	230 V/1~	3	D6	2 600	2.2	1×406	27	3 350	4 053	4 837	5 709
											32	3 060	3 709	4 431	5 234
											38	2 689	3 271	3 918	4 636
											43	2 358	2 883	3 465	4 113
		OP-MPUC046 MLP00E	114X4283	400 V/3~	230 V/1~	3	D6	2 600	2.2	1×406	27	3 350	4 053	4 837	5 709
											32	3 060	3 709	4 431	5 234
											38	2 689	3 271	3 918	4 636
											43	2 358	2 883	3 465	4 113
		OP-MPUC068 MLP00E	114X4310	400 V/3~	230 V/1~	4	F6	6 100	3.4	1×609	27	5 253	6 397	7 701	9 169
											32	4 829	5 887	7 094	8 458
											38	4 290	5 241	6 330	7 563
											43	3 814	4 673	5 660	6 782
		OP-MPUC080 MLP00E	114X4323	400 V/3~	230 V/1~	5	F6	6 100	3.4	1×609	27	6 132	7 441	8 920	10 575
											32	5 616	6 826	8 193	9 723
											38	4 960	6 050	7 280	8 658
											43	4 383	5 370	6 483	7 734
		OP-MPUC107 MLP00E	114X4343	400 V/3~	230 V/1~	6 1/2	G6	5 100	5.2	1×609	27	7 928	9 594	11 452	13 520
											32	7 243	8 784	10 498	12 406
											38	6 375	7 761	9 299	11 013
											43	5 612	6 865	8 254	9 804
		OP-MPUC125 MLP00E	114X4413	400 V/3~	230 V/1~	7 1/2	J6	12 200	6.9	2×609	27	9 674	11 981	14 595	17 512
											32	8 669	10 842	13 293	16 019
											38	7 389	9 396	11 647	14 141
											43	6 265	8 129	10 209	12 507
		OP-MPUC162 MLP00E	114X4433	400 V/3~	230 V/1~	10	J6	12 200	6.9	2×609	27	12 902	15 576	18 526	21 795
											32	11 817	14 219	16 871	19 827
											38	10 486	12 524	14 787	17 331
											43	9 363	11 069	12 982	15 160

Test condition **Superheat 10K**
EN 13215
Subcooling within the limits of the condensing unit

Electrical code
E Compressor 400 V/3 phase/50 Hz, fan 230 V/1 phase/50 Hz
G Compressor 230 V/1 phase/50 Hz, fan 230 V/1 phase/50 Hz

Capacity in [W] at evaporating temperature [°C]			Receiver volume [L]	Dimensions [mm]				Connection (Inch)		Weight	Sound power level dB(A)	Sound pressure level 10 m dB(A)	Compressor
0 °C	5 °C	10 °C		Housing	Height H	Width W	Depth D	Suction line	Liquid line	Gross/Net [kg]			
5 175	6 044	6 985	4.6	2	760	1053	480	3⁄4	1⁄2	132/98	69	38	MLZ015
4 731	5 532	6 401											
4 178	4 899	5 683											
3 699	4 335	5 068											
5 175	6 044	6 985	4.6	2	760	1053	480	3⁄4	1⁄2	132/98	69	38	MLZ015
4 731	5 532	6 401											
4 178	4 899	5 683											
3 699	4 335	5 068											
6 671	7 730	8 883	4.6	2	760	1 053	480	3⁄4	1⁄2	132/98	69	38	MLZ021
6 121	7 102	8 175											
5 434	6 321	7 298											
4 835	5 644												
6 671	7 730	8 883	4.6	2	760	1 053	480	3⁄4	1⁄2	132/98	69	38	MLZ021
6 121	7 102	8 175											
5 434	6 321	7 298											
4 835	5 644												
10 805	12 607	14 575	7.6	3	975	1 406	550	7⁄8	5⁄8	198/141	71	40	MLZ030
9 979	11 661	13 507											
8 945	10 480	12 173											
8 047	9 461	11 021											
12407	14 417	16 611	7.6	3	975	1 406	550	7⁄8	5⁄8	196/139	71	40	MLZ038
11 419	13 285	15 329											
10 191	11 889	13 746											
9 129	10 682	12 389											
15 809	18 335	21 089	7.6	3	975	1 406	550	1 1⁄8	5⁄8	204/147	76	45	MLZ048
14 522	16 865	19 429											
12 920	15 043	17 378											
11 536	13 474												
20 721	24 205	27 941	13.6 - 14.0	4	1 794	1 420	650	1 1⁄8	3⁄4	312/242	78	47	MLZ058
19 012	22 259	25 739											
16 875	19 836	23 010											
15 022	17 745	20 663											
25 427	29 433	33 841	13.6 - 14.0	4	1 794	1 420	650	1 3⁄8	3⁄4	313/243	78	47	MLZ076
23 108	26 754	30 791											
20 181	23 381	26 979											
17 633	20 448	23 654											

Receiver with valve on top

Sound measurement done in accordance with ISO 3743-1 and ISO 3744.
MBP measured according to EN 13215 @ -10°C suction, +32°C ambient, SH 10 K

Optyma Plus™ R134a **MBP** *Reciprocating*

Capacity range from 2.700W - 19.700W at +5°C evap. temp.

	Test conditons	Type	Code number	Voltage/~ (50 Hz)		HP	Condenser coil			Condenser fan	Ambient °C	Capacity in [W] at evaporating temperature [°C]			
				Com-pressor	Fan		Type	Airflow [m³/h]	Int. volume [L]	Fan blade Ø [mm]		-15	-10	-5	0
	SH 10K	OP-MPZC030 MTP00G	114X4216	230V/1~	230V/1~	1 1/2	C6	3.000	1.1	1×406	27	996	1 425	1 885	2 403
											32	919	1 285	1 712	2 199
											38	778	1 119	1 513	1 961
											43	677	993	1 356	1 768
		OP-MPZC030 MTP00E	114X4224	400V/3~	230V/1~	1 1/2	C6	3.000	1.1	1×406	27	996	1 425	1 885	2 403
											32	919	1 285	1 712	2 199
											38	778	1 119	1 513	1 961
											43	677	993	1 356	1 768
		OP-MPGC034 GSP00G	114X4112	230V/1~	230V/1~	1 5/8	A6	1.500	1.6	1×356	27	1 347	1 677	2 059	2 493
											32	1 255	1 568	1 930	2 344
											38	1 143	1 436	1 775	2 163
											43	1 048	1 325	1 645	2 011
		OP-MPZC048 MTP00G	114X4232	230V/1~	230V/1~	2	D6	2.600	2.2	1×406	27	1 615	2 214	2 974	3 738
											32	1 518	2 044	2 692	3 469
											38	1 348	1 835	2 433	3 149
											43	1 226	1 675	2 225	2 886
		OP-MPZC048 MTP00E	114X4240	400V/3~	230V/1~	2	D6	2.600	2.2	1×406	27	1 615	2 214	2 974	3 738
											32	1 518	2 044	2 692	3 469
											38	1 348	1 835	2 433	3 149
											43	1 226	1 675	2 225	2 886
		OP-MPZC060 MTP00G	114X4248	230V/1~	230V/1~	3	D6	2.600	2.2	1×406	27	2 597	3 278	4 125	5 097
											32	2 364	3 053	3 858	4 778
											38	2 138	2 783	3 530	4 385
											43	1 954	2 558	3 255	4 049
		OP-MPZC060 MTP00E	114X4256	400V/3~	230V/1~	3	D6	2.600	2.2	1×406	27	2 597	3 278	4 125	5 097
											32	2 364	3 053	3 858	4 778
											38	2 138	2 783	3 530	4 385
											43	1 954	2 558	3 255	4 049
		OP-MPZC086 MTP00E	114X4364	400V/3~	230V/1~	4 1/4	F6	6.100	3.4	1×609	27	3 201	4 411	5 908	7 423
											32	3 021	4 077	5 340	6 822
											38	2 637	3 612	4 776	6 145
											43	2 334	3 248	4 335	5 611
		OP-MPZC108 MTP00E	114X4372	400V/3~	230V/1~	5 1/2	F6	6.100	3.4	1×609	27	3 662	5 216	6 858	8 792
											32	3 411	4 754	6 337	8 165
											38	2 982	4 243	5 723	7 426
											43	2 632	3 827	5 220	6 822
		OP-MPZC136 MTP00E	114X4380	400V/3~	230V/1~	7	G6	5.100	5.2	1×609	27	5 347	7 201	8 998	11 305
											32	4 923	6 509	8 386	10 570
											38	4 402	5 889	7 642	9 677
											43	3 967	5 370	7 018	8 930
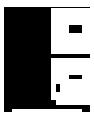		OP-MPZC171 MTP00E	114X4488	400V/3~	230V/1~	8 1/2	J6	12.200	6.9	2×609	27	6 228	8 486	11 253	14 151
											32	5 900	7 908	10 315	13 150
											38	5 180	7 066	9 318	11 961
											43	4 646	6 414	8 521	10 990
		OP-MPZC215 MTP00E	114X4496	400V/3~	230V/1~	10	J6	12.200	6.9	2×609	27	7 987	10 774	13 704	17 156
											32	7 406	9 805	12 641	15 930
											38	6 458	8 721	11 382	14 458
											43	5 721	7 855	10 352	13 234

Test condition **Superheat 10K**
EN 13215
Subcooling within the limits of the condensing unit

Electrical code
E Compressor 400 V/3 phase/50 Hz, fan 230 V/1 phase/50 Hz
G Compressor 230 V/1 phase/50 Hz, fan 230 V/1 phase/50 Hz

Capacity in [W] at evaporating temperature [°C]				Receiver volume [L]	Housing	Dimensions [mm]			Connection (Inch)		Weight	Sound power level dB(A)	Sound pressure level 10 m dB(A)	Compressor
5	10	15	20			Height H	Width W	Depth D	Suction line	Liquid line	Gross/Net [kg]			
2 987	3 632	4 334	5 087	4.2 - 4.6	2	760	1 053	480	5⁄8	3⁄8	116/83	72	41	MTZ18
2 747	3 350	4 006	4 708											
2 462	3 013	3 610	4 249											
2 226	2 732													
2 987	3 632	4 334	5 087	4.2 - 4.6	2	760	1 053	480	5⁄8	3⁄8	116/83	72	41	MTZ18
2 747	3 350	4 006	4 708											
2 462	3 013	3 610	4 249											
2 226	2 732													
2 984				1.2 - 1.4	1	652	906	430	1⁄2	3⁄8	102/76	63	32	GS34MFX
2 811														
2 603														
2 427														
4 704	5 808	7 048	8 413	4.2 - 4.6	2	760	1 053	480	5⁄8	3⁄8	120/86	71	39	MTZ28
4 379	5 419	6 587	7 872											
3 988	4 947	6 023	7 210											
3 660	4 549													
4 704	5 808	7 048	8 413	4.2 - 4.6	2	760	1 053	480	5⁄8	3⁄8	120/86	71	39	MTZ28
4 379	5 419	6 587	7 872											
3 988	4 947	6 023	7 210											
3 660	4 549													
6 195	7 410	8 735	10 158	4.2 - 4.6	2	760	1 053	480	3⁄4	3⁄8	125/88	72	40	MTZ36
5 814	6 958	8 203	9 540											
5 342	6 398	7 546	8 777											
4 937	5 917													
6 195	7 410	8 735	10 158	4.2 - 4.6	2	760	1 053	480	3⁄4	3⁄8	125/88	72	40	MTZ36
5 814	6 958	8 203	9 540											
5 342	6 398	7 546	8 777											
4 937	5 917													
9 242	11 293	13 571	16 072	7.0 - 7.6	3	975	1 406	550	7⁄8	5⁄8	163/117	74	42	MTZ50
8 528	10 466	12 621	14 993											
7 723	9 520	11 528	13 747											
7 086	8 770													
10 975	13 406	16 068	18 942	7.0 - 7.6	3	975	1 406	550	7⁄8	5⁄8	163/117	74	42	MTZ64
10 235	12 535	15 057	17 783											
9 356	11 501	13 855	16 403											
8 635	10 650													
13 930	16 871	20 108	23 625	7.0 - 7.6	3	975	1 406	550	1 1⁄8	5⁄8	168/122	76	45	MTZ80
13 055	15 840	18 909	22 247											
11 993	14 592	17 462	20 588											
11 105	13 546													
17 602	21 539	25 945	30 821	13.6 - 14.0	4	1 794	1 420	650	1 3⁄8	5⁄8	327/271	78	47	MTZ100
16 426	20 159	24 338	28 958											
15 015	18 492	22 385	26 685											
13 843	17 097													
21 113	25 554	30 479	35 854	13.6 - 14.0	4	1 794	1 420	650	1 3⁄8	3⁄4	329/275	78	47	MTZ125
19 688	23 902	28 568	33 662											
17 965	21 893	26 233	30 972											
16 518	20 194													

Sound measurement done in accordance with ISO 3743-1 and ISO 3744.
MBP measured according to EN 13215 @ -10°C suction, +32°C ambient, SH 10 K

Optyma Plus™ R134a **MBP** *Scroll*

Capacity range from 5.200W - 18.900W at +5°C evap. temp.

	Test conditons	Type	Code number	Voltage/~ (50 Hz)		HP	Condenser coil			Condenser fan	Ambient °C		
				Com-pressor	Fan		Type	Airflow [m³/h]	Int. volume [L]	Fan blade [mm]		-15°C	-10°C
	SH 10K	OP-MPUC034 MLP00G	114X4260	230 V/1~	230 V/1~	2	D6	2600	2.2	1×406	27	1 817	2 286
											32	1 716	2 162
											38	1 597	2 013
											43	1 499	1 887
		OP-MPUC034 MLP00E	114X4263	400 V/3~	230 V/1~	2	D6	2600	2.2	1×406	27	1 817	2 286
											32	1 716	2 162
											38	1 597	2 013
											43	1 499	1 887
		OP-MPUC046 MLP00G	114X4280	230 V/1~	230 V/1~	3	D6	2 600	2.2	1×406	27	2 390	2 995
											32	2 244	2 820
											38	2 065	2 604
											43		2 420
		OP-MPUC046 MLP00E	114X4283	400 V/3~	230 V/1~	3	D6	2 600	2.2	1×406	27	2 390	2 995
											32	2 244	2 820
											38	2 065	2 604
											43		2 420
		OP-MPUC068 MLP00E	114X4310	400 V/3~	230 V/1~	4	F6	6 100	3.4	1×609	27	3 607	4 563
											32	3 395	4 305
											38	3 139	3 990
											43	2 926	3 723
		OP-MPUC080 MLP00E	114X4323	400 V/3~	230 V/1~	5	F6	6 100	3.4	1×609	27	4 197	5 317
											32	3 932	5 005
											38	3 609	4 620
											43	3 336	4 294
		OP-MPUC107 MLP00E	114X4343	400 V/3~	230 V/1~	6 1/2	G6	5 100	5.2	1×609	27	5 522	6 956
											32	5 169	6 534
											38	4 742	6 017
											43	4 388	5 579
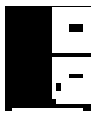		OP-MPUC125 MLP00E	114X4413	400 V/3~	230 V/1~	7 1/2	J6	12 200	6.9	2×609	27	6 778	8 546
											32	6 331	8 035
											38	5 783	7 405
											43	5 318	6 868
		OP-MPUC162 MLP00E	114X4433	400 V/3~	230 V/1~	10	J6	12 200	6.9	2×609	27	8 612	10 867
											32	8 057	10 206
											38	7 400	9 408
											43	6 864	8 742

Test condition **Superheat 10K**
EN 13215
Subcooling within the limits of the condensing unit

Electrical code
E Compressor 400 V/3 phase/50 Hz, fan 230 V/1 phase/50 Hz
G Compressor 230 V/1 phase/50 Hz, fan 230 V/1 phase/50 Hz

-5°C	0°C	5°C	10°C	15°C	Receiver volume [L]	Dimensions [mm] Housing	Height H	Width W	Depth D	Connection (Inch) Suction line	Liquid line	Weight Gross/Net [kg]	Sound power level dB(A)	Sound pressure level 10 m dB(A)	Com-pressor
2 835	3 467	4 189	5 001	5 908	4.6	2	760	1053	480	3⁄4	1⁄2	132/98	69	38	MLZ015
2 686	3 290	3 981	4 762	5 634											
2 503	3 072	3 725	4 464	5 293											
2 347	2 884	3 504	4 208	4 999											
2 835	3 467	4 189	5 001	5 908	4.6	2	760	1053	480	3⁄4	1⁄2	132/98	69	38	MLZ015
2 686	3 290	3 981	4 762	5 634											
2 503	3 072	3 725	4 464	5 293											
2 347	2 884	3 504	4 208	4 999											
3 719	4 564	5 533	6 628	7 851	4.6	2	760	1 053	480	3⁄4	1⁄2	132/98	69	38	MLZ021
3 510	4 318	5 246	6 298	7 474											
3 252	4 014	4 891	5 889	7 008											
3 031	3 752	4 586	5 537	6 607											
3 719	4 564	5 533	6 628	7 851	4.6	2	760	1 053	480	3⁄4	1⁄2	132/98	69	38	MLZ021
3 510	4 318	5 246	6 298	7 474											
3 252	4 014	4 891	5 889	7 008											
3 031	3 752	4 586	5 537	6 607											
5 696	7 017	8 541	10 278	12 239	7.6	3	975	1 406	550	7⁄8	5⁄8	198/141	71	40	MLZ030
5 387	6 653	8 119	9 794	11 689											
5 007	6 205	7 595	9 191	11 005											
4 683	5 819	7 143	8 671	10 413											
6 627	8 146	9 888	11 866	14 091	7.6	3	975	1406	550	7⁄8	5⁄8	196/139	71	40	MLZ038
6 259	7 716	9 388	11 290	13 433											
5 805	7 182	8 768	10 575	12 619											
5 416	6 725	8 235	9 962	11 920											
8 654	10 621	12 855	15 355	18 121	7.6	3	975	1 406	550	1 1⁄8	5⁄8	204/147	76	45	MLZ048
8 159	10 047	12 197	14 609	17 281											
7 545	9 330	11 372	13 670	16 225											
7 019	8 712	10 657	12 855	15 306											
10 609	12 996	15 727	18 834	22 339	13.6 - 14.0	4	1 794	1 420	650	1 1⁄8	3⁄4	312/242	78	47	MLZ058
10 021	12 317	14 947	17 943	21 327											
9 294	11 478	13 982	16 840	20 077											
8 672	10 759	13 159	15 896	19 006											
13 488	16 505	19 939	23 816	28 159	13.6 - 14.0	4	1 794	1 420	650	1 3⁄8	3⁄4	313/243	78	47	MLZ076
12 715	15 615	18 926	22 673	26 884											
11 769	14 514	17 664	21 246	25 286											
10 971	13 573	16 578	20 012	23 901											

Receiver with valve on top

Sound measurement done in accordance with ISO 3743-1 and ISO 3744.
MBP measured according to EN 13215 @ -10°C suction, +32°C ambient, SH 10 K

Optyma Plus™ R407C MBP Reciprocating

Capacity range from 3.600W - 27.100W at +5 °C evap. temp.

	Test conditons	Type	Code number	Voltage/~ (50 Hz)		HP	Condenser coil			Condenser fan	Ambient °C	Capacity in [W] at evaporating temperature [°C]			
				Com-pressor	Fan		Type	Airflow [m³/h]	Int. volume [L]	Fan blade ∅ [mm]		-15	-10	-5	0
	SH 10K	OP-MPZC030 MTP00G	114X4216	230 V/1~	230 V/1~	1 1/2	C6	3 000	1.1	1×406	27	1 479	1 999	2 585	3 232
											32	1 308	1 798	2 351	2 960
											38		1 570	2 083	2 645
											43			1 869	2 393
		OP-MPZC030 MTP00E	114X4224	400 V/3~	230 V/1~	1 1/2	C6	3 000	1.1	1×406	27	1 479	1 999	2 585	3 232
											32	1 308	1 798	2 351	2 960
											38		1 570	2 083	2 645
											43			1 869	2 393
		OP-MPZC048 MTP00G	114X4232	230 V/1~	230 V/1~	2	D6	2 600	2.2	1×406	27	2 534	3 402	4 370	5 425
											32	2 289	3 112	4 023	5 009
											38		2 756	3 603	4 510
											43			3 250	4 093
		OP-MPZC048 MTP00E	114X4240	400 V/3~	230 V/1~	2	D6	2 600	2.2	1×406	27	2 534	3 402	4 370	5 425
											32	2 289	3 112	4 023	5 009
											38		2 756	3 603	4 510
											43			3 250	4 093
		OP-MPZC060 MTP00G	114X4248	230 V/1~	230 V/1~	3	D6	2 600	2.2	1×406	27	3 398	4 375	5 452	6 609
											32	3 058	3 986	5 001	6 087
											38		3 508	4 450	5 453
											43			3 983	4 916
		OP-MPZC060 MTP00E	114X4256	400 V/3~	230 V/1~	3	D6	2 600	2.2	1×406	27	3 398	4 375	5 452	6 609
											32	3 058	3 986	5 001	6 087
											38		3 508	4 450	5 453
											43			3 983	4 916
		OP-MPZC086 MTP00E	114X4364	400 V/3~	230 V/1~	4 1/4	F6	6 100	3.4	1×609	27	5 117	6 471	8 158	10 045
											32	4 544	5 927	7 508	9 274
											38		5 275	6 730	8 353
											43			6 084	7 590
		OP-MPZC108 MTP00E	114X4372	400 V/3~	230 V/1~	5 1/2	F6	6 100	3.4	1×609	27	6 256	7 978	9 935	12 118
											32	5 701	7 315	9 149	11 194
											38		6 541	8 223	10 098
											43			7 470	9 201
		OP-MPZC136 MTP00E	114X4380	400 V/3~	230 V/1~	7	G6	5 100	5.2	1×609	27	7 933	10 125	12 575	15 249
											32	7 271	9 344	11 647	14 152
											38		8 402	10 525	12 824
											43			9 590	11 715
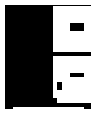		OP-MPZC171 MTP00E	114X4488	400 V/3~	230 V/1~	8 1/2	J6	12 200	6.9	2×609	27	9 705	12 536	15 963	19 809
											32	8 627	11 436	14 657	18 263
											38		10 128	13 095	16 414
											43			11 806	14 885
		OP-MPZC215 MTP00E	114X4496	400 V/3~	230 V/1~	10	J6	12 200	6.9	2×609	27	12 921	16 388	20 274	24 561
											32	11 790	15 068	18 726	22 747
											38		13 472	16 854	20 558
											43			15 294	18 732

Test condition **Superheat 10K**
EN 13215
Subcooling within the limits of the condensing unit

Electrical code
E Compressor 400 V/3 phase/50 Hz, fan 230 V/1 phase/50 Hz
G Compressor 230 V/1 phase/50 Hz, fan 230 V/1 phase/50 Hz

		Receiver volume [L]	Housing	Dimensions [mm]			Connection (Inch)		Weight	Sound power level dB(A)	Sound pressure level 10 m dB(A)	Compressor
5	10			Height H	Width W	Depth D	Suction line	Liquid line	Gross/Net [kg]			
3 933 3 618 3 252	4 678 4 318 3 896	4.2 - 4.6	2	760	1 053	480	5⁄8	3⁄8	116/83	72	41	MTZ18
3 933 3 618 3 252	4 678 4 318 3 896	4.2 - 4.6	2	760	1 053	480	5⁄8	3⁄8	116/83	72	41	MTZ18
6 547 6 055 5 467	7 719 7 144 6 459	4.2 - 4.6	2	760	1 053	480	5⁄8	3⁄8	120/86	71	39	MTZ28
6 547 6 055 5 467	7 719 7 144 6 459	4.2 - 4.6	2	760	1 053	480	5⁄8	3⁄8	120/86	71	39	MTZ28
7 828 7 227 6 500	9 089 8 404 7 576	4.2 - 4.6	2	760	1 053	480	3⁄4	3⁄8	125/88	72	40	MTZ36
7 828 7 227 6 500	9 089 8 404 7 576	4.2 - 4.6	2	760	1 053	480	3⁄4	3⁄8	125/88	72	40	MTZ36
12 125 11 218 10 135	14 376 13 325 12 069	7.0 - 7.6	3	975	1 406	550	7⁄8	5⁄8	163/117	74	42	MTZ50
14 506 13 433 12 155	17 073 15 842 14 371	7.0 - 7.6	3	975	1 406	550	7⁄8	5⁄8	163/117	74	42	MTZ64
18 114 16 827 15 270	21 130 19 636 17 833	7.0 - 7.6	3	975	1 406	550	1 1⁄8	5⁄8	168/122	76	45	MTZ80
24 053 22 243 20 071	28 657 26 562 24 044	13.6 - 14.0	4	1 794	1 420	650	1 3⁄8	5⁄8	327/271	78	47	MTZ100
29 198 27 095 24 554	34 150 31 725 28 806	13.6 - 14.0	4	1 794	1 420	650	1 3⁄8	3⁄4	329/275	78	47	MTZ125

Sound measurement done in accordance with ISO 3743-1 and ISO 3744.
MBP measured according to EN 13215 @ -10°C suction, +32°C ambient, SH 10 K

Optyma Plus™ – LBP – R404A/R507 *Reciprocating*

Electrical characteristics – 230 V, 1 phase

Unit	Wiring diagram	LRA Compressor [A]	MCC Compressor [A]	Max. continuous power consumption [kW]	Contactor	Code number[1] 230 V 50 Hz	Main switch	Code number[1]	MCC fan [A]	Fan power [W]
OP-LPHC018	WD1	23.5	5.3	0.98	CI 9 DILM9-01	037H002131 Moeller	CTI25M PKZM0-10	047B3149 Moeller	0.32	1×25
OP-LPHC026	WD2	25.7	5.4	1.36						
OP-LPHC048	WD2	37	11	2.09	CI 12 DILM12-01	037H003131 Moeller	CTI25MB PKZM0-16	047B3150 Moeller	0.63	1×75
OP-LPHC068	WD2	53	17	3.51	CI 15 DILM15-01	037H004931 Moeller	CTI25MB PKZM0-20	047B3151 Moeller		

Electrical characteristics – 400 V, 3 phase

Unit	Wiring diagram	LRA Compressor [A]	MCC Compressor [A]	Max. continuous power consumption [kW]	Contactor	Code number[1] 230 V 50 Hz	Main switch	Code number[1]	MCC fan [A]	Fan power [W]
OP-LPHC048	WD3	16	4.8	2.17	CI 6 DILM7-01	037H001531 Moeller	CTI25M PKZM0-6.3	047B3148 Moeller	0.63	1×75
OP-LPHC068	WD3	25	8.4	3.46	CI 9 DILM9-01	037H002131 Moeller	CTI25M PKZM0-16	047B3150 Moeller		
OP-LPHC096	WD3	32	10.1	4.32	CI 12 DILM12-01	037H003131 Moeller	CTI25MB PKZM0-10	047B3149 Moeller	1.1	1×130
OP-LPHC136	WD3	51	14.3	6.65			CTI25MB PKZM0-16	047B3150 Moeller		
OP-LPHC271	WD3	96	27	12,41	CI 30 DILM25-01	037H005531 Moeller	CTI25MB PKZM0-25	047B3152 Moeller	2×1.1	2×130

Spare parts (automatic controls)

Unit	Filter drier		Sight glass		Pressure switch		Suction valve		Liquid valve		Fan Speed controller	
OP-LPHC018	DML82.5s DML083	023Z4568 023Z5040	SGN10s SGN+10s	014-0182 014F0182	KP17 WB	060-5397	GBC12s	009G7052	GBC10s	009G7051	RGE-Z1L4-7DS XGE-4CB1	061H3045 061H3142
OP-LPHC026							GBC16s	009G7053				
OP-LPHC048												
OP-LPHC068												
OP-LPHC096	DML162.5s DML163	023Z4576 023Z5043					GBC22s	009G7055				
OP-LPHC136	DML164s DML164	023Z4580 023Z5044	SGN12s SGN+12s	014-0183 014F0183			GBC28s	009G7056	GBC12s	009G7052		
OP-LPHC271	DML166s DML166	023Z4582 023Z5046	SGN19s SGN+19s	014-0185 014F0185			GBC35s	009G7057	GBC18s	009G7054		

Spare parts (components)

Unit Platform		Receiver volume [L]		Fan Motor (capacitor included)		Fan Blade		Fan Grill		Fan capacitor [µF]		Handling handle
OP-LPHC018	SC	1.2	118U0003	Fan motor 25 W	118U0016	Blade ∅14"	118U0017	Grill H1	118U0018	1.8	118U0019	118U0013
OP-LPHC026	GS											
OP-LPHC048	NT	4.2	118U0004	Fan motor 75 W	118U0007	Blade ∅16"	118U0009	Grill H2	118U0011	3.5	118U0014	
OP-LPHC068	NT											
OP-LPHC096	NT	7.0	118U0005	Fan motor 130 W	118U0008	Blade ∅24"	118U0010	Grill H3	118U0012	6.0	118U0015	
OP-LPHC136	NT											
OP-LPHC271	NT	14.0	118U0006					Grill H4				

Note:
LRA (Locked Rotor Amps)
MCC (Maximum Continuous Current)

[1]) Moeller spare parts or individual electrical components are not supplied by Danfoss

Notes

Optyma Plus™ – MBP – R404A/R507 *Reciprocating*

Electrical characteristics – 230 V, 1 phase

Unit	Wiring diagram	LRA Compressor [A]	MCC Compressor [A]	Max. continuous power consumption [kW]	Contactor	Code number[1] 230 V 50 Hz	Main switch	Code number [1]	MCC fan [A]	Fan power [W]
OP-MPHC010	WD1	18.4	4.8	0.65	CI 6 DILM7-01	037H001531 Moeller	CTI25M PKZM0-6,3	047B3148 Moeller	0.32	1×25
OP-MPHC012	WD1	23.4	5.7	0.78						
OP-MPHC018	WD2	23.4	6.1	1.13	CI 9 DILM9-01	037H002131 Moeller	CTI25M PkZM0-10	047B3149 Moeller		
OP-MPHC026	WD2	34.6	8.5	1.58						
OP-MPZC030	WD2	40	10	1.82						
OP-MPHC034	WD2	45.7	12.6	2.32	CI15 DILM15-01	037H004931 Moeller	CTI25MB PKZM0-16	047B3150 Moeller	0.63	1×75
OP-MPZC048	WD2	51	20	3.11	CI 15 DILM15-01	037H004931 Moeller	CTI25MB PKZM0-20	047B3151 Moeller		
OP-MPZC060	WD2	60	22	4.10	CI 20 DILM25-01	037H004531 Moeller	CTI25MB PKZM0-25	047B3152 Moeller		

Electrical characteristics – 400 V, 3 phase

Unit	Wiring diagram	LRA Compressor [A]	MCC Compressor [A]	Max. continuous power consumption [kW]	Contactor	Code number[1] 230 V 50 Hz	Main switch	Code number[1]	MCC fan [A]	Fan power [W]
OP-MPZC030	WD3	20	5	1.82	CI 6 DILM7-01	037H001531 Moeller	CTI25M PKZM0-6,3	047B3148 Moeller	0.63	1×75
OP-MPZC048	WD3	23	7.5	3.11	CI 9 DILM9-01	037H002131 Moeller	CTI25M PKZM0-10	047B3149 Moeller		
OP-MPZC060	WD3	30	9.0	4.10						
OP-MPZC086	WD3	48.5	11.5	4.89	CI 12 DILM12-01	037H003131 Moeller	CTI25MB PKZM0-16	047B3150 Moeller	1.1	1×130
OP-MPZC108	WD3	64	15	7.09	CI 16 DILM15-01	037H004131 Moeller				
OP-MPZC136	WD3	80	19	8.68			CTI25MB PKZM0-20	047B3151 Moeller		
OP-MPZC171	WD3	90	22	10.10	CI 25 DILM25-01	037H005131 Moeller			2×1.1	2×130
OP-MPZC215	WD3	105	27	13.20	CI 30 DILM32-01	037H005531 Moeller	CTI25MB PKZM0-25	047B3152 Moeller		

[1]) Moeller spare parts or individual electrical components are not supplied by Danfoss

Optyma Plus™ – MBP – R404A/R507 *Reciprocating*

Spare parts (automatic controls)

Unit	Filter drier		Sight glass		Pressure switch		Suction valve		Liquid valve		Fan Speed controller	
OP-MPHC010	DML082.5 DML083	023Z4568 023Z5040	SGN10s SGN+10s	014-0182 014F0182	KP17 WB	060-5393	GBC10s	009G7051	GBC10s	009G7051	RGE-Z1L4-7DS XGE-4CB1	061H3045 061H3142
OP-MPHC012												
OP-MPHC018												
OP-MPHC026							GBC16s	009G7053				
OP-MPZC030												
OP-MPHC034												
OP-MPZC048												
OP-MPZC060	DML083s DML083	023Z4570 023Z5040					GBC18s	009G7054				
OP-MPZC086	DML165s DML165	023Z4581 023Z5045	SGN16s SGN+16s	014-0184 014F0184			GBC22s	009G7055	GBC16s	009G7053		
OP-MPZC108												
OP-MPZC136							GBC28s	009G7056				
OP-MPZC171							GBC35s	009G7057				
OP-MPZC215	DML166s DML166	023Z4582 023Z5046	SGN19s SGN+19s	014-0185 014F0184					GBC18s	009G7054		

Spare parts (components)

Unit	Receiver volume [L]		Fan Motor (capacitor included)		Fan Blade		Fan Grill		Fan capacitor [µF]		Handling handle
OP-MPHC010	1.4	118U0003	Fan motor 25 W	118U0016	Blade ∅14"	118U0017	Grill H1	118U0018	1.8	118U0019	118U0013
OP-MPHC012											
OP-MPHC018											
OP-MPHC026	4.6	118U0004	Fan motor 75 W	118U0007	Blade ∅16"	118U0009	Grill H2	118U0011	3.5	118U0014	
OP-MPZC030											
OP-MPHC034											
OP-MPZC048											
OP-MPZC060											
OP-MPZC086	7.6	118U0005	Fan motor 130 W	118U0008	Blade ∅24"	118U0010	Grill H3	118U0012	6.0	118U0015	
OP-MPZC108											
OP-MPZC136											
OP-MPZC171	13.6	118U0006					Grill H4				
OP-MPZC215											

Optyma Plus™ – MBP – R404A/R507 *Scroll*

Electrical characteristics – 230 V, 1 phase

Unit	Wiring diagram	LRA Compressor [A]	MCC Compressor [A]	Max. continuous power consumption [kW]	Contactor	Code number[1] 230 V 50 Hz	Main switch	Code number[1]	MCC fan [A]	Fan power [W]
OP-MPUC034	WD4	60	19	2.5	DILM15-01	Moeller	PKZM0-20	Moeller	0.63	1x75
OP-MPUC046	WD4	97	25	4.5	DILM25-01		PKZM0-32			

Electrical characteristics – 400 V, 3 phase

Unit	Wiring diagram	LRA Compressor [A]	MCC Compressor [A]	Max. continuous power consumption [kW]	Contactor	Code number[1] 230 V 50 Hz	Main switch	Code number[1]	MCC fan [A]	Fan power [W]
OP-MPUC034	WD3	30	7	2.5	DILM04-01	Moeller	PKZM0-10	Moeller	0.63	1x75
OP-MPUC046	WD3	45	9.5	4.3	DILM09-01		PKZM0-16			
OP-MPUC068	WD3	60	13.0	5.9	DILM12-01				1.1	1x130
OP-MPUC080	WD3	70	15.0	7.4			PKZM0-20			
OP-MPUC107	WD3	87	16.0	10.0	DILM15-01					
OP-MPUC125	WD3	95	20.0	11.1	DILM17-01		PKZM0-25		2x1.1	2x130
OP-MPUC162	WD3	140	25.0	13.7	DILM25-01		PKZM0-32			

Spare parts (automatic controls)

Unit	Filter drier		Sight glass		Pressure switch		Suction valve		Liquid valve		Fan Speed controller	
OP-MPUC034	DML084	023Z5041	SGN+12S	014F0183	KP17WB	060-5393	GBC 18s	009G7054	GBC 12s	009G7052	XGE-4CB1	061H3142
OP-MPUC046												
OP-MPUC068	DML165	023Z5045	SGN+16S	014F0184			GBC 22s	009G7055	GBC 16s	009G7053		
OP-MPUC080												
OP-MPUC107							GBC 28s	009G7056				
OP-MPUC125	DML166	023Z5046	SGN+19S	014F0185					GBC 18s	009G7054		
OP-MPUC162							GBC 35s	009G7057				

Spare parts (components)

Unit	Receiver volume [L]		Fan Motor (capacitor included)		Fan Blade		Fan Grill		Fan capacitor [µF]		Handling handle
OP-MPUC034	4.6	118U0004	Fan motor 75W	118U0007	Blade ∅16″	118U0009	Grill H2	118U0011	3.5	118U0014	118U0013
OP-MPUC046											
OP-MPUC068	7.6	118U0005	Fan motor 130W	118U0008	Blade ∅24″	118U0010	Grill H3	118U0012	6	118U0015	
OP-MPUC080											
OP-MPUC107											
OP-MPUC125	13.6	118U0006					Grill H4				
OP-MPUC162											

[1]) Moeller spare parts or individual electrical components are not supplied by Danfoss

Notes

Optyma Plus™ – MBP – R134a *Reciprocating*

Electrical characteristics – 230 V, 1 phase

Unit	Wiring diagram	LRA Compressor [A]	MCC Compressor [A]	Max. continuous power consumption [kW]	Contactor	Code number[1] 230 V 50 Hz	Main switch	Code number[1]	MCC fan [A]	Fan power [W]
OP-MPZC030	WD2	40	10	1.40	CI 9 DILM9-01	037H002131 Moeller	CTI25M PKZM0-10	047B3149 Moeller	0.63	1×75
OP-MPGC034	WD2	25.7	6.8	1.29						
OP-MPZC048	WD2	51	20	2.25	CI 15 DILM15-01	037H004931 Moeller	CTI25MB PKZM0-20	047B3151 Moeller		
OP-MPZC060	WD2	60	22	3.05	CI 20 DILM25-01	037H004531 Moeller	CTI25MB PKZM0-25	047B3152 Moeller		

Electrical characteristics – 400 V, 3 phase

Unit	Wiring diagram	LRA Compressor [A]	MCC Compressor [A]	Max. continuous power consumption [kW]	Contactor	Code number[1] 230 V 50 Hz	Main switch	Code number[1]	MCC fan [A]	Fan power [W]
OP-MPZC030	WD3	20	5	1.40	CI 6 DILM7-01	037H001531 Moeller	CTI25M PKZM0-6.3	047B3148 Moeller	0.63	1x75
OP-MPZC048	WD3	23	7.5	2.25	CI 9 DILM9-01	037H002131 Moeller	CTI25M PKZM0-10	047B3149 Moeller		
OP-MPZC060	WD3	30	9.0	3.05						
OP-MPZC086	WD3	48.5	11.5	3.67	CI 12 DILM12-01	037H003131 Moeller	CTI25MB PKZM0-16	047B3150 Moeller	1.1	1×130
OP-MPZC108	WD3	64	15	4.65	CI 16 DILM15-01	037H004131 Moeller				
OP-MPZC136	WD3	80	19	6.17			CTI25MB PKZM0-20	047B3151 Moeller		
OP-MPZC171	WD3	90	22	7.50	CI25 DILM25-01	037H005131 Moeller			2×1.1	2×130
OP-MPZC215	WD3	105	27	9.03	CI30 DILM32-01	037H005531 Moeller	CTI25MB PKZM0-25	047B3152 Moeller		

[1]) Moeller spare parts or individual electrical components are not supplied by Danfoss

Optyma Plus™ – MBP – R134a *Reciprocating*

Spare parts (automatic controls)

Unit	Filter drier		Sight glass		Pressure switch		Suction valve		Liquid valve		Fan Speed controller	
OP-MPZC030	DML082,5s DML083	023Z4568 023Z5040	SGN10s SGN+10s	014-0182 014F0182	KP17 WB	060-5396	GBC16s	009G7053	GBC10s	009G7051	RGE-Z1L4-7DS XGE-4CB1	061H3045 061H3142
OP-MPGC034												
OP-MPZC048												
OP-MPZC060	DML083s DML83	023Z4570 023Z5040					GBC18s	009G7054				
OP-MPZC086	DML165s DML165	023Z4581 023Z5045	SGN16s SGN+16s	014-0184 014F0184			GBC22s	009G7055	GBC16s	009G7053		
OP-MPZC108												
OP-MPZC136							GBC28s	009G7056				
OP-MPZC171							GBC35s	009G7057				
OP-MPZC215	DML166s DML166	023Z4582 023Z5046	SGN19s SGN+19s	014-0185 014F0185					GBC18s	009G7054		

Spare parts (components)

Unit	Receiver volume [L]		Fan Motor (capacitor included)		Fan Blade		Fan Grill		Fan capacitor [µF]		Handling handle
OP-MPZC030	4.6	118U0004	Fan motor 75 W	118U0007	Blade ∅16"	118U0009	Grill H2	118U0011	3.5	118U0014	118U0013
OP-MPGC034	1.4	118U0003	Fan motor 25 W	118U0016	Blade ∅14″	118U0017	Grill H1	118U0018	1.8	118U0019	
OP-MPZC048	4.6	118U0004	Fan motor 75 W	118U0007	Blade ∅16″	118U0009	Grill H2	118U0011	3.5	118U0014	
OP-MPZC060											
OP-MPZC086	7.6	118U0005	Fan motor 130 W	118U0008	Blade ∅24"	118U0010	Grill H3	118U0012	6.0	118U0015	
OP-MPZC108											
OP-MPZC136											
OP-MPZC171	13.6	118U0006					Grill H4				
OP-MPZC215											

Note:
LRA (Locked Rotor Amps)
MCC (Maximum Continuous Current)

Optyma Plus™ – MBP – R134a *Scroll*

Electrical characteristics – 230 V, 1 phase

Unit	Wiring diagram	LRA Compressor [A]	MCC Compressor [A]	Max. continuous power consumption [kW]	Contactor	Code number[1] 230 V 50 Hz	Main switch	Code number[1]	MCC fan [A]	Fan power [W]
OP-MPUC034	WD4	60	19	1.8	DILM15-01	Moeller	PKZM0-20	Moeller	0.63	1x75
OP-MPUC046	WD4	97	25	2.6	DILM25-01	Moeller	PKZM0-32	Moeller	0.63	1x75

Electrical characteristics – 400 V, 3 phase

Unit	Wiring diagram	LRA Compressor [A]	MCC Compressor [A]	Max. continuous power consumption [kW]	Contactor	Code number[1] 230 V 50 Hz	Main switch	Code number[1]	MCC fan [A]	Fan power [W]
OP-MPUC034	WD3	30	7	1.8	DILM09-01	Moeller	PKZM0-10	Moeller	0.63	1x75
OP-MPUC046	WD3	45	9.5	2.7	DILM09-01	Moeller	PKZM0-16	Moeller	0.63	1x75
OP-MPUC068	WD3	60	13.0	3.7	DILM12-01	Moeller			1.1	1x130
OP-MPUC080	WD3	70	15.0	4.4			PKZM0-20	Moeller		
OP-MPUC107	WD3	87	16.0	5.7	DILM15-01	Moeller				
OP-MPUC125	WD3	95	20.0	6.1	DILM17-01	Moeller	PKZM0-25	Moeller	2x1.1	2x130
OP-MPUC162	WD3	140	25.0	8.2	DILM25-01	Moeller	PKZM0-32	Moeller		

Spare parts (automatic controls)

Unit	Filter drier		Sight glass		Pressure switch		Suction valve		Liquid valve		Fan Speed controller	
OP-MPUC034	DML084	023Z5041	SGN+12s	014F0183	KP17WB	060-5393	GBC 18s	009G7054	GBC 12s	009G7052	XGE-4CB1	061H3142
OP-MPUC046												
OP-MPUC068	DML165	023Z5045	SGN+16s	014F0184			GBC 22s	009G7055	GBC 16s	009G7053		
OP-MPUC080												
OP-MPUC107							GBC 28s	009G7056				
OP-MPUC125	DML166	023Z5046	SGN+19s	014F0185					GBC 18s	009G7054		
OP-MPUC162							GBC 35s	009G7057				

Spare parts (components)

Unit	Receiver volume [L]		Fan Motor (capacitor included)		Fan Blade		Fan Grill		Fan capacitor [µF]		Handling handle
OP-MPUC034	4.6	118U0024	Fan motor 75W	118U0007	Blade ∅16″	118U0009	Grill H2	118U0011	3.5	118U0014	118U0013
OP-MPUC046											
OP-MPUC068	7.6	118U0025	Fan motor 130W	118U0008	Blade ∅24″	118U0010	Grill H3	118U0012	6	118U0015	
OP-MPUC080											
OP-MPUC107											
OP-MPUC125	13.6	118U0026					Grill H4				
OP-MPUC162											

[1]) Moeller spare parts or individual electrical components are not supplied by Danfoss

Notes

Optyma Plus™ – MBP – R407C *Reciprocating*

Electrical characteristics – 230 V, 1 phase

Unit	Wiring diagram	LRA Compressor [A]	MCC Compressor [A]	Max. continuous power consumption [kW]	Contactor	Code number[1] 230 V 50 Hz	Main switch	Code number[1]	MCC fan [A]	Fan power [W]
OP-MPZC030	WD2	40	10	1.75	CI 9 DILM9-01	037H002131 Moeller	CTI25M PKZM0-10	047B3149 Moeller	0.63	1×75
OP-MPZC048	WD2	51	20	3.03	CI 15 DILM15-01	037H004931 Moeller	CTI25MB PKZM0-20	047B3151 Moeller		
OP-MPZC060	WD2	60	22	4.11	CI 20 DILM25-01	037H004531 Moeller	CTI25MB PKZM0-25	047B3152 Moeller		

Electrical characteristics – 400 V, 3 phase

Unit	Wiring diagram	LRA Compressor [A]	MCC Compressor [A]	Max. continuous power consumption [kW]	Contactor	Code number[1] 230 V 50 Hz	Main switch	Code number[1]	MCC fan [A]	Fan power [W]
OP-MPZC030	WD3	20	5	1.75	CI 6 DILM7-01	037H001531 Moeller	CTI25M PKZM0-6.3	047B3148 Moeller	0.63	1×75
OP-MPZC048	WD3	23	7.5	3.03	CI 9 DILM9-01	037H002131 Moeller	CTI25M PKZM0-10	047B3149 Moeller		
OP-MPZC060	WD3	30	9.0	4.11						
OP-MPZC086	WD3	48.5	11.5	5.03	CI 12 DILM12-01	037H003131 Moeller	CTI25MB PKZM0-16	047B3150 Moeller	1.1	1×130
OP-MPZC108	WD3	64	15	6.38	CI 16 DILM15-01	037H004131 Moeller				
OP-MPZC136	WD3	80	19	8.60			CTI25MB PKZM0-20	047B3151 Moeller		
OP-MPZC171	WD3	90	22	10.06	CI 25 DILM25-01	037H005131 Moeller			2×1.1	2×130
OP-MPZC215	WD3	105	27	13.1	CI 30 DILM32-01	037H005531 Moeller	CTI25MB PKZM0-25	047B3152 Moeller		

[1]) Moeller spare parts or individual electrical components are not supplied by Danfoss

Optyma Plus™ – MBP – R407C *Reciprocating*

Spare parts (automatic controls)

Unit	Filter drier		Sight glass		Pressure switch		Suction valve		Liquid valve		Fan Speed controller	
OP-MPZC030	DML082,5s DML083	023Z4568 023Z5040	SGN10s SGN+10s	014-0182 014F0182	KP17 WB	060-5397	GBC16s	009G7053	GBC10s	009G7051	RGE-Z1L4-7DS XGE-4CB1	061H3045 061H3142
OP-MPZC048												
OP-MPZC060	DML083s DML083	023Z4570 023Z5040					GBC18s	009G7054				
OP-MPZC086	DML165s DML165	023Z4581 023Z5045	SGN16s SGN+16s	014-0184 014F0184			GBC22s	009G7055	GBC16s	009G7053		
OP-MPZC108												
OP-MPZC136							GBC28s	009G7056				
OP-MPZC171							GBC35s	009G7057				
OP-MPZC215	DML166s DML166	023Z4582 023Z5046	SGN19s SGN+19s	014-0185 014F0185					GBC18s	009G7054		

Spare parts (components)

Unit	Receiver volume [L]		Fan Motor (capacitor included)		Fan Blade		Fan Grill		Fan capacitor [µF]		Handling handle
OP-MPZC030	4.6	118U0024	Fan motor 75 W	118U0007	Blade ∅16"	118U0009	Grill H2	118U0011	3.5	118U0014	118U0013
OP-MPZC048											
OP-MPZC060											
OP-MPZC086	7.6	118U0025	Fan motor 130 W	118U0008	Blade ∅24"	118U0010	Grill H3	118U0012	6.0	118U0015	
OP-MPZC108											
OP-MPZC136											
OP-MPZC171	13.6	118U0026					Grill H4	118U0012			
OP-MPZC215											

Optyma Plus™ – Designation system for the Optyma Plus™ program

(additional program frequency etc.: please contact your local wholesaler)

1. Application
2. Design
3. Refrigerant
4. Condenser option
5. Displacement
6. Compressor platform
7. Version
8. Electrical code

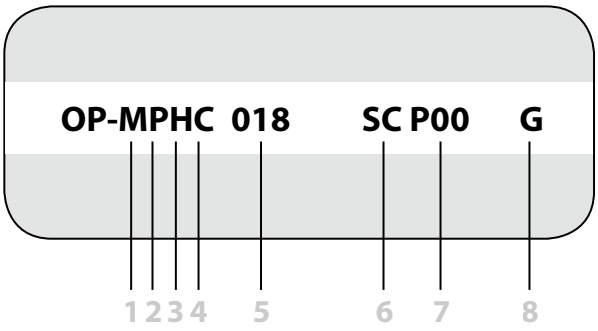

1	L = LBP M = MBP	5	026 = 26 cm^3 171 = 171 cm^3
2	P = Packaged units	6	GS = GS (Reciprocating) MT = MTZ (Reciprocating) NT = NTZ (Reciprocating) SC = SC (Reciprocating) ML= MLZ (Scroll)
3	Z = R404A, R134a, R507, R407C H = R404A/R507 G = R134a U = R404A, R134a, R507, R22	7	P00
4	C = Standard	8	G = Compressor 230 V/1 phase/50 Hz, fan 230 V/1 phase/50 Hz E = Compressor 400 V/3 phase/50 Hz, fan 230 V/1 phase/50 Hz

Optyma Plus™ – Range capacity presentation

@ +32 °C Ambient

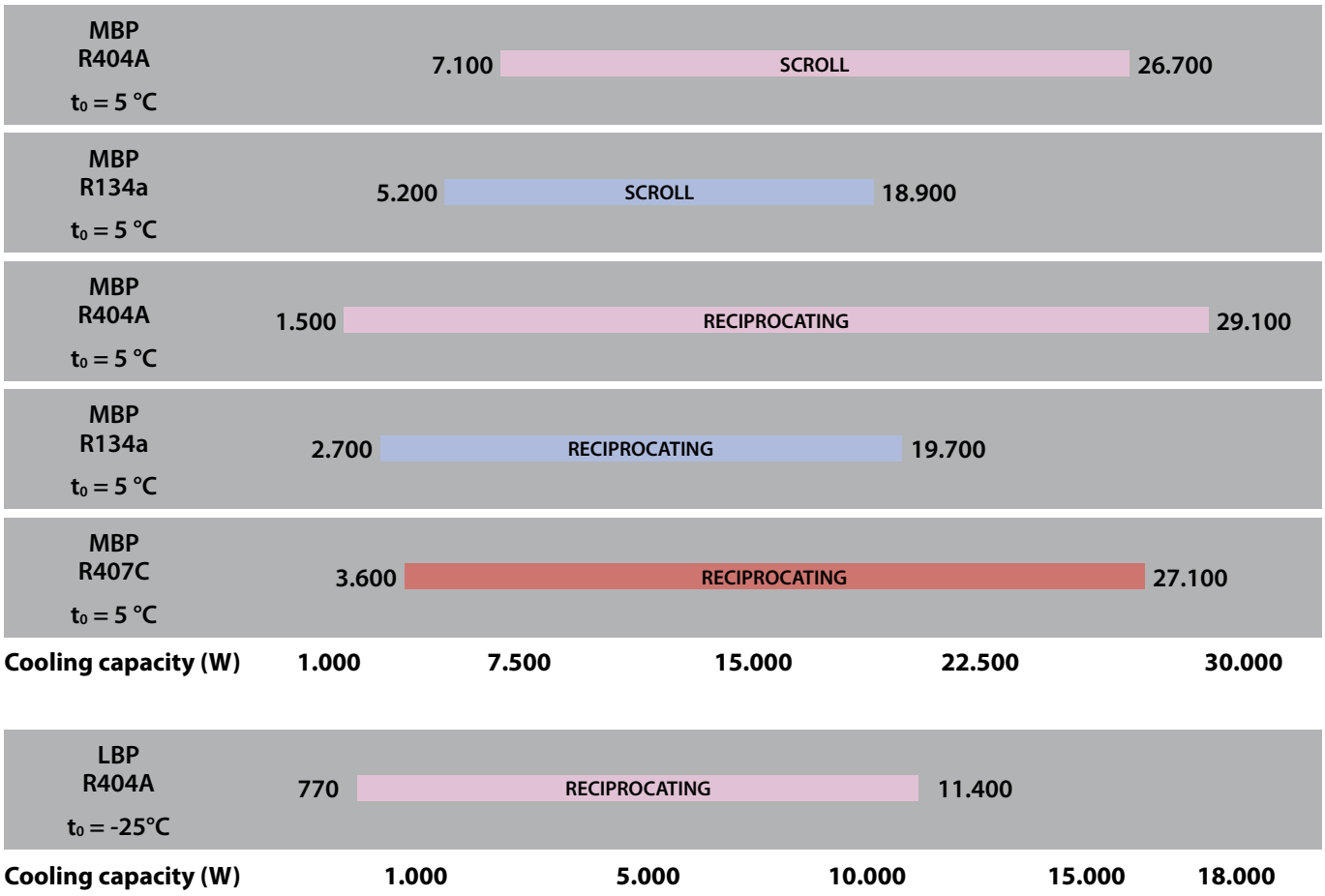

Optyma Plus™ – Dimensions

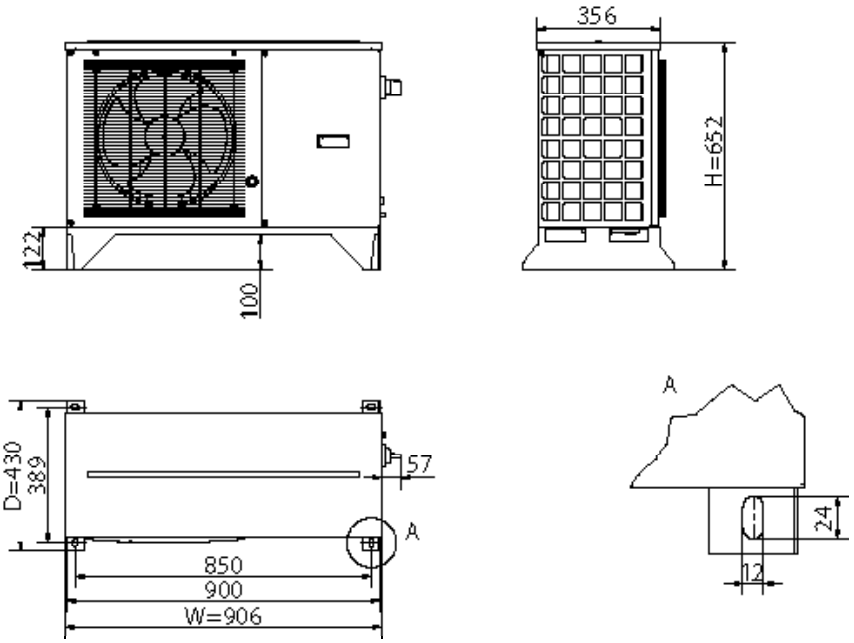

Housing 1

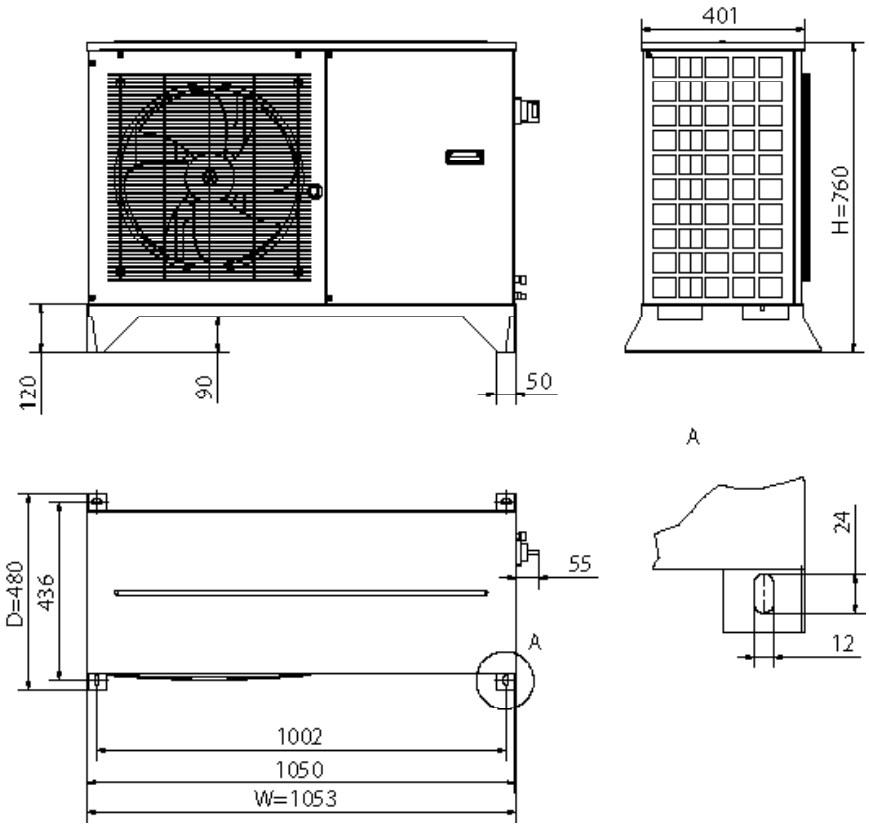

Housing 2

Optyma Plus™ – Dimensions

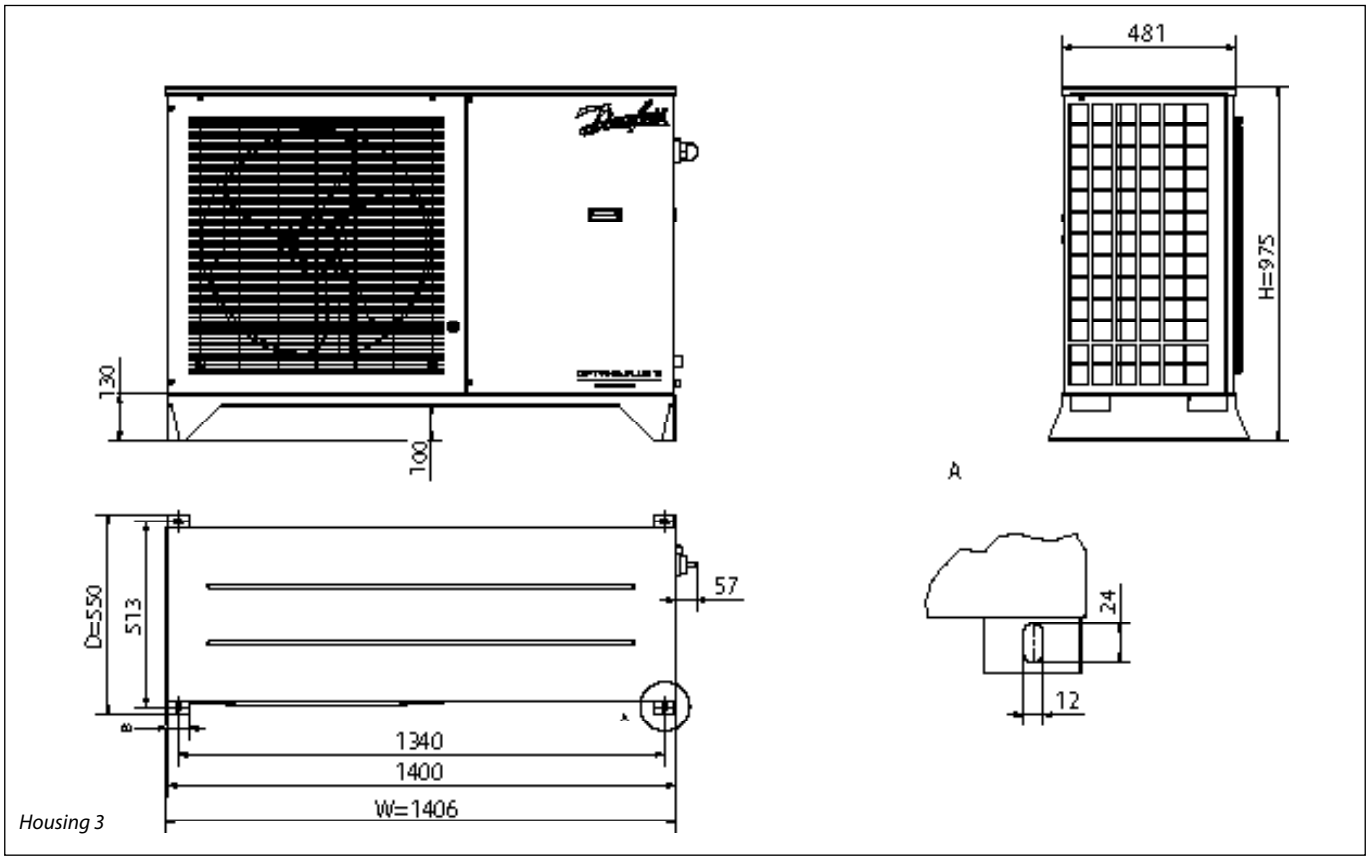

Housing 3

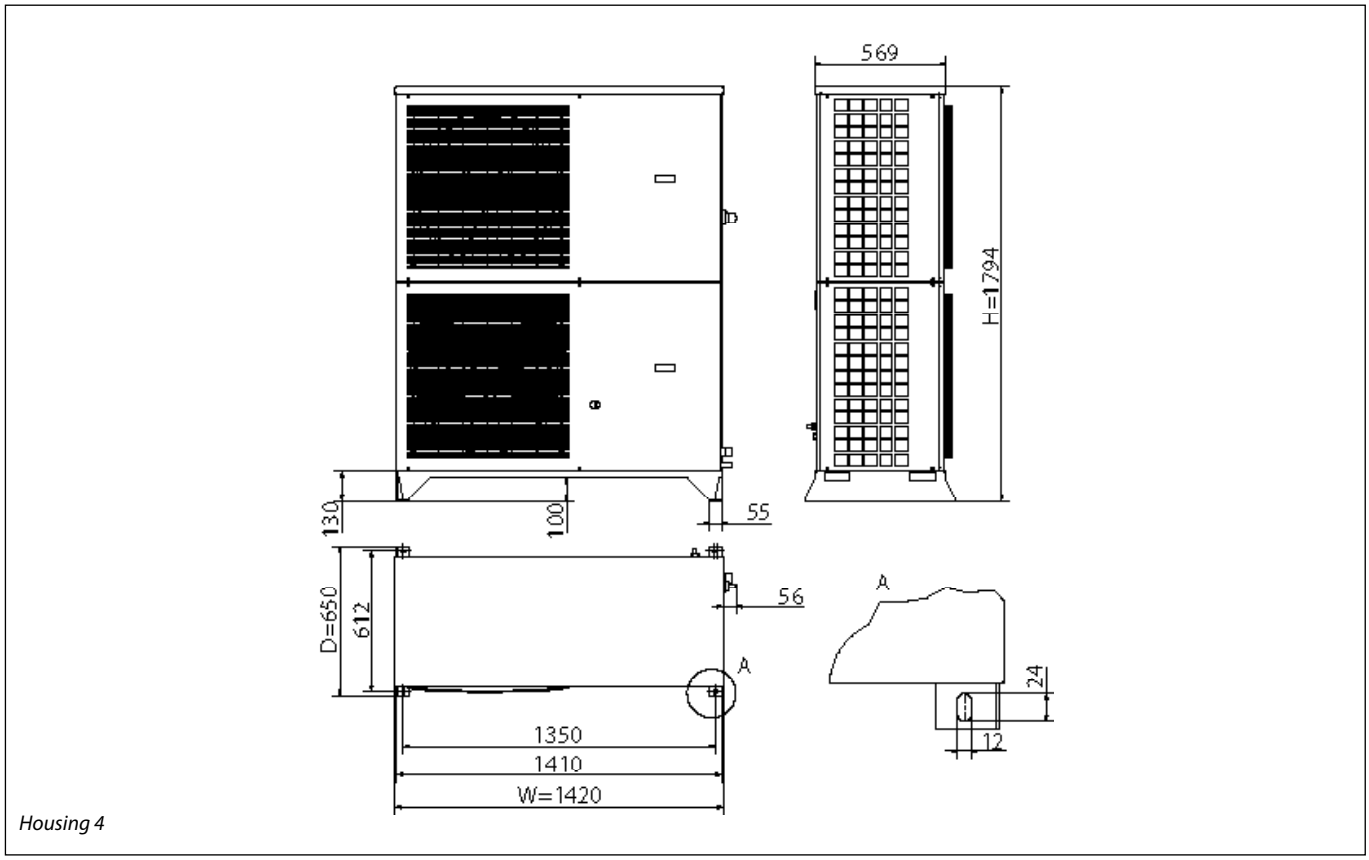

Housing 4

Optyma Plus™ – Electrical wiring diagrams

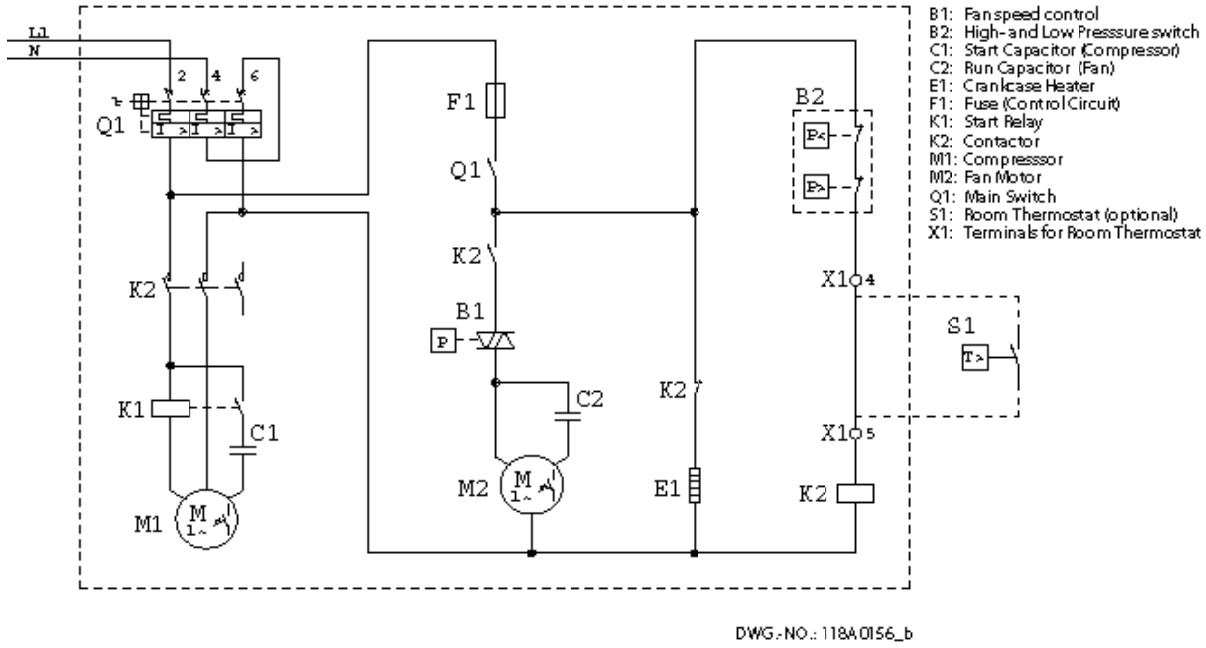

WD1

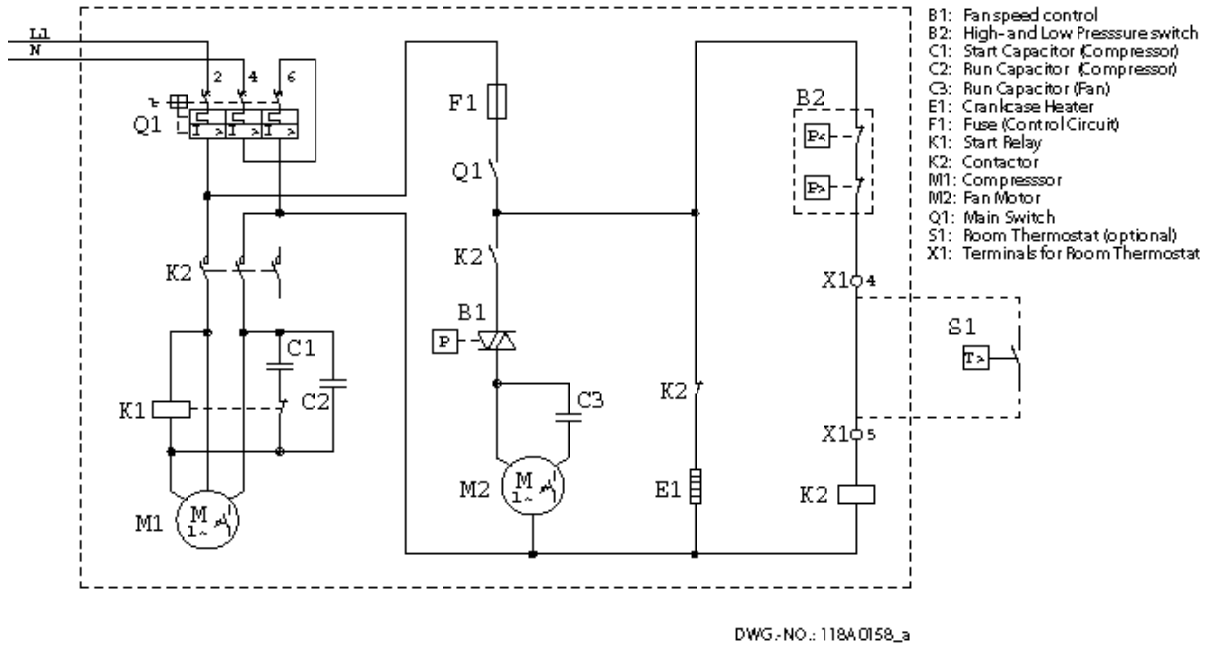

WD2

Optyma Plus™ – Electrical wiring diagrams

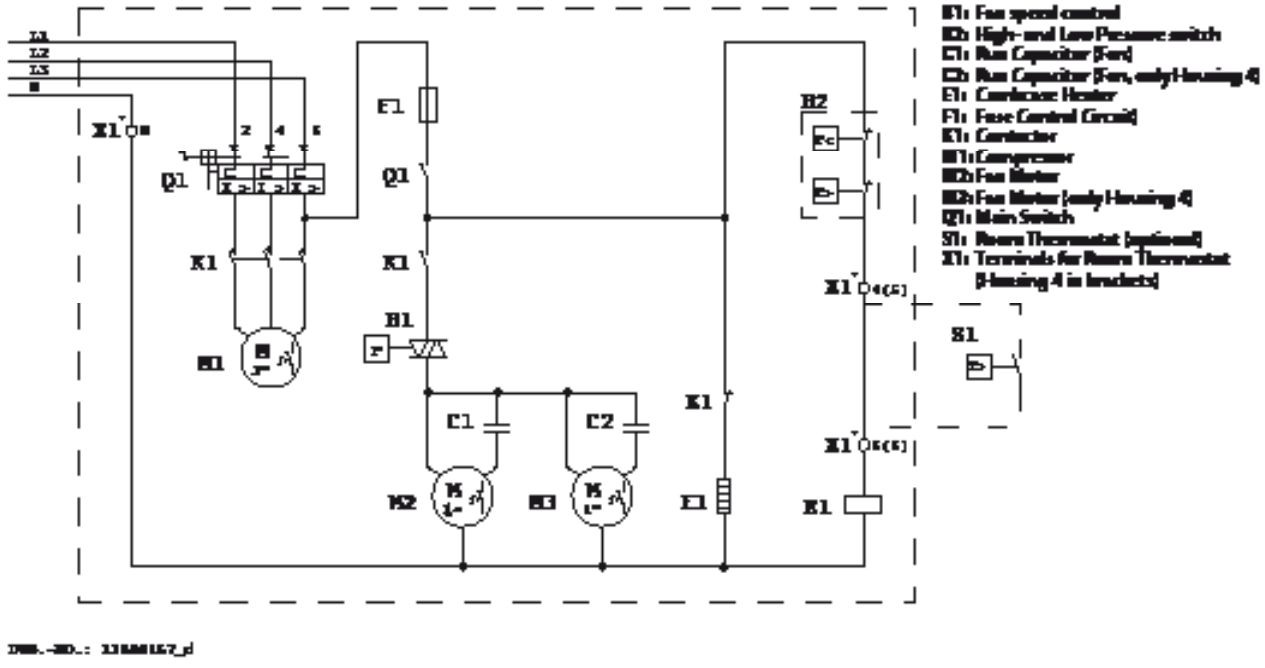

WD3

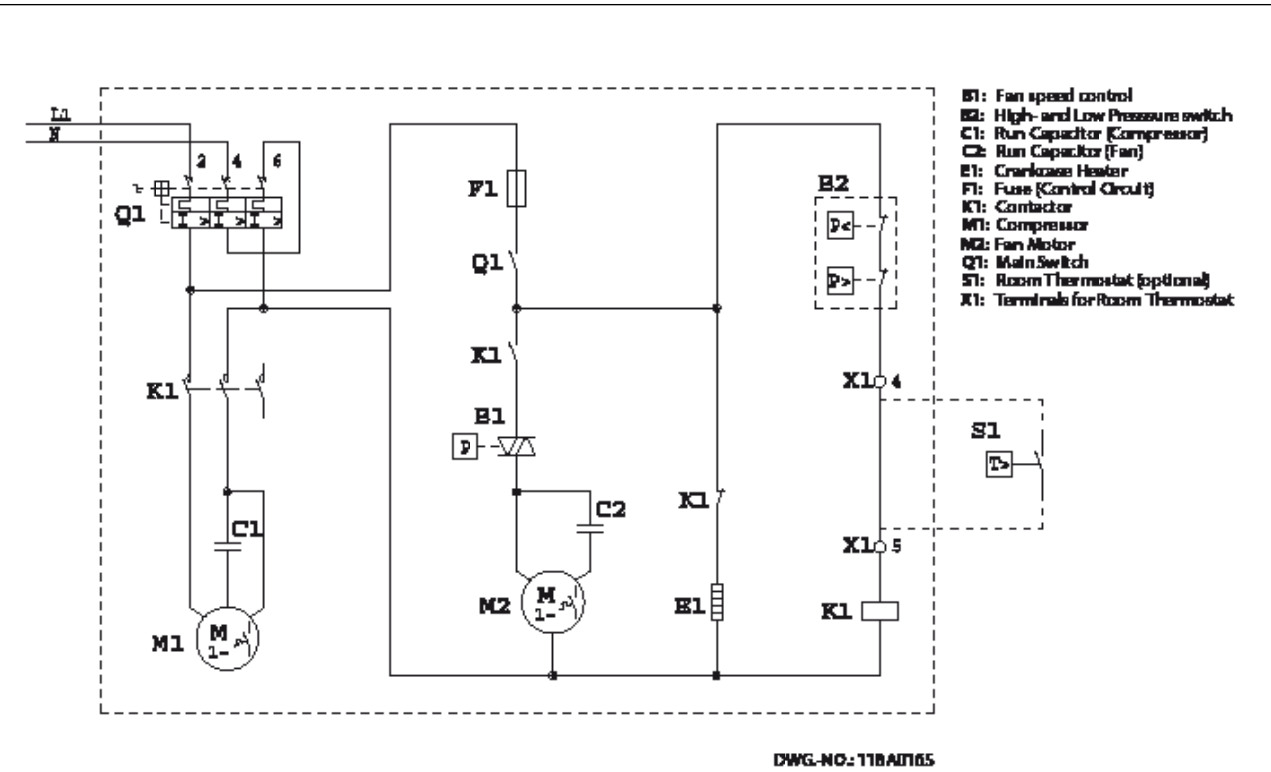

WD4

Optyma Plus™ new generation – the low noise condensing units for quick installation

Optyma Plus™ is a unique integral Danfoss condensing unit built around Danfoss components. In designing the range Danfoss combined the very best design knowledge to create a fully factory built condensing unit ready for quick installation and quiet operation.

Silent and outstanding performance

The Optyma Plus™ new generation can be located even in residential areas. Smart compressor design, acoustic insulation and fan speed reduction during low capacity operation periods make the Optyma Plus™ so smooth and quiet it will not disturb the peace in your local environment.

Effortless installation

Featuring a more compact design, reduced weight and simplified wiring, the Optyma Plus™ new generation Plug & Play unit is among the fastest to install and easiest to service. All parameters are already set up, switch on the power, and the cooling process is up and running!

Increased efficiency and sustainable solutions

With the Optyma Plus™ new generation substantial energy savings can be achieved thanks to the energy efficient components inside such as: micro channel heat exchanger, fan speed and crank case heater control. You are going to reduce the energy consumption significantly and therefore, cut the energy bills.

The highest standard and quality

We provide 100% factory tested units to our customers with a premium quality. We at Danfoss do not accept any compromise regarding reliability of our products. The Optyma Plus™ – new generation includes all the best of our condensing units.

Stock and logistics optimization

Multirefrigerant condensing units with optimized packaging cover a wide variety of applications and reduce your stock. Most of the Danfoss condensing units can be used with R404A/R507, R134a, pick what best fits your application.

Main product features

- Compact design
- Electrical box IP54
- On site stack mounting
- Fully weather resistant
- Micro channel heat exchanger (MCHX)
- Parameter monitoring and control

Capacity range (W)

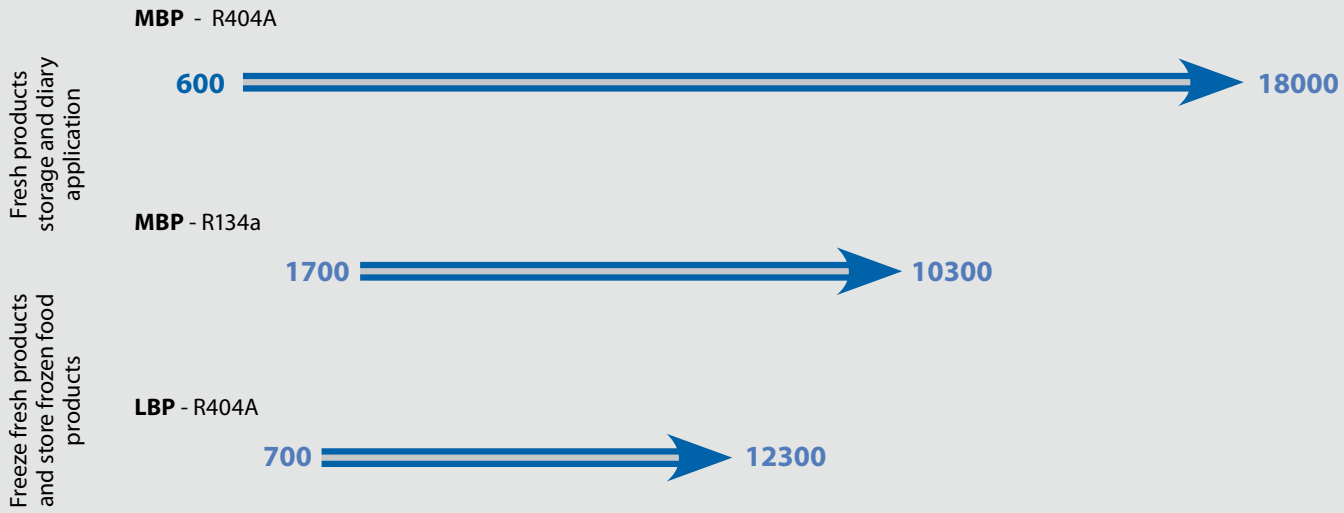

Conditions:	**LBP**	**MBP**
• Ambient temperature:	32 °C	32 °C
• Evaporating temperature:	-25 °C	-10 °C

Optyma Plus™ new generation units can work in the following evaporating temperature range:

- LBP R404A -40°C to -10 °C
- MBP R404A -20°C to +10 °C
- MBP R134a -15°C to +15 °C

Optyma Plus™ new generation – condensing unit R404A/R507 LBP

Fan	Test con-ditions	Unit	Code	Electrical code	Compressor	Amb. temp. °C	Capacity range in [W] at evaporating temperature [°C]							Sound power level dB(A)	Sound pressure level full sphere 10m dB(A)
							-40°C	-35°C	-30°C	-25°C	-20°C	-15°C	-10°C		
	SH 10K	OP-LPHM018	114X3109	G	SC18CLX.2	27°C	330	460	619	810	1037	1304	1617	60	29
						32°C	275	395	540	716	926	1175	1467		
						38°C	209	316	445	603	792	1017	1283		
						43°C		250	366	507	678				
		OP-LPHM026	114X3217	G	GS26CLX	27°C	471	668	909	1200	1547	1956	2434	67	36
						32°C	389	568	788	1053	1371	1747	2189		
						38°C	296	454	646	881	1163	1500	1898		
						43°C		363	534	742	995				
		OP-LPHM048	114X3225	G	NTZ048	27°C	893	1295	1762	2296	2898	3564	4294	69	38
						32°C	788	1161	1595	2090	2645	3258	3929		
			114X3233	E		38°C	654	997	1393	1841	2340	2889	3488		
						43°C	541	860	1224	1633	2086				
		OP-LPHM068	114X3241	G	NTZ068	27°C	1567	2121	2757	3471	4258	5111	6022	70	39
						32°C	1388	1907	2498	3160	3891	4680	5523		
			114X3249	E		38°C	1193	1669	2208	2809	3471	4185	4947		
						43°C	1044	1486	1982	2533	3136				
		OP-LPHM096	114X3357	E	NTZ096	27°C	1901	2643	3542	4630	5916	7406	9101	72	41
						32°C	1695	2373	3215	4232	5435	6830	8419		
						38°C	1410	2028	2797	3727	4827	6107	7569		
						43°C	1167	1732	2435	3289	4304				
		OP-LPHM136	114X3365	E	NTZ136	27°C	2950	3984	5212	6639	8264	10088	12095	73	42
						32°C	2631	3602	4750	6081	7593	9291	11155		
						38°C	2248	3143	4195	5408	6786	8330	10027		
						43°C	1931	2762	3732	4847	6111				
		OP-LPHM215	114X3475	E	NTZ215	27°C	4538	6166	8074	10270	12747	15504	18522	77	46
						32°C	4020	5572	7376	9439	11756	14328	17135		
						38°C	3340	4792	6464	8363	10486	12836	15393		
						43°C	2740	4102	5658	7417	9374	11530	13886		
		OP-LPHM271	114X3481	E	NTZ271	27°C	6076	8167	10599	13362	16415	19736	23285	77	46
						32°C	5492	7460	9729	12287	15117	18177	21443		
						38°C	4753	6566	8637	10952	13501	16251	19179		
						43°C	4115	5794	7694	9806	12122	14615	17262		

Test condition EN13215 **Superheat 10K**
Subcooling within the limits of the condensing unit

Electrical code
E - Compressor 400 V/3 phase/50 Hz, fan 230 V/1 phase/50 Hz
G - Compressor 230 V/1 phase/50 Hz, fan 230 V/1 phase/50 Hz

Sound measurement done in accordance with ISO 9614-1
LBP measuredin accordance to EN 13215@ - 25°C suction, +32°C ambient, SH10K
Units can operate down to -45 evaporating temperature. Refer to dedicated Software or contact Danfoss for more details.
Cooling capacity is given for units with 3-phase compressor. Capacity of single-phase versions is within +/- 1% of this value.

Unit	Condenser coil			Condenser fan	Receiver volume [L]	Power consumption [W] at evap. temp. -25°C	Dimensions						Weight [kg]	
	Type	Air flow [m³/h]	Int. volume [dm³]	Fan blade Ø [mm]			Housing	Height H [mm]	Width W [mm]	Length D [mm]	Suction line	Liquid line	Gross	Net
OP-LPHM018	A7	2200	0.4	1x356	1.3	732	1	652	906	356	3/8"	3/8"	63	51
OP-LPHM026	D7	3700	0.6	1x457	3.4	959	2	815	1055	430	1/2"	3/8"	93	72
OP-LPHM048	D7	3700	0.6	1x457	3.4	1485(1~) 1470(3~)	2	815	1055	430	5/8"	3/8"	95	81
OP-LPHM068	D7	3700	0.6	1x457	3.4	2231(1~) 2184(3~)	2	815	1055	430	5/8"	3/8"	97	83
OP-LPHM096	G7	6700	1.8	1x609	6.2	2764	3	967	1406	481	7/8"	1/2"	135	119
OP-LPHM136	G7	6700	1.8	1x609	6.2	4282	3	967	1406	481	1 1/8"	1/2"	135	119
OP-LPHM215	J7	9500	2.5	2x609	10.0	6878	4	966	1800	600	1 1/8"	3/4"	205	161
OP-LPHM271	J7	9500	2.5	2x609	10.0	8767	4	966	1800	600	1 1/8"	3/4"	207	163

Power consumption referred at 32°C ambient temp.

Optyma Plus™ new generation – condensing unit R404A/R507 MBP

Fan	Test conditions	Unit	Code	Electrical code	Compressor	Amb. temp. °C	Capacity range in [W] at evaporating temperature [°C]							Sound power level dB(A)	Sound pressure level full sphere 10m dB(A)
							-20°C	-15°C	-10°C	-5°C	0°C	+5°C	+10°C		
	SH 10K	OP-MPHM007	114X4101	G	NF 7MLX	27°C		540	676	835	1021	1236		60	29
						32°C		484	610	757	930	1130			
						38°C		416	530	663	820	1001			
						43°C		360	463	584	727	893			
		OP-MPHM010	114X4102	G	SC10MLX	27°C	574	729	917	1141	1405	1713		60	29
						32°C	510	652	824	1029	1270	1552			
						38°C	431	558	711	893	1107	1359			
						43°C		478	614	777	970				
		OP-MPHM012	114X4104	G	SC12MLX	27°C	701	886	1110	1378	1693	2060		60	29
						32°C	624	794	999	1244	1532	1869			
						38°C	530	681	864	1081	1338	1638			
						43°C		585	748	943	1173				
		OP-MPHM015	114X4105	G	SC15MLX	27°C	867	2172	2669	3235	3872	2513		60	29
						32°C	772	1978	2440	2966	3558	2301			
						38°C	660	1748	2167	2644	3182	2040			
						43°C		1559	1941	2376	2868				
		OP-MPHM018	114X4109	G	SC18MLX	27°C	1012	2497	3023	3617	4281	2920		60	29
						32°C	901	2291	2782	3335	3952	2674			
						38°C	772	2033	2480	2980	3538	2371			
						43°C		1813	2220	2675	3181				
		OP-MPHM026	114X4214	G	GS26MLX	27°C		1985	2496	3096	3797	4610		67	36
						32°C		1779	2249	2802	3448	4201			
						38°C		1534	1954	2450	3031	3710			
						43°C		1332	1710	2156	2682				
●		OP-MPHM034	114X4229	G	GS34MLX	27°C		2616	3238	3962	4802	5771		67	36
						32°C		2360	2939	3613	4395	5300			
						38°C		2044	2564	3171	3878	4699			
						43°C		1778	2245	2792	3430	4176			
		OP-MPUM034	114X4261	G	MLZ015	27°C	2731	3323	3979	4702	5488	6339	7250	68	37
						32°C	2501	3059	3669	4338	5064	5845	6682		
			114X4264	E		38°C	2195	2714	3274	3880	4532	5233	5984		
						43°C	1912	2402	2921	3475	4071	4707	5386		
		OP-MPUM046	114X4281	G	MLZ021	27°C	3744	4482	5291	6176	7139	8181	9300	68	37
						32°C	3484	4169	4916	5732	6619	7581	8619		
			114X4284	E		38°C	3145	3766	4439	5170	5966	6833	7774		
						43°C	2840	3407	4016	4677	5399	6188			
		OP-MPUM057	114X4290	G	MLZ026	27°C	4523	5380	6318	7332	8416	9560	10753	68	37
						32°C	4184	4976	5839	6769	7764	8816	9913		
			114X4293	E		38°C	3744	4456	5228	6060	6949	7889	8875		
						43°C	3345	3991	4688	5438	6240	7092	7988		
		OP-MPUM068	114X4308	G	MLZ030	27°C	5878	7088	8455	9977	11657	13484	15454	69	38
						32°C	5503	6630	7902	9318	10883	12587	14426		
			114X4311	E		38°C	5023	6044	7199	8485	9909	11463	13145		
						43°C	4595	5527	6579	7755	9056	10488	12041		
		OP-MPUM080	114X4321	G	MLZ038	27°C	6909	8306	9877	11612	13515	15583	17810	69	38
						32°C	6451	7751	9206	10818	12582	14500	16569		
			114X4324	E		38°C	5863	7047	8364	9823	11420	13157	15037		
						43°C	5342	6425	7625	8956	10413	12002	13727		
		OP-MPUM107	114X4344	E	MLZ048	27°C	8806	10537	12431	14500	16757	19202	21834	75	44
						32°C	8185	9793	11543	13454	15534	17793	20232		
						38°C	7390	8847	10423	12140	14010	16047	18261		
						43°C	6685	8015	9445	10999	12697	14550			
●●		OP-MPUM125	114X4414	E	MLZ058	27°C	10638	12820	15372	18204	21247	24429	27672	75	44
						32°C	9703	11745	14126	16780	19620	22585	25599		
						38°C	8461	10339	12531	14969	17573	20278	23024		
						43°C	7317	9067	11100	13366	15776	18275	20803		
		OP-MPUM162	114X4434	E	MLZ076	27°C	14044	16679	19518	22583	25902	29489	33349	75	44
						32°C	13063	15415	17940	20675	23650	26883	30387		
						38°C	11867	13829	15944	18256	20798	23597	26677		
						43°C	10873	12466	14210	16140	18306	20739	23447		

Test condition **Superheat 10K**
EN13215
Subcooling within the limits of the condensing unit

Electrical code
E - Compressor 400 V/3 phase/50 Hz, fan 230 V/1 phase/50 Hz
G - Compressor 230 V/1 phase/50 Hz, fan 230 V/1 phase/50 Hz

Sound measurement done in accordance with ISO 9614-1
MBP measured in accordance to EN 13215 @ - 10°C suction, +32°C ambient, SH10K
MLZ type compressor models are scroll compressors
Units can operate down to -30°C evaporating temperature. Refer to dedicated Software or contact Danfoss for more details.

Cooling capacity is given for units with 3-phase compressor. Capacity of single-phase versions is within +/- 1% of this value

Unit	Condenser coil			Condenser fan	Receiver volume [L]	Power consumption [W] at evap. temp.		Dimensions						Weight [kg]	
	Type	Air flow [m³/h]	Int. volume [dm³]	Fan blade Ø [mm]		-10°C	5°C	Housing	Height H [mm]	Width W [mm]	Length D [mm]	Suction line	Liquid line	Gross	Net
OP-MPHM007	A7	2200	0.4	1x356	1.3	457	534	1	652	906	356	3/8"	1/4"	60	48
OP-MPHM010	A7	2200	0.4	1x356	1.3	566	676	1	652	906	356	3/8"	1/4"	63	51
OP-MPHM012	A7	2200	0.4	1x356	1.3	664	801	1	652	906	356	3/8"	3/8"	63	51
OP-MPHM015	A7	2200	0.4	1x356	1.3	829	1021	1	652	906	356	3/8"	3/8"	63	51
OP-MPHM018	A7	2200	0.4	1x356	1.3	908	1120	1	652	906	356	3/8"	3/8"	63	51
OP-MPHM026	D7	3700	0.6	1x457	3.4	1335	1637	2	815	1055	430	5/8"	3/8"	93	79
OP-MPHM034	D7	3700	0.6	1x457	3.4	1840	2333	2	815	1055	430	5/8"	3/8"	96	82
OP-MPUM034	D7	3700	0.6	1x457	3.4	1809(1~) 1740(3~)	1982(1~) 1819(3~)	2	815	1055	430	3/4"	1/2"	104	90
OP-MPUM046	D7	3700	0.6	1x457	3.4	2488(1~) 2403(3~)	2758(1~) 2624(3~)	2	815	1055	430	3/4"	1/2"	104	90
OP-MPUM057	D7	3700	0.6	1x457	3.4	3424(1~) 3143(3~)	3642(1~) 3555(3~)	2	815	1055	430	3/4″	1/2″	104	90
OP-MPUM068	G7	6700	1.8	1x609	6.2	3401(1~) 3272(3~)	3748(1~) 3509(3~)	3	967	1406	481	7/8"	5/8"	135	119
OP-MPUM080	G7	6700	1.8	1x609	6.2	4017(1~) 3967(3~)	4527(1~) 4349(3~)	3	967	1406	481	7/8"	5/8"	135	119
OP-MPUM107	G7	6700	1.8	1x609	6.2	5397	5999	3	967	1406	481	7/8"	5/8"	135	119
OP-MPUM125	J7	9500	2.5	2x609	10.0	6884	7522	4	966	1800	600	1 1/8″	3/4″	187	143
OP-MPUM162	J7	9500	2.5	2x609	10.0	8993	10065	4	966	1800	600	1 1/8″	3/4″	189	144

Power consumption referred at 32°C ambient temp.

Optyma Plus™ new generation – condensing unit R134a MBP

Fan	Test conditions	Unit	Code	Electrical code	Compressor	Amb. temp. °C	Capacity range in [W] at evaporating temperature [°C]							Sound power level dB(A)	Sound pressure level full sphere 10m dB(A)
							-15°C	-10°C	-5°C	0°C	+5°C	+10°c	+15°C		
	SH 10K	OP-MPGM034	114X4210	G	GS34MFX	27°C	1418	1802	2259	2799	3431			67	36
						32°C	1307	1671	2104	2616	3217				
						38°C	1173	1512	1916	2396	2960				
						43°C	1060	1379	1759	2211	2744				
		OP-MPUM034	114X4261	G	MLZ015	27°C	1821	2293	2844	3481	4207	5027	5942	68	37
						32°C	1721	2168	2695	3303	3999	4788	5668		
			114X4264	E		38°C	1601	2019	2511	3084	3742	4488	5327		
						43°C		1892	2356	2897	3521	4231	5031		
		OP-MPUM046	114X4281	G	MLZ021	27°C	2469	4609	5761	7108	8664	10444	12460	68	37
						32°C	2329	4350	5452	6745	8245	9962	11913		
			114X4284	E		38°C	2158	4035	5072	6296	7722	9360	11230		
						43°C		3768	4748	5910	7271	8841	10640		
		OP-MPUM057	114X4290	G	MLZ026	27°C	2974	3729	4602	5594	6710	7950	9312	68	37
						32°C	2796	3516	4348	5294	6357	7540	8839		
			114X4293	E		38°C	2581	3256	4035	4921	5920	7031	8254		
						43°C	2402	3035	3768	4602	5544	6593	7750		
		OP-MPUM068	114X4308	G	MLZ030	27°C	3736	4703	5842	7163	8673	10381	12294	69	38
						32°C	3533	4454	5542	6805	8253	9893	11734		
			114X4311	E		38°C	3290	4150	5171	6362	7731	9285	11034		
						43°C	3086	3893	4855	5981	7281	8761	10428		
		OP-MPUM080	114X4321	G	MLZ038	27°C	4356	5492	6814	8335	10067	12020	14194	69	38
						32°C	4102	5191	6456	7911	9569	11439	13523		
			114X4324	E		38°C	3792	4820	6013	7386	8950	10719	12692		
						43°C	3529	4503	5633	6934	8419	10096	11978		
		OP-MPUM107	114X4344	E	MLZ048	27°C	5684	7116	8801	10735	12901	15296	17906	75	44
						32°C	5344	6709	8318	10164	12246	14543	17048		
						38°C	4935	6207	7717	9457	11422	13596	15971		
						43°C	4593	5781	7201	8844	10707	12773	15036		
		OP-MPUM125	114X4414	E	MLZ058	27°C	6912	8660	10676	12978	15582	18506	21751	75	44
						32°C	6482	8165	10101	12308	14804	17606	20717		
						38°C	5952	7553	9389	11479	13841	16494	19442		
						43°C	5501	7030	8780	10769	13016	15538	18350		
		OP-MPUM162	114X4434	E	MLZ076	27°C	8770	10986	13535	16435	19684	23298	27278	75	44
						32°C	8239	10347	12780	15555	18671	22140	25967		
						38°C	7612	9576	11856	14462	17410	20695	24330		
						43°C	7101	8933	11073	13532	16325	19449	22919		

Test condition **Superheat 10K**
EN13215
Subcooling within the limits of the condensing unit

Electrical code
E - Compressor 400 V/3 phase/50 Hz, fan 230 V/1 phase/50 Hz
G - Compressor 230 V/1 phase/50 Hz, fan 230 V/1 phase/50 Hz

Sound measurement done in accordance with ISO 9614-1
MBP measured in accordance to EN 13215 @ - 10°C suction, +32°C ambient, SH10K
MLZ type compressor models are scroll compressors

Cooling capacity is given for units with 3-phase compressor. Capacity of single-phase versions is within +/- 1% of this value

Unit	Condenser coil			Condenser fan	Receiver volume [L]	Power consumption [W] at evap. temp.		Dimensions						Weight [kg]	
	Type	Air flow [m³/h]	Int. volume [dm³]	Fan blade Ø [mm]		-10°C	5°C	Housing	Height H [mm]	Width W [mm]	Length D [mm]	Suction line	Liquid line	Gross	Net
OP-MPGM034	D7	3700	0.6	1x457	3.4	1040	1358	2	815	1055	430	5/8"	3/8"	96	82
OP-MPUM034	D7	3700	0.6	1x457	3.4	1067(1~) 1017(3~)	1175(1~) 1102(3~)	2	815	1055	430	3/4"	1/2"	104	90
OP-MPUM046	D7	3700	0.6	1x457	3.4	1497(1~) 1334(3~)	1694(1~) 1492(3~)	2	815	1055	430	3/4"	1/2"	104	90
OP-MPUM057	D7	3700	0,6	1x457	3.4	1963(1~) 1640(3~)	2259(1~) 1877(3~)	2	815	1055	430	3/4″	1/2″	104	90
OP-MPUM068	G7	6700	1.8	1x609	6.2	2177(1~) 1895(3~)	2384(1~) 2053(3~)	3	967	1406	481	7/8"	5/8"	135	119
OP-MPUM080	G7	6700	1.8	1x609	6.2	2423(1~) 2282(3~)	2684(1~) 2515(3~)	3	967	1406	481	7/8"	5/8"	135	119
OP-MPUM107	G7	6700	1.8	1x609	6.2	2838	3200	3	967	1406	481	7/8"	5/8"	135	119
OP-MPUM125	J7	9500	2,5	2x609	10,0	4188	4604	4	966	1800	600	1 1/8″	3/4″	187	143
OP-MPUM162	J7	9500	2,5	2x609	10,0	5240	5862	4	966	1800	600	1 1/8″	3/4″	189	144

Power consumption referred at 32°C ambient temp.

Optyma Plus™ new generation – Spare parts & accessories LBP R404A/R507 LBP

Electrical characteristics - 230 V/1 phase/50 Hz

Unit	Wiring diagram	LRA compressor [A] 230 V/ 1 phase	MCC compressor [A] 230 V/ 1 phase	Max cont. power consumption [kW]	MCC Fan [A] 230 V/ 1 phase	Fan Power [W]
OP-LPHM018	WD1	23.5	5.3	0.98	0.32	1x25
OP-LPHM026	WD2	25.7	5.4	1.36	0.32	1x25
OP-LPHM048	WD2	37	11	2.09	0.63	1x75
OP-LPHM068	WD2	53	17	3.51	0.63	1x75

LRA (Locked Rotor Amps)
MCC (Maximum Continuous Current)

Electrical characteristics - 400 V/3 phase/50 Hz

Unit	Wiring diagram	LRA compressor [A] 400 V/ 3phase	MCC compressor [A] 400 V/ 3 phase	Max cont. power consumption [kW]	MCC Fan [A] 230 V/ 1 phase	Fan Power [W]
OP-LPHM048	WD4	16	4.8	2.17	0.63	1x75
OP-LPHM068	WD4	25	8.4	3.46	0.63	1x75
OP-LPHM096	WD4	32	10.1	4.32	1.1	1x130
OP-LPHM136	WD4	51	14.3	6.65	1.1	1x130
OP-LPHM215	WD5	74	22.3	9.8	2x1.1	2x130
OP-LPHM271	WD5	96	27	12.7	2x1.1	2x130

LRA (Locked Rotor Amps)
MCC (Maximum Continuous Current)

Spare parts (Automatic controls)

Unit	Filter drier		Sight glass		Suction valve		Liquid valve		High Pressure switch		Low Pressure switch	
OP-LPHM018	DML083 DCL083	023Z5040 023Z5005	SGN+10s	014F0182	GBC 10s	009G7051	GBC10s	009G7051	ACB-2UB463W	061F8492	ACB-2UA418W	061F7283
OP-LPHM026	DML083 DCL083	023Z5040 023Z5005	SGN+10	014F0172	GBC 12s	009G7052	GBC10s	009G7051	ACB-2UB463W	061F8492	ACB-2UA418W	061F7283
OP-LPHM048	DML083 DCL083	023Z5040 023Z5005	SGN+10	014F0172	GBC 16s	009G7053	GBC10s	009G7051	ACB-2UB463W	061F8492	ACB-2UA418W	061F7283
OP-LPHM068	DML083 DCL083	023Z5040 023Z5005	SGN+10	014F0172	GBC 16s	009G7053	GBC10s	009G7051	ACB-2UB463W	061F8492	ACB-2UA418W	061F7283
OP-LPHM096	DML164 DCL164	023Z5044 023Z5009	SGN+12	014F0173	GBC 22s	009G7055	GBC 12s	009G7052	ACB-2UB463W	061F8492	ACB-2UA418W	061F7283
OP-LPHM136	DML164 DCL164	023Z5044 023Z5009	SGN+12	014F0173	GBC 28s	009G7056	GBC 12s	009G7052	ACB-2UB463W	061F8492	ACB-2UA418W	061F7283
OP-LPHM215	DML166 DCL166	023Z5046 023Z5011	SGN+19	014F0175	GBC 28s	009G7056	GBC18s	009G7054	ACB-2UB463W	061F8492	ACB-2UA418W	061F7283
OP-LPHM271	DML166 DCL166	023Z5046 023Z5011	SGN+19	014F0175	GBC 28s	009G7056	GBC18s	009G7054	ACB-2UB463W	061F8492	ACB-2UA418W	061F7283

Optyma Plus™ new generation – Spare parts & accessories LBP R404A/R507 LBP

Spare parts (Components)

Unit	Fan capacitor [µF]		Receiver (L)		Fan motor (W) (capacitor not included)		Fan blade		Fan grill		Condenser	Optyma Plus controller
OP-LPHM018	1.8	118U3296	1.3	118U3474	25	118U3477	f14″	118U3480	Fan grill, H1	118U3483	118U3492	118U3465
OP-LPHM026	3.5	118U3297	3.4	118U3475	75	118U3478	f18″	118U3481	Fan grill, H2	118U3484	118U3493	118U3465
OP-LPHM048	3.5	118U3297	3.4	118U3475	75	118U3478	f18″	118U3481	Fan grill, H2	118U3484	118U3493	118U3465
OP-LPHM068	3.5	118U3297	3.4	118U3475	75	118U3478	f18″	118U3481	Fan grill, H2	118U3484	118U3493	118U3465
OP-LPHM096	6	118U3298	6.2	118U3476	130	118U3479	f24″	118U3482	Fan grill, H3	118U3485	118U3494	118U3465
OP-LPHM136	6	118U3298	6.2	118U3476	130	118U3479	f24″	118U3482	Fan grill, H3	118U3485	118U3494	118U3465
OP-LPHM215	6	118U3298	10	118U3716	130	118U3479	f24″	118U3482	Fan grill, H3	118U3485	118U3717	118U3465
OP-LPHM271	6	118U3298	10	118U3716	130	118U3479	f24″	118U3482	Fan grill, H3	118U3485	118U3717	118U3465

Spare parts

Unit designation	Crankcase heater	Code number	Temperature sensor (suction & ambient)	Code number	Discharge temperature sensor	Code number	Discharge pressure transmitter	Code number	Suction pressure transmitter	Code number
OP-LPHM018	Belt 50 W	120Z0057	AKS11	084N0003	AKS21A	084N2007	AKS 32R 0...32 bar	118U3722	AKS 32R -1...12 bar	118U3721
OP-LPHM026										
OP-LPHM048	PTC 35 W	120Z0459								
OP-LPHM068										
OP-LPHM096										
OP-LPHM136										
OP-LPHM215										
OP-LPHM271										

Optyma Plus™ new generation – Spare parts & accessories MBP

Electrical characteristics - 230 V/1 phase/50 Hz

Unit	Wiring diagram	LRA compressor [A] 230 V/ 1 phase	MCC compressor [A] 230 V/ 1 phase	Max cont. power consumption [kW]	MCC Fan [A] 230 V/ 1 phase	Fan Power [W]
OP-MPHM007	WD1	20	3.6	0.52	0.32	1x25
OP-MPHM010	WD1	18.4	4.8	0.65	0.32	1x25
OP-MPHM012	WD1	23.4	5.7	0.78	0.32	1x25
OP-MPHM015	WD1	23.5	6.2	0.88	0.32	1x25
OP-MPHM018	WD2	23.6	6.1	1.13	0.32	1x25
OP-MPHM026	WD2	34.6	8.5	1.58	0.63	1x75
OP-MPHM034	WD2	45	12.6	2.32	0.63	1x75
OP-MPGM034	WD2	25.7	6.8	1.29	0.63	1x75
OP-MPUM034	WD3	60	19	2.5	0.63	1x75
OP-MPUM046	WD3	97	25	4.5	0.63	1x75
OP-MPUM057	WD3	97	26	3.7	0.63	1x75
OP-MPUM068	WD3	127	32	6.4	1.1	1x130
OP-MPUM080	WD3	130	38	8.1	1.1	1x130

LRA (Locked Rotor Amps)
MCC (Maximum Continuous Current)

Electrical characteristics - 400 V/3 phase/50 Hz

Unit	Wiring diagram	LRA compressor [A] 400 V/ 3phase	MCC compressor [A] 400 V/ 3phase	Max cont. power consumption [kW]	MCC Fan [A] 230 V/ 1 phase	Fan Power [W]
OP-MPUM034	WD4	30	7	2.5	0.63	1x75
OP-MPUM046	WD4	45	9.5	4.3	0.63	1x75
OP-MPUM057	WD4	45	10	3.7	0.63	1x75
OP-MPUM068	WD4	60	13	5.9	1.1	1x130
OP-MPUM080	WD4	70	15	7.4	1.1	1x130
OP-MPUM107	WD4	87	16	10	1.1	1x130
OP-MPUM125	WD5	95	20	8.7	2x1.1	2x130
OP-MPUM162	WD5	140	25	11.1	2x1.1	2x130

LRA (Locked Rotor Amps)
MCC (Maximum Continuous Current)

Spare parts (Automatic controls)

Unit	Filter drier		Sight glass		Suction valve		Liquid valve		High Pressure switch		Low Pressure switch	
OP-MPHM007	DML082 DCL082	023Z5039 023Z5004	SGN+6s	014F0181	GBC10s	009G7051	GBC6s	009G7050	ACB-2UB463W	061F8492	ACB-2UA418W	061F7283
OP-MPHM010	DML082 DCL082	023Z5039 023Z5004	SGN+6s	014F0181	GBC10s	009G7051	GBC6s	009G7050	ACB-2UB463W	061F8492	ACB-2UA418W	061F7283
OP-MPHM012	DML083 DCL083	023Z5040 023Z5005	SGN+10s	014F0182	GBC10s	009G7051	GBC10s	009G7051	ACB-2UB463W	061F8492	ACB-2UA418W	061F7283
OP-MPHM015	DML083 DCL083	023Z5040 023Z5005	SGN+10s	014F0182	GBC10s	009G7051	GBC10s	009G7051	ACB-2UB463W	061F8492	ACB-2UA418W	061F7283
OP-MPHM018	DML083 DCL083	023Z5040 023Z5005	SGN+10s	014F0182	GBC10s	009G7051	GBC10s	009G7051	ACB-2UB463W	061F8492	ACB-2UA418W	061F7283
OP-MPHM026	DML083 DCL083	023Z5040 023Z5005	SGN+10	014F0172	GBC 16s	009G7053	GBC10s	009G7051	ACB-2UB463W	061F8492	ACB-2UA418W	061F7283
OP-MPHM034	DML083 DCL083	023Z5040 023Z5005	SGN+10	014F0172	GBC 16s	009G7053	GBC10s	009G7051	ACB-2UB463W	061F8492	ACB-2UA418W	061F7283
OP-MPGM034	DML083 DCL083	023Z5041 023Z5006	SGN+10	014F0172	GBC12s	009G7052	GBC10s	009G7051	ACB-2UB463W	061F8492	ACB-2U418AW	061F7283
OP-MPUM034	DML084 DCL084	023Z5041 023Z5006	SGN+12	014F0173	GBC18s	009G7054	GBC12s	009G7052	ACB-2UB463W	061F8492	ACB-2UA520W	061F7520
OP-MPUM046	DML084 DCL084	023Z5041 023Z5006	SGN+12	014F0173	GBC18s	009G7054	GBC12s	009G7052	ACB-2UB463W	061F8492	ACB-2UA520W	061F7520
OP-MPUM057	DML084 DCL084	023Z5041 023Z5006	SGN+12	014F0173	GBC 18s	009G7054	GBC 12s	009G7052	ACB-2UB463W	061F8492	ACB-2UA520W	061F7520
OP-MPUM068	DML165 DCL165	023Z5045 023Z5010	SGN+16	014F0174	GBC22s	009G7055	GBC16s	009G7053	ACB-2UB463W	061F8492	ACB-2UA520W	061F7520
OP-MPUM080	DML165 DCL165	023Z5045 023Z5010	SGN+16	014F0174	GBC22s	009G7055	GBC16s	009G7053	ACB-2UB463W	061F8492	ACB-2UA520W	061F7520
OP-MPUM107	DML165 DCL165	023Z5045 023Z5010	SGN+16	014F0174	GBC22s	009G7055	GBC16s	009G7053	ACB-2UB463W	061F8492	ACB-2UA520W	061F7520
OP-MPUM125	DML166 DCL166	023Z5046 023Z5011	SGN+19	014F0175	GBC 28s	009G7056	GBC 18s	009G7054	ACB-2UB463W	061F8492	ACB-2UA520W	061F7520
OP-MPUM162	DML166 DCL166	023Z5046 023Z5011	SGN+19	014F0175	GBC 28s	009G7056	GBC 18s	009G7054	ACB-2UB463W	061F8492	ACB-2UA520W	061F7520

Optyma Plus™ new generation – Spare parts & accessories MBP

Spare parts (components)

Unit	Fan capacitor [µF]		Receiver (L)		Fan motor (W) (capacitor not included)		Fan blade		Fan grill		Condenser	Optyma Plus controller
OP-MPHM007	1.8	118U3296	1.3	118U3474	25	118U3477	f14"	118U3480	Fan grill. H1	118U3483	118U3492	118U3465
OP-MPHM010	1.8	118U3296	1.3	118U3474	25	118U3477	f14"	118U3480	Fan grill. H1	118U3483	118U3492	118U3465
OP-MPHM012	1.8	118U3296	1.3	118U3474	25	118U3477	f14"	118U3480	Fan grill. H1	118U3483	118U3492	118U3465
OP-MPHM015	1.8	118U3296	1.3	118U3474	25	118U3477	f14"	118U3480	Fan grill. H1	118U3483	118U3492	118U3465
OP-MPHM018	1.8	118U3296	1.3	118U3474	25	118U3477	f14"	118U3480	Fan grill. H1	118U3483	118U3492	118U3465
OP-MPHM026	3.5	118U3297	3.4	118U3475	75	118U3478	f18"	118U3481	Fan grill. H2	118U3484	118U3493	118U3465
OP-MPHM034	3.5	118U3297	3.4	118U3475	75	118U3478	f18"	118U3481	Fan grill. H2	118U3484	118U3493	118U3465
OP-MPGM034	3.5	118U3297	3.4	118U3475	75	118U3478	f18"	118U3481	Fan grill. H2	118U3484	118U3493	118U3465
OP-MPUM034	3.5	118U3297	3.4	118U3475	75	118U3478	f18"	118U3481	Fan grill. H2	118U3484	118U3493	118U3465
OP-MPUM046	3.5	118U3297	3.4	118U3475	75	118U3478	f18"	118U3481	Fan grill. H2	118U3484	118U3493	118U3465
OP-MPUM057	3.5	118U3297	3.4	118U3475	75	118U3478	f18"	118U3481	Fan grill. H2	118U3484	118U3493	118U3465
OP-MPUM068	6	118U3298	6.2	118U3476	130	118U3479	f24"	118U3482	Fan grill. H3	118U3485	118U3494	118U3465
OP-MPUM080	6	118U3298	6.2	118U3476	130	118U3479	f24"	118U3482	Fan grill. H3	118U3485	118U3494	118U3465
OP-MPUM107	6	118U3298	6.2	118U3476	130	118U3479	f24"	118U3482	Fan grill. H3	118U3485	118U3494	118U3465
OP-MPUM125	6	118U3298	10	118U3716	130	118U3479	f24"	118U3482	Fan grill. H3	118U3485	118U3717	118U3465
OP-MPUM162	6	118U3298	10	118U3716	130	118U3479	f24"	118U3482	Fan grill. H3	118U3485	118U3717	118U3465

Spare parts

Unit designation	Crankase heater	Code number	Temperature sensor (suction & ambient)	Code number	Discharge temperature sensor	Code number	Discharge pressure transmitter	Code number	Suction pressure transmitter	Code number
OP-MPHM007	Belt 50 W	120Z0057	AKS11	084N0003	AKS21A	084N2007	AKS 32R 0...32 bar	118U3722	AKS 32R -1...12 bar	118U3721
OP-MPHM010										
OP-MPHM012										
OP-MPHM015										
OP-MPHM018										
OP-MPHM026										
OP-MPHM034										
OP-MPGM034										
OP-MPUM034	Belt 70 W	120Z5040								
OP-MPUM046										
OP-MPUM057										
OP-MPUM068										
OP-MPUM080										
OP-MPUM107										
OP-MPUM125										
OP-MPUM162										

Designation system for the Optyma Plus™ new generation program

(additional program frequency etc.: please contact your local wholesaler)

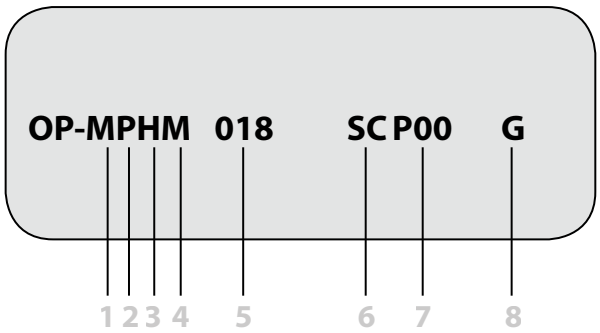

1 Application	L = LBP M = MBP
2 Design	P = Packaged units
3 Refrigerant	H = R404A/R507 G = R134a U = R404A, R134a, R507
4 Condenser option	M = Standard with micro channel heat exchanger
5 Displacement	026 = 26 cm^3 171 = 171 cm^3
6 Compressor platform	GS= GS (reciprocating) NF= NF (reciprocating) NT= NTZ (reciprocating) SC= SC (reciprocating) ML= MLZ (scroll)
7 Version	P00
8 Electrical code	G = Compressor 230 V/1 phase/50 Hz, fan 230 V/1 phase/50 Hz E = Compressor 400 V/3 phase/50 Hz, fan 230 V/1 phase/50 Hz

Select the right Danfoss Optyma Plus™ new generation condensing unit accordingly to your needs

	Meat +1°C - 18h		Fish +1°C - 18h		Laboratory +12°C - 18h		Food & vegetables +8°C - 18h		Food & vegetables 0°C - 18h		Butter, eggs & cheese +5°C - 18h		Freezer -18°C - 16h	
	Cap.* [W]	CR ** [m³]	Cap.* [W]	CR ** [m³]	Cap.* [W]	CR ** [m³]	Cap.* [W]	CR ** [m³]	Cap.* [W]	CR ** [m³]	Cap.* [W]	CR ** [m³]	Cap.* [W]	CR ** [m³]
MPHM007	670	4	670	4	930	6	930	11	670	4	760	5		
MPHM010	900	7	900	6	1270	8	1270	17	900	7	1030	9		
MPHM012	1090	10	1090	8	1530	10	1530	25	1090	8	1240	12		
MPHM015	1350	13	1350	11	1890	13	1890	32	1350	12	1530	16		
MPHM018	1570	15	1570	13	2200	15	2200	40	1570	14	1790	20		
MPHM026	2460	30	2460	25	3450	25	3450	75	2460	27	2800	35		
MPHM034	3200	45	3200	35	4400	35	4400	100	3200	38	3610	50		
MPUM034	3930	60	3930	47	5060	40	5060	130	3930	50	4340	65		
MPUM046	5230	85	5230	70	6620	65	6620	180	5230	70	5730	95		
MPUM057	6200	105	6200	85	7760	90	7760	220	6200	90	6770	115		
MPUM068	8450	155	8450	125	10880	160	10880	330	8450	130	9320	170		
MPUM080	9840	185	9840	150	12580	190	12580	390	9840	150	10820	210		
MPUM107	12290	240	12290	190	15530	230	15530	500	12290	200	13450	260		
MPUM125	15160	310	15160	250	19620	300	19620	640	15160	250	16780	340		
MPUM162	19000	400	19000	320	23650	360	23650	780	19000	320	20670	420		
LPHM018													720	3
LPHM026													1050	5
LPHM048													2090	16
LPHM068													3160	32
LPHM096													4230	47
LPHM136													6080	70
LPHM215													9440	110
LPHM271													12290	145

Data refers to +32 °C ambient temperature
Refer to Danfoss for different working conditions
Application - Cold room Temperature - Daily working hours
* Cooling capacity at 32 °C ambient temperature
** Volume of cold room

Data are given as approximate guidelines to select and quote units. Precise selection must be carried out according to specific local conditions.
Danfoss cannot be held responsible for any mistakes.

Optyma Plus™ new generation – Dimensions

Housing 1

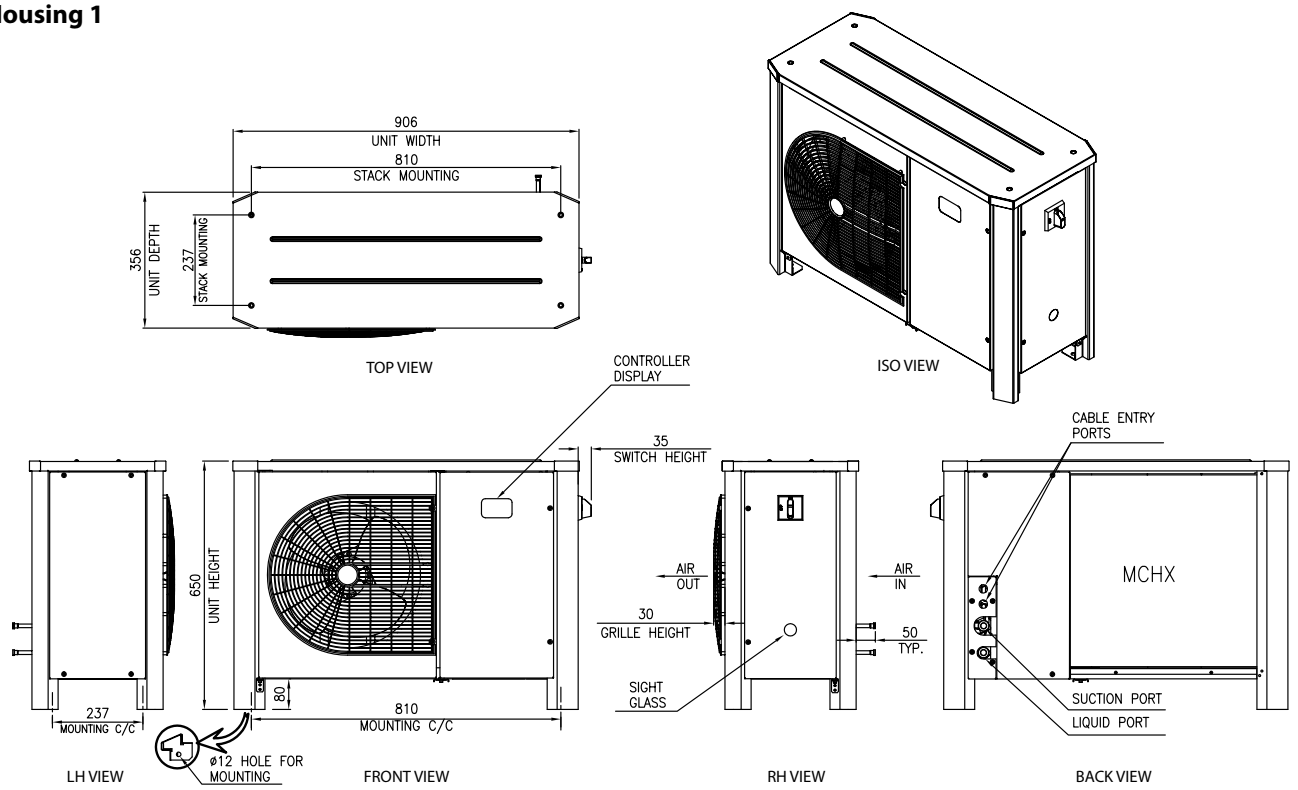

Housing 2

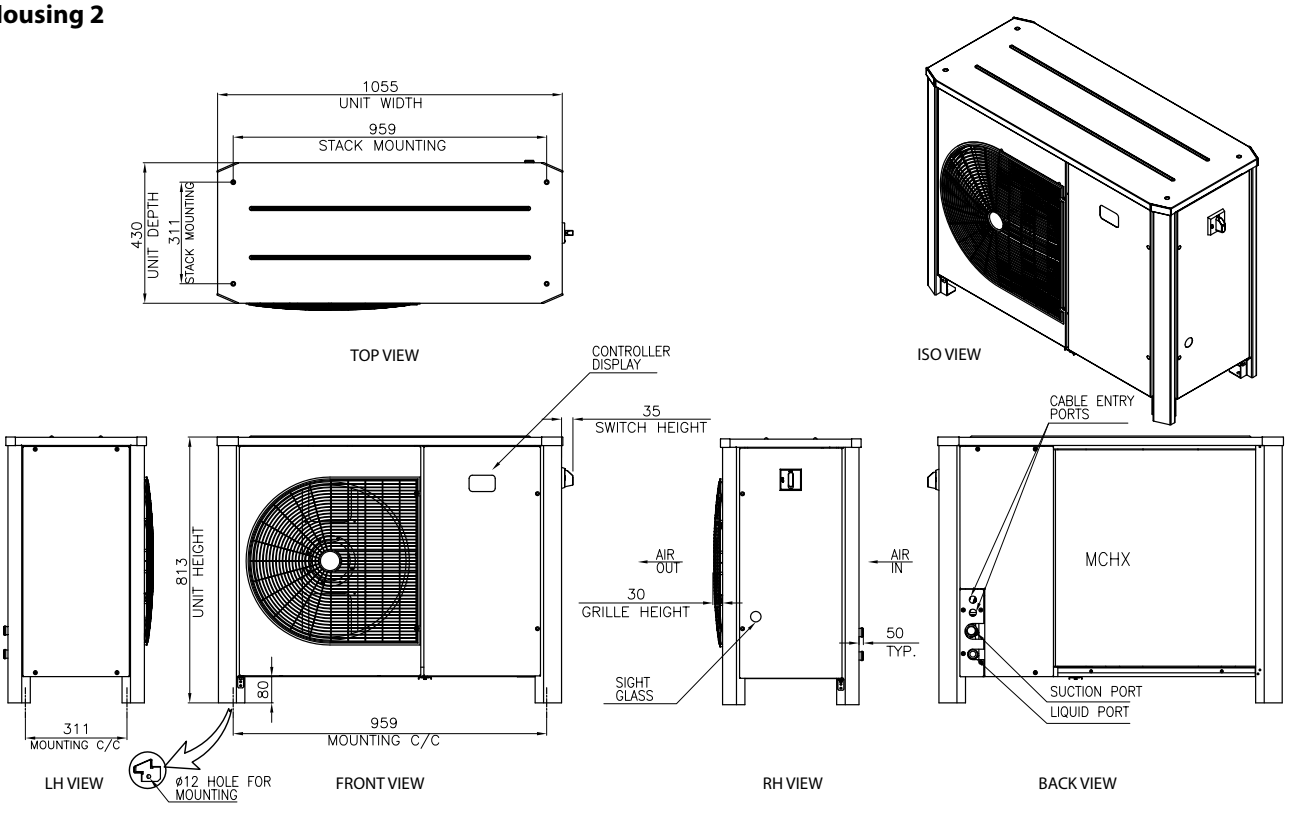

Optyma Plus™ new generation – Dimensions

Housing 3

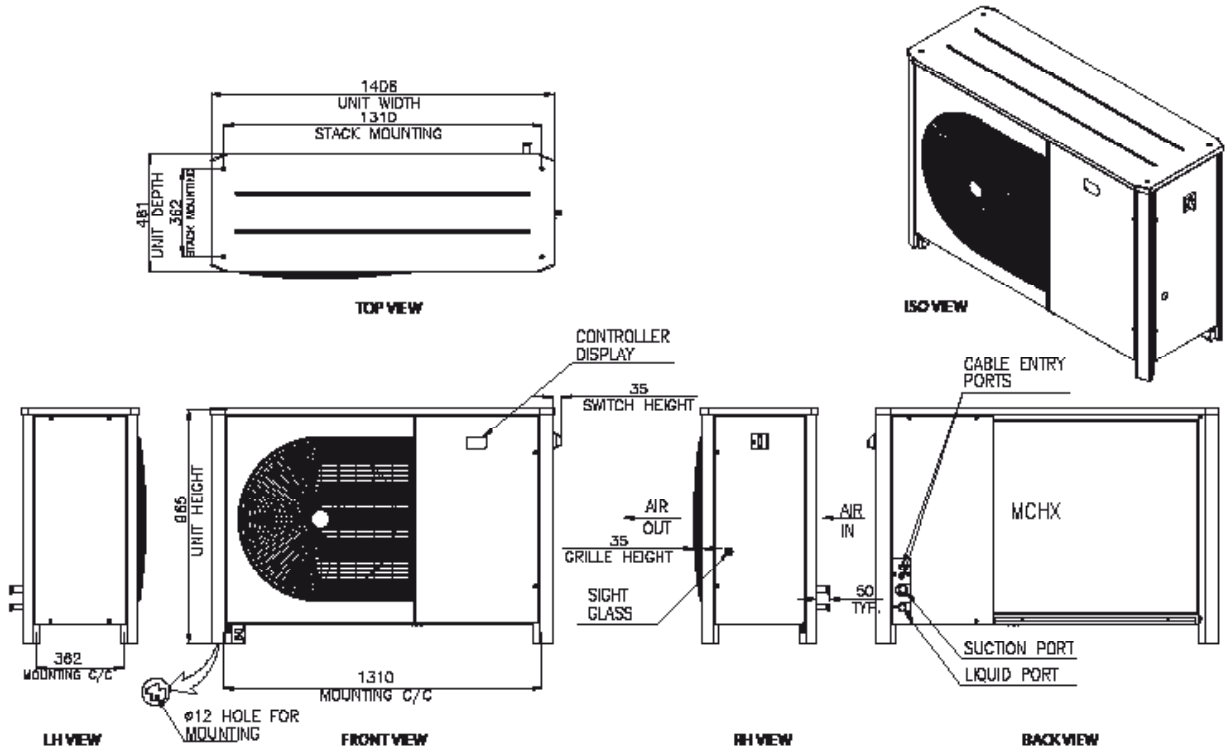

Housing 4

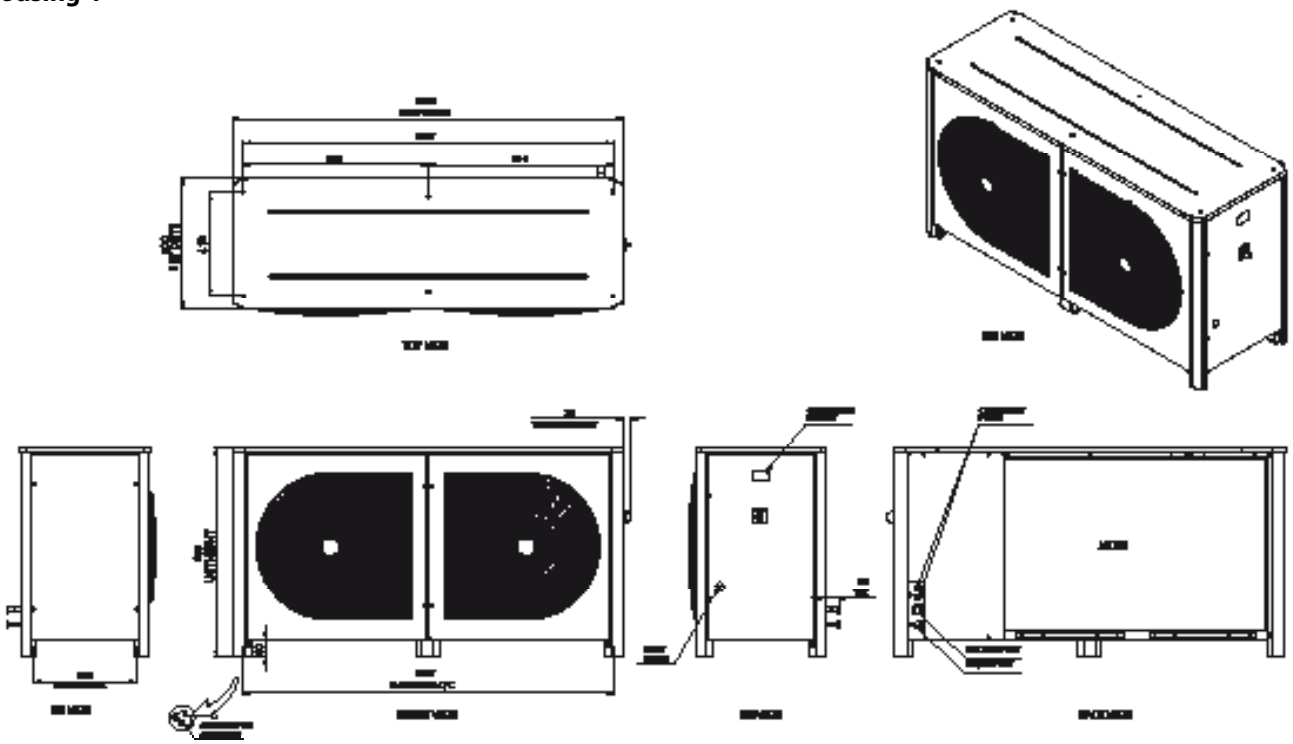

Optyma Plus™ new generation – Electrical wiring diagrams

Code G : OP-LPHM018 & OP-MPHM007-010-012-015

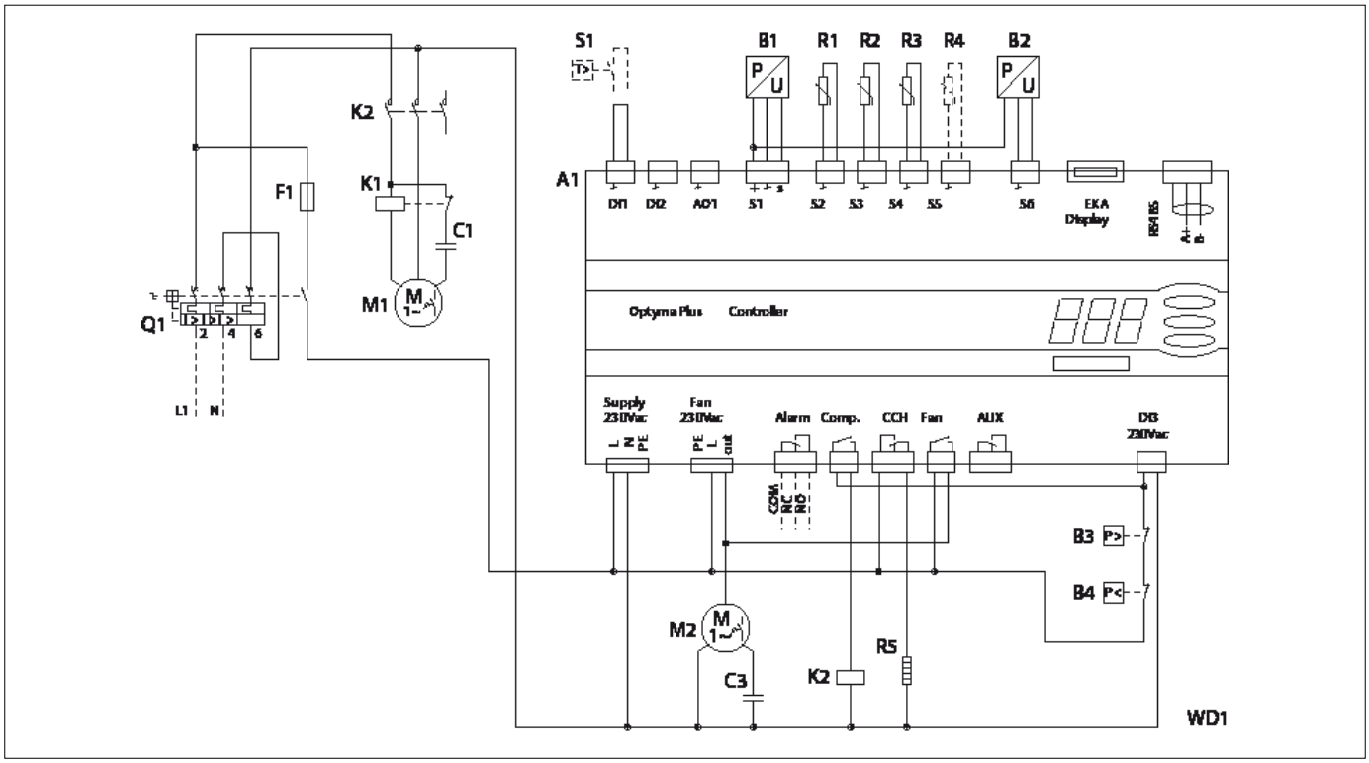

Code G : OP-LPHM026-048-068 & OP-MPHM018-026-034 & OP-MPGM034

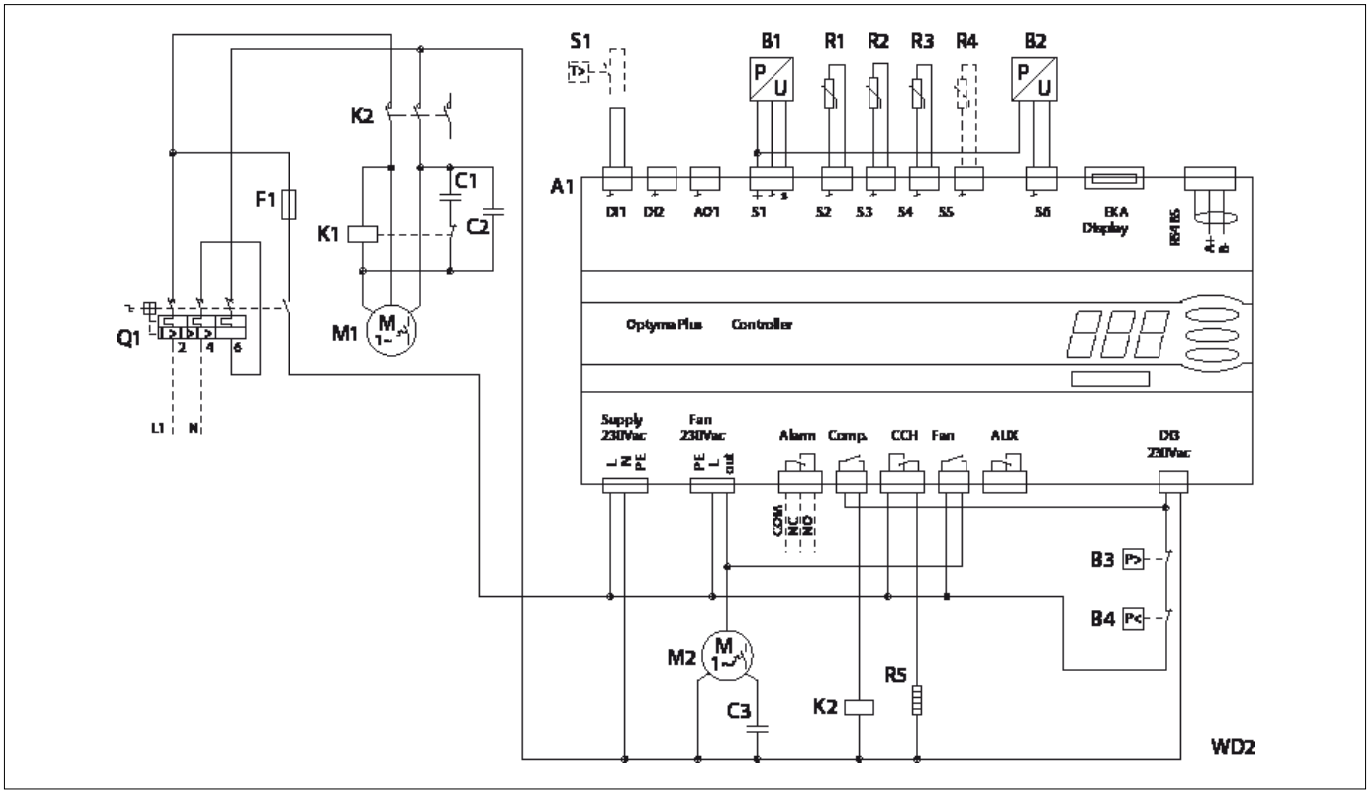

***Legend*:**
A1: Optyma Plus™ Controller
B1 : Condensing Pressure Transducer
B2 : Suction Pressure Transducer
B3 : High Pressure Switch
B4 : Low Pressure Switch
C1 : Start Capacitor (Compressor)
C2 : Run Capacitor (Compressor)
C3 : Run Capacitor (Fan)
F1 : Fuse (Control Circuit)
K1 : Start Relay
K2 : Contactor
M1: Compressor
M2: Fan Motor
Q1 : Main Switch
R1 : Ambient Temp. Sensor
R2 : Discharge Temp. Sensor
R3 : Suction Temp. Sensor
R4 : Auxiliary Temp. Sensor (optional)
R5 : Crankcase Heater
S1 : Room Thermostat (optional)
X1 : Terminal
Supply : Supply
Fan : Fan
Alarm : Alarm
Comp. : Compressor
CCH : Crankcase Heater
Aux : Auxiliary

Optyma Plus™ new generation – Electrical wiring diagrams

Code G : OP-MPUM034-046-057-068-080

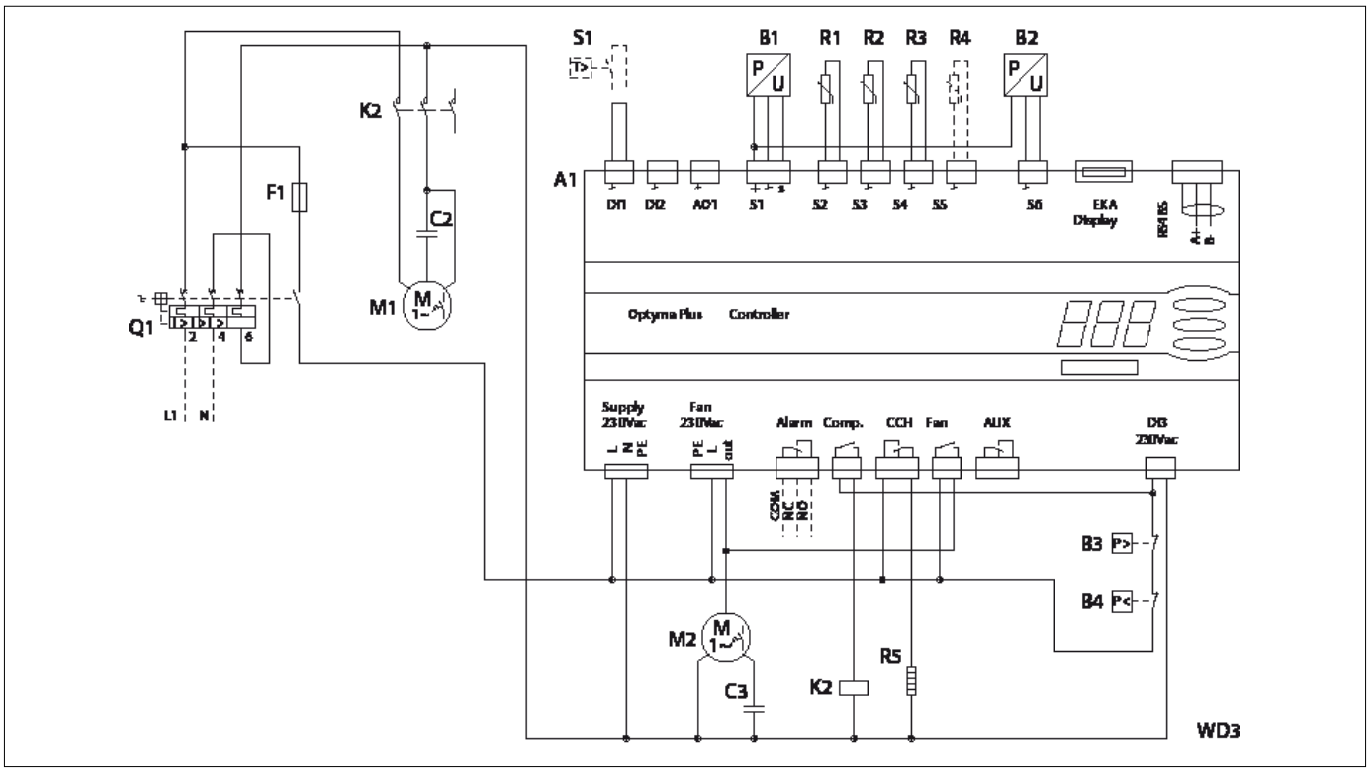

Code E : OP-LPHM048-068-096-136 & OP-MPUM034-046-057-068-080

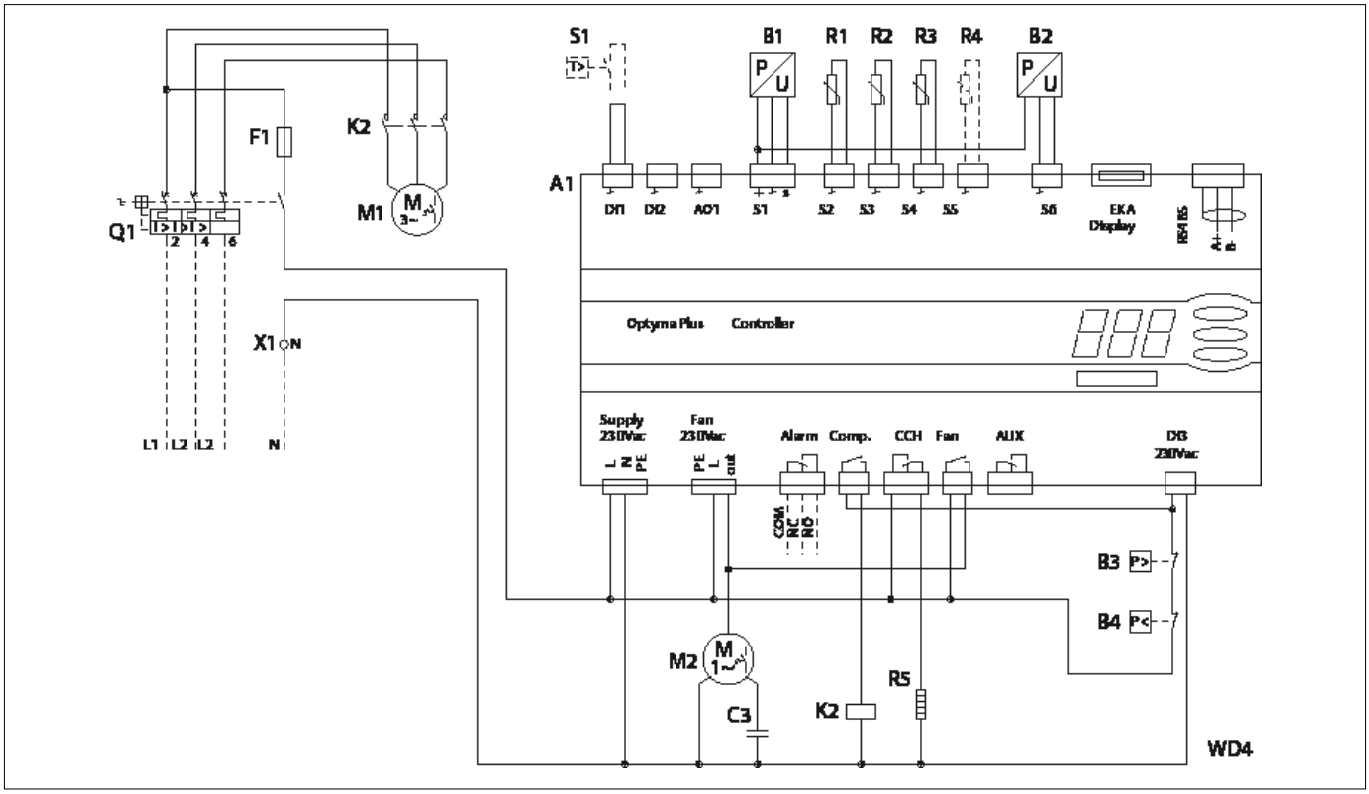

***Legend*:**
A1: Optyma Plus™ Controller
B1 : Condensing Pressure Transducer
B2 : Suction Pressure Transducer
B3 : High Pressure Switch
B4 : Low Pressure Switch
C2 : Run Capacitor (Compressor)
C3 : Run Capacitor (Fan)
F1 : Fuse (Control Circuit)
K2 : Contactor
M1: Compressor
M2: Fan Motor
Q1 : Main Switch
R1 : Ambient Temp. Sensor
R2 : Discharge Temp. Sensor
R3 : Suction Temp. Sensor
R4 : Auxiliary Temp. Sensor (optional)
R5 : Crankcase Heater
S1 : Room Thermostat (optional)
X1 : Terminal
Supply : Supply
Fan : Fan
Alarm : Alarm
Comp. : Compressor
CCH : Crankcase Heater
Aux : Auxiliary

Optyma Plus™ new generation – Electrical wiring diagrams

Code E : OP-LPHM215-271 & OP-MPUM125-162

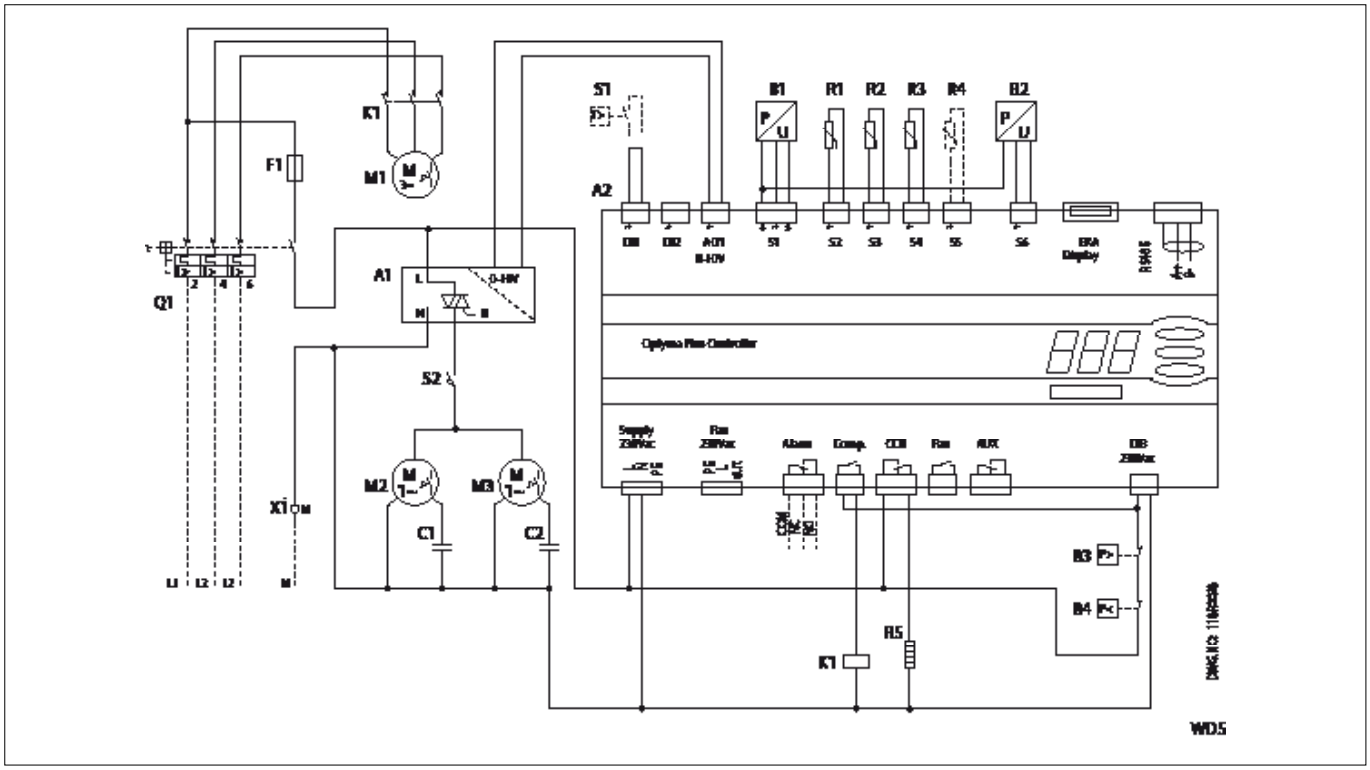

A1 : Fan Speed Controller
A2 : Optyma Plus Controller
B1 : Condensing Pressure Transducer
B2 : Suction Pressure Tranducer
B3 : High Pressure Switch
B4 : Low Pressure Switch
C1 : Run Capacitor (Fan 1)
C2 : Run Capacitor (Fan 2)
F1 : Fuse (Control Circuit)
K1 : Contactor
M1: Compressor
M2: Fan Motor 1
M3: Fan Motor 2
Q1 : Main Switch
R1 : Ambient Temp.Sensor
R2 : Discharge Temp.Sensor
R3 : Suction Temp.Sensor
R4 : Auxiliary Temp.Sensor (optional)
R5 : Crankcase Heater
S1 : Room Thermostat (optional)
S2 : Door Limit Switch
X1 : Terminal

Supply : Supply
Fan : Fan
Alarm : Alarm
Comp. : Compressor
CCH : Crankcase Heater
Aux : Auxiliary

Notes

Danfoss CO_2 product range

Product Grouping	Product	Product Description
Transcritical Expansion Valves	CCMT	Electrically operated high pressure expansion valve
	ICMTS	Motorized transcritical control valves
Pressure Regulating & Gas-Bypass Valves	ICS with CVP-HP/XP	Mechanical backpressure regulators
	CCM	Standstill capable electronic backpressure regulators
Electronic Expansion Valves	AKVH	Standstill capable pulse width modulating expansion valves
	AKV	Pulse width modulating expansion valves
	AKVA	Industrial pulse width modulating expansion valves
	ICM	Industrial motorized expansion valves
	CCM	Standstill capable motorized expansion valves
Valve Stations	ICF	Industrial valve stations
Solenoid Valves	EVR 2-8	Small solenoids
	EVRH 10-40	Large solenoids
	EVRS	Industrial solenoids
	EVRST	Industrial solenoids capable of opening at 0 differential
	ICS + EVM	Industrial solenoid valves for large capacities
Line Components	SVA-S and SVA-L	Industrial stop valves
	SCA-X and CHV-X	Industrial stop/check and check valves
	SNV-ST and SVA-SS	Industrial stop needle valves
	GBC for CO_2	Ball valves
	NRV	Check valves
	SG	Sight glasses - inline and socket versions
	DCRH	Exchangeable core filter driers
	DML	Filter driers
	DMT	Transcritical oil and refrigerant driers
	FIA	Filters
Regulating Valves	REG-SA and REG-SB	Regulating valves for pump recirculated systems
Liquid Level Controls	AKS 4100	Liquid Level Sensors
	EKC 347	PI controllers
Safety valves	SFA 15	Safety relief valves
	DSV	Industrial double safety relief valve manifolds
Pressure Switches	RT	Differential pressure switches
	MBS 5000	Transcritical pressure switches
	KP 6	Pressure switches
Pressure Sensors	AKS 2050	Radiometric transcritical pressure transmitters
	AKS 32	Pressure transmitters (0-5V signal)
	AKS 32R	Radiometric pressure transmitters
	AKS 33	Pressure transmitters (4-20mA signal)
Temperature Sensors	AKS 11	Suction side sensor
	AKS 21A	Discharge side sensor
Gas Detection	GD	Gas detectors
Electronic HP Controls	EKC326A	Controllers for transcritical operation and gas bypass
Electronic Evaporator Controllers	AK CC 450	CO_2 "brine" case controllers
	AK CC 550	Single case controllers
	AK CC 750	Multi-case controllers
Cascade HX controller	EKC 313	CO_2/CO_2 cascade heat exchanger controllers
	EKC 316A	X-refrigerant/CO_2 expansion valve controllers
Pack Controllers	AK PC 740	Pack controllers (up to 4 compressors)
	AK PC 780	Pack controllers (up to 8 compressors)
	XM 205A	8 analog input/ 8 output relay extension module
System Manager	AK SC 255	CO_2 supermarket system manager
Service Tool	MIMIC	Graphical system monitoring software
	AKM	Service technician software

For more information on Danfoss CO_2 products visit www.danfoss.com/co2

Maximum working pressure (bar)	Application	
	Commercial Refrigeration incl. Food Retail	Industrial Refrigeration
140	●	
140	●	●
52	●	●
90	●	●
90	●	
46	●	
42		●
52 (65)*	●	●
90	●	●
52		●
46	●	●
46	●	●
50		●
50		●
52 (65)*		●
52		●
52		●
52		●
46	●	
46	●	
46	●	
46	●	●
46	●	
140	●	
52		●
52	●	●
100	●	●
	●	●
40	●	●
40	●	●
47	●	●
160	●	●
46	●	●
250	●	●
55	●	●
55	●	●
55	●	●
	●	●
	●	●
	●	●
	●	
	●	
	●	
	●	
	●	
	●	●
	●	
	●	
	●	
	●	
	●	
	●	

*A special high pressure version is available

Use of flammable refrigerants such as hydrocarbons

The use of low GWP flammable refrigerants is increasing so flammable refrigerants, whether natural or chemical substances, are now used at an increasing rate in general refrigeration applications globally.
The increasing use of hydrocarbons means that refrigeration contractors and service technicians without prior experience of flammable refrigerants are now starting to work with these substances. There is therefore an increased risk of hazardous situations and to limit the risks for customers and end-users, Danfoss requires a formal agreement to be signed when our customers buy products applicable for flammable refrigerants in non-industrial refrigeration applications.

The agreement works as a guide. It builds on the most important international standards to improve safety.

The main points include:
- Follow the relevant norms and legislation.
- Ensure that only competent people are working with flammable refrigerants, including technicians servicing the refrigeration system.
- Have business liability insurance.
- Where Danfoss products are used, only components and spare parts approved for flammable refrigerants shall be used.

Refrigeration Controls

Thermostatic expansion valves type TUBE and TUCE
- Bi-flow function.
- Capacities up to 20 kW.
- Max. working pressure 34 bar.
- Stainless steel, hermetically tight solde version.
- Bimetal connections for fast and safe soldering.
- Connections 1/4" and 3/8" inlet, 1/2" outlet.
- External pressure pressure equalization
- Adjustable superheat type (TUBE) available for laboratory use.

Expansion valves type TGE
- Bi-flow with expansion in both directions.
- Capacities up to 130 kW
- Head pressure independent.
- Balance port (BP).
- Max. working pressure 46 bar.
- Cylindrical bulb design, with new bulb strap.
- Inlet in 5/8" or 7/8", outlet 7/8".
- External pressure equalization.
- Adjustable superheat setting.

Solenoid valve type EVR
- Direct or servo operated solenoid valve especially designed for liquid, suction, and hot gas lines.
- Media temperatures up to 105 °C.
- Solder connections up to 7/8 in.
- Extended ends for soldering make installation easy. It is not necessary to dismantle the valve when soldering.
- Wide choise of coils for a.c. and d.c.
- Fast and safe mounting of "Clip-on"-coil.
- MOPD up to 25 bar with 14 W coil.

Shut-off valve type BML
- Manual shut-off valve for installation in liquid, suction and hot gas lines.
- Connections size up to 22mm (7/8") ODF.
- Capacities (K_v) 0.3 -2.9 m3/h.

Check valves type NRV and NRVH
- Non-return valves for liquid, hot-gas and suction lines.
- NRVH with stronger spring to avoid resonance problems with compressors connected in parallel.
- Connections size up to 22 mm (7/8") ODF.
- Capacities (K_v) 0.56 -5.5 m3/h.

Filter driers type DCL and DML
- Protects refrigeration and air-conditioning systems from moisture, acids and solid particles.
- Connections size up to 22 mm (7/8") ODF.
- Capacities up to 100 kW.

Sight glasses type SGI and SGN
- Sight glasses for monitoring condition and moisture content of refrigerant and the flow in oil return lines.
- SGI for R290, R600 and R600a, and SGN for R1270.
- Connections size up to 22mm (7/8") ODF.

Thermostat type RT
- 2 m capillary tubes.
- Range -5°C to 30°C.
- High temperature versions available up to 250°C.

Pressure control type RT
- Connection G 3/8A + welded nipple ∅6.5/10 mm.
- Range RT 5E: 4 to 17 bar.
- Regulating ranges available from -0.8 bar as minimum up to 30 bar as maximum.

Electronic Refrigeration Controller type ERC
- Manages all energy consuming parts in the refrigeration appliance
- Designed to cut energy consumption
- IP rated body for high moisture resistance
- Internationally approved hardware (CE, UL, GOST, and many more)
- For use in all climates, indoors as well as outdoors.
- IECEx approved for use with hydrocarbon refrigerants
- Can be used on all light commercial applications.

Pressure controls type KP
- Protects against excessively low suction or high discharge pressure.
- The high pressure controls are equipped with failsafe double bellows, and low pressure controls with reduced bellow travel to enhance life time
- Manual and automatic reset available
- Regulating ranges -0.2 to 7.5 bar and 8 to 32 bar.
- Connection ¼" ODF.

Differential pressure control type RT 260 AE and RT 262 AE
- Connection G 3/8A + welded nipple ∅6.5/10 mm.
- Regulating range 0.1 to 4 bar.

Differential pressure controls type MP 55E
- Protects refrigeration compressors against low lubricating oil pressure.
- Wide regulating range (ΔP 0.3 to 4.5 bar).
- Connections ¼" ODF.

Compressors and Condensing Units for R290

Running with R290 for light commercial refrigeration in LMBP applications

- Such as bottle coolers and vending machines, water and beer coolers, display freezers, food and delicatessen
- Small dimensions make compact cabinets
- Low sound emission
- Reduced installation and running costs

Fix speed Compressors and Condensing Units range

- Available in T, N, SC platforms (3-21 cm^3)
- Application at high ambient temperature possible
- High appliance and system robustness at rough operating conditions
- Insensitive towards unstable electric power supply
- Prewired and ready to braze Condensing Units

Variable Speed SLV15CNK.2 Compressor and Controller

- Variable speed 2000 – 4000 rpm, with permanent magnet motor
- Intelligent controller for whole appliance will save up to 40% energy
- Monitor system performance, intelligent controller for ultimate control and alarm management, HACCP compliance easy
- Built-in data logging function allows food quality and safety
- Protection: current, speed, temperature; electronic thermostat

Direct Current Compressors for R290 and R600a

BD running with R290 or R600a for stationary LMBP applications, freezers and solar powered systems

- Such as ice cream freezers and boxes, pharmaceutical applications up to 200 litres
- 10-45 V and 12-24 V DC
- Electronic control unit with built-in speed control, thermostats signal, thermal protection, safety against destructive battery discharge, electronic thermostat and fan speed control on selected models

Pressurize Your Phone with Danfoss KoolApp™

Convenient and easy to use, the new mobile application from Danfoss.

KoolApp™ is the new Danfoss App and features a library of several practical tools for the refrigeration professional on the go. KoolApp will continue to expand in the future so please keep yourself updated by visiting: http://www.danfoss.com/KoolApp

Currently, KoolApp features the electronic version of the well-known Danfoss **Refrigerant Slider**! KoolApp™ turns your smartphone into a user-friendly, quick pressure-to-temperature refrigerant converter. It is designed for installers, distributors and producers of air conditioning and refrigeration equipment, but will also be useful for other industry professionals and students. In the current version there are 48 different refrigerants including both "natural" and "traditional" refrigerants, covering almost all media normally used in air conditioning and refrigeration systems. More will be added via updates pending user requests – so please do not hesitate to give us your feedback in order for us improve the app to suit your needs!

CoolGame is now also a part of the KoolApp™: Enjoy yourself for a while and test your refrigeration know-how compared to colleagues around the world. The gaming concept is that you build a specific refrigeration circuit as fast as possible by placing the components in the correct place in the system.
You can establish your own leagues to compete against your local colleagues or classmates, and at the same time get the chance to secure your own place in the Danfoss? Hall of Fame!
You have only got limited time to build the circuit! Any remaining time is converted to points and added to your score. Therefore, the faster you are the higher score!

Download KoolApp™ today from the AppStore or Google Play (Android Market) and discover all of the amazing features for yourself!

MAKING MODERN LIVING POSSIBLE

Danfoss

Danfoss Learning
Learning is Earning
Danfoss Learning is your online access point to knowledge.

www.learning.danfoss.co.uk

The Danfoss product range for the refrigeration and air conditioning industry

Danfoss Refrigeration & Air Conditioning is a worldwide manufacturer with a leading position in industrial, commercial and supermarket refrigeration as well as air conditioning and climate solutions.

We focus on our core business of making quality products, components and systems that enhance performance and reduce total life cycle costs – the key to major savings.

We offer a single source for one of the widest ranges of innovative refrigeration and air conditioning components and systems in the world. And, we back technical solutions with business solutions to help your company reduce costs, streamline processes and achieve your business goals.

Danfoss A/S · www.danfoss.com

Danfoss can accept no responsibility for possible errors in catalogues, brochures and other printed material. Danfoss reserves the right to alter its products without prior notice. This also applies to products already on order provided that such alterations can be made without subsequent changes being necessary in specifications already agreed. All trademarks in this material are property of the respective companies. Danfoss and the Danfoss logotype are trademarks of Danfoss A/S. All rights reserved.

DKRA.PK.100.A6.02 / 520B5071

Produced by Metaphor/bpv August 2012