Secop strives to be the first choice for partners searching for leading-edge refrigeration solutions and premium customer experience.

Secop is committed to delivering advanced refrigeration compressors and controls, offering customers tailored sustainable solutions for light commercial, battery-driven, and special cooling applications.

HERMETIC COMPRESSORS

SECOP

DC VOLTAGE

VARIABLE SPEED DRIVE

PREMIUM CONTROLLERS

MOBILE COOLING

TABLE OF CONTENTS

1 **BD Compressors – Product Range** 4
BD Compressors – Technical Data & Electronics Units 6
Code Numbers BD35/50/80F | BD250GH.2 | BD35F-HD.2 | BD35F-B BD35/50K | BD80/100CN 14
Code Numbers BD250GH.2 | BD350GH with 101N07xx Series Controllers 16
Code Numbers BD350GH | BD220CL with 101N08xx Series Controllers 18
Code Numbers BD1.4F-AUTO.3 | BD1.4F-VSD.2/.3 | BD1.4F-VSD-HD 20

2 **Application Examples** 22
Comfort Cooling in Trucks 26
Cooling in Maritime Appliances 28
Cooling in Recreational Vehicles (RV) 30
Refrigerators in Trucks 32
Cooling in Medi Boxes 34
Solar Assisted Cooling 36
Cooling in Portable Cooling Boxes 38
Control your Cold Chain – BD Van Boxes 40
Telecom Cooling – Increase Battery Lifetime 42
Mobile Refrigeration in Cars 44
Mobile Refrigeration in Buses 46
Air Freight Cooling 48

3 **DC Compressors Basics** 50
3.1 Secop Variable Speed Compressors for Direct Current 52
3.2 Electronic Units – Technical Data 60
3.3 Electronic Units – Housings 62
3.4 Electronic Units – Features 64
3.5 Precondition for Long Operating Life 74
3.6 Design Limits 75
3.7 Moisture and Impurities / Filter Drier Selection 76
3.8 Condition at Delivery / Warnings 77
3.9 Variable-Speed Compressors – Capillary & Charge Determination 79
3.10 Max. Refrigerant Charge 80
3.11 Conversions 81
3.12 Mounting the Compressor 82
3.13 Mounting Accessories 83
3.14 Shipment Positions 84
3.15 Sectional Drawing BD P-Housing 85

4 **Product Selector in Detail** 86

BD COMPRESSORS – PRODUCT RANGE

1

Modern comfort is brought into life when leaving home. As people go mobile, so does food. The excellent performance of the BD series safeguards food preservation.

With our outstanding DC compressors for cars, vans, boats, trucks, etc., Secop has transcended the barriers for mobile refrigeration.

BD80 / 100CN
R290, -40°C, -10°C evap. temp.

Freezer applications, solar-powered applications, ice cream boxes up to 200 l, 20-164 W / 31-209 W cooling capacity*.

BD35K Multivoltage and BD50K
R600a, -30°C, +10°C evap. temp.

Solar-powered applications, etc., 100-250 l coolers, 13-242 W cooling capacity*. BD35K can be powered with AC and DC, 85-240 V AC 50/60 Hz, 12-24 V DC, automatic selection of AC when available.

BD1.4F-AUTO.3 and BD1.4F-VSD.3
R134a/R1234yf, -30°C, +5 and +15 / 0°C evap. temp.

In-car cabinets and all mobile applications for portable boxes, boats, trucks, etc.,14-108 W and 7-218 W / 5-85 W cooling capacity*.

BD350GH
R134a, -25°C, +15°C evap. temp.

Tailored for spotcooling systems in sleeping compartments in trucks, caravans, golf buggies, etc., 85-786 W cooling capacity*.

BD250GH.2
R134a, -25°C, +15°C evap. temp.

Designed for cabin cooling in trucks during nighttime, very silent operation, 31-446 W cooling capacity*.

BD35F/50F Multivoltage
R134a, -30°C, +10°C evap. temp.

All mobile applications for portable boxes, boats, trucks, etc., can be powered with AC and DC, 85-240 V AC 50/60 Hz, 12-24 V DC, automatic selection of AC when available, 15-152 W / 20-191 W cooling capacity*.

TOOL4COOL®
Flexible Control Settings

TOOL4COOL® Software

Tool4Cool® is a unique PC software tool that enables you to precisely configure your Secop BD compressors to your cooling systems.

Via microprocessor-based controllers, Tool4Cool® gives you easy access to all parameters. These can be changed, monitored, downloaded or uploaded to get the optimum performance out of your cooling system.

* EN12900/CECOMAF conditions:
Condensing temp.: 55°C | Suction gas temp.: 32°C | Ambient temp.: 32°C, | Liquid temp.: no subcooling

BD Micro · R134a · R1234yf

Compressor	Code number	Application	ASHRAE Capacity [W] Tc=54.4°C, Tliq=32.2°C, Tsuc=32.2°C Evaporating temperature [°C]						ASHRAE LBP rating point -23.3°C / 54.4°C		ASHRAE MBP rating point -6.7°C / 54.4°C		ASHRAE HBP rating point 7.2°C / 54.4°C		Displacement	Power	Compressor Cooling (refer to data sheet)
			-35	-15	-5	0	10	15	Cooling capacity [W]	COP [W/W]	Cooling capacity [W]	COP [W/W]	Cooling capacity [W]	COP [W/W]	[cm³]	[HP]	
BD1.4F-AUTO.3 3000 rpm ●	109Z0106	L/MBP	–	47	83	106	–	–	24	0.93	68	1.60	–	–	1.41	1/12	S
BD1.4F-VSD.3 2000 rpm ●	109Z0209	L/MBP	–	28	52	68	105	126	14	0.83	43	1.53	83	2.05	1.41	1/12	S
BD1.4F-VSD.3 4000 rpm ●	109Z0209	L/MBP	–	65	114	144	214	254	34	0.94	94	1.59	172	2.23	1.41	1/12	S
BD1.4F-VSD.2 2000 rpm	109Z0206	L/MBP	–	28	52	68	105	126	14	0.83	43	1.53	83	2.05	1.41	1/12	S
BD1.4F-VSD.2 4000 rpm	109Z0206	L/MBP	–	65	114	144	214	254	34	0.94	94	1.59	172	2.23	1.41	1/12	S
BD1.4F-VSD-HD 2000 rpm	109Z0250	L/MBP	–	28	52	68	105	126	14	0.83	43	1.53	83	2.05	1.41	1/12	S
BD1.4F-VSD-HD 4000 rpm	109Z0250	L/MBP	–	65	114	144	214	254	34	0.94	94	1.59	172	2.23	1.41	1/12	S
BD1.4F-VSD-HD 2000 rpm	109Z0251	L/MBP	–	28	52	68	105	126	14	0.83	43	1.53	83	2.05	1.41	1/12	S
BD1.4F-VSD-HD 4000 rpm	109Z0251	L/MBP	–	65	114	144	214	254	34	0.94	94	1.59	172	2.23	1.41	1/12	S

Please refer to the individual compressor data sheets for the complete application range.

CECOMAF Capacity [W] Tc=55°C, Tliq=55°C, Tsuc=32°C Evaporating temperature [°C]						CECOMAF LBP rating point -25°C / 55°C		CECOMAF MBP rating point -10°C / 55°C		CECOMAF HBP rating point 5°C / 55°C		Dimensions Height [mm]		Dimensions Connectors location/I.D. [mm]			Voltage range (refer to data sheet)
-35	-15	-5	0	10	15	Cooling capacity [W]	COP [W/W]	Cooling capacity [W]	COP [W/W]	Cooling capacity [W]	COP [W/W]	A (I.D.)	B (I.D.)	Suction C (I.D.)	Process D (I.D.)	Discharge E (I.D.)	
–	37	67	85	–	–	16	0.67	51	1.30	105	1.88	96.0	91.0	6.20	6.20	5.00	8.5-17 V DC
–	22	42	54	84	101	9	0.59	31	1.24	68	1.76	96.0	91.0	6.20	6.20	5.00	9.6-17, 19–34 V DC 100–240 V, 50/60 Hz
–	52	92	116	172	203	23	0.68	71	1.30	142	1.91	96.0	91.0	6.20	6.20	5.00	
–	22	42	54	84	101	9	0.59	31	1.24	68	1.76	96.0	91.0	6.50	6.50	5.00	9.6-17, 19–34 V DC 100-240 V, 50/60 Hz
–	52	92	116	172	203	23	0.68	71	1.30	142	1.91	96.0	91.0	6.50	6.50	5.00	
–	22	42	54	84	101	9	0.59	31	1.24	68	1.76	96.0	91.0	6.20	6.20	5.00	9.6-17, 19–34 V DC
–	52	92	116	172	203	23	0.68	71	1.30	142	1.91	96.0	91.0	6.20	6.20	5.00	
–	22	42	54	84	101	9	0.59	31	1.24	68	1.76	96.0	91.0	6.50	6.50	5.00	9.6-17, 19–34 V DC
–	52	92	116	172	203	23	0.68	71	1.30	142	1.91	96.0	91.0	6.50	6.50	5.00	

Compressor	Code number	Electronic unit: Variable Speed (VSD) 12–24 V DC 101N2130	Electronic unit: Variable Speed (VSD) with AC/DC converter 12–24 V DC & 100–240 V AC 101N5100	Electronic unit: Automotive 12 V DC 101N1010
BD1.4F-AUTO.3	109Z0106	–	–	✓
BD1.4F-VSD.3	109Z0209	✓	–	–
BD1.4F-VSD-HD	109Z0250	✓	–	–
BD1.4F-VSD.2 (inch connectors)	109Z0206	✓	✓	–
BD1.4F-VSD-HD (inch connectors)	109Z0251	✓	–	–

BD1.4F-AUTO.3 with 101N1010

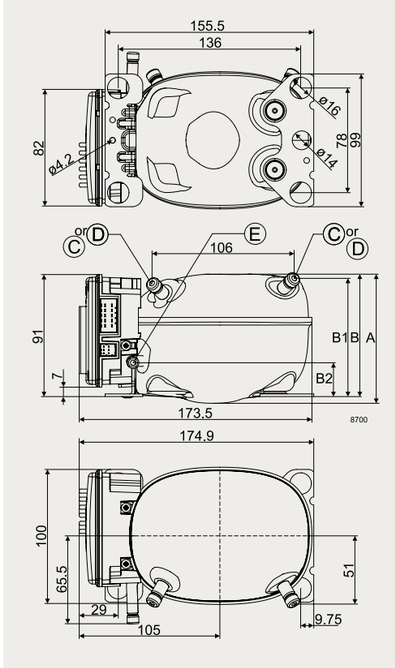

BD1.4F-VSD.3 /.2 /HD with 101N2130

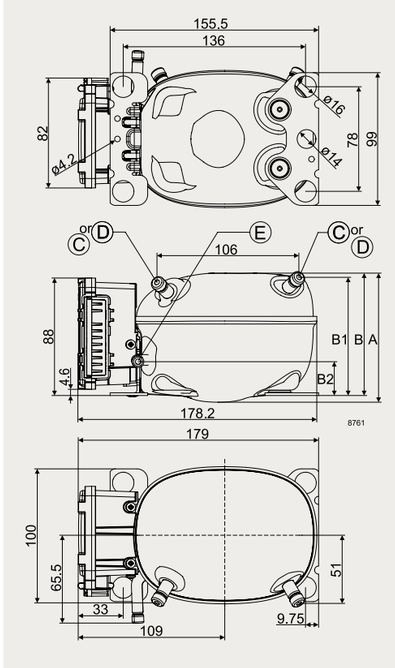

● Alternative refrigerant R1234yf, please refer to our data sheets

BD P-Housing · R134a

Compressor	Code number	Application	ASHRAE Capacity [W] Tc=54.4°C, Tliq=32.2°C, Tsuc=32.2°C Evaporating temperature [°C]						ASHRAE LBP rating point -23.3°C / 54.4°C		ASHRAE MBP rating point -6.7°C / 54.4°C		ASHRAE HBP rating point 7.2°C / 54.4°C		Displacement	Power	Compressor Cooling (refer to data sheet)
			-35	-15	-5	0	10	15	Cooling capacity [W]	COP [W/W]	Cooling capacity [W]	COP [W/W]	Cooling capacity [W]	COP [W/W]	[cm³]	[HP]	
BD35F 2000 rpm	101Z0200	L/M/HBP	–	55	90	112	169	–	33	1.36	74	1.87	135	2.51	2.00	1/12	S
BD35F 3500 rpm	101Z0200	L/M/HBP	–	87	153	–	–	–	51	1.16	125	1.74	–	–	2.00	1/12	S
BD35F 2000 rpm	101Z0204	L/M/HBP	–	55	90	112	169	–	33	1.36	74	1.87	135	2.51	2.00	1/12	S
BD35F 3500 rpm	101Z0204	L/M/HBP	–	87	153	–	–	–	51	1.16	125	1.74	–	–	2.00	1/12	S
BD35F-B 2000 rpm	101Z0205	L/M/HBP	–	55	90	112	169	–	33	1.36	74	1.87	135	2.51	2.00	1/12	S
BD35F-B 3500 rpm	101Z0205	L/M/HBP	–	87	153	–	–	–	51	1.16	125	1.74	–	–	2.00	1/12	S
BD35F-HD.2 2000 rpm	101Z0216	L/M/HBP	–	55	90	112	169	–	33	1.36	74	1.87	135	2.51	2.00	1/12	S
BD35F-HD.2 3500 rpm	101Z0216	L/M/HBP	–	87	153	–	–	–	51	1.16	125	1.74	–	–	2.00	1/12	S
BD50F 2000 rpm	101Z1220	L/M/HBP	–	69	114	141	204	–	42	1.24	94	1.72	165	2.14	2.50	1/12	S
BD50F 3500 rpm	101Z1220	L/M/HBP	–	117	194	–	–	–	72	1.18	160	1.62	–	–	2.50	1/12	S
BD50F 2000 rpm	101Z0203	L/M/HBP	–	69	114	141	204	–	42	1.24	94	1.72	165	2.14	2.50	1/12	S
BD50F 3500 rpm	101Z0203	L/M/HBP	–	117	194	–	–	–	72	1.18	160	1.62	–	–	2.50	1/12	S
BD80F 2500 rpm	101Z0280	LBP	–	108	174	–	–	–	69	1.34	144	1.65	–	–	3.00	1/12	S
BD80F 4400 rpm	101Z0280	LBP	–	170	274	–	–	–	107	1.20	227	1.49	–	–	3.00	1/10	S
BD250GH.2 2500 rpm	101Z0406	L/M/HBP	–	81	137	174	273	337	46	1.07	113	1.94	216	2.79	2.50	1/12	S
BD250GH.2 4400 rpm	101Z0406	L/M/HBP	–	158	259	321	477	574	91	1.16	214	1.77	382	2.75	2.50	1/8	S
BD250GH.2 2500 rpm	101Z0405	L/M/HBP	–	80	137	175	273	334	50	1.14	112	1.67	216	2.62	2.50	1/12	F1
BD250GH.2 4400 rpm	101Z0405	L/M/HBP	–	156	259	324	486	585	93	1.16	214	1.77	389	2.43	2.50	1/8	F1
BD250GH.2-HD 2500 rpm	101Z0410	L/M/HBP	–	80	137	175	273	334	50	1.14	112	1.67	216	2.62	2.50	1/12	F1
BD250GH.2-HD 4400 rpm	101Z0410	L/M/HBP	–	156	259	324	486	585	93	1.16	214	1.77	389	2.43	2.50	1/8	F1

Compressor	CECOMAF Capacity [W] Tc=55°C, Tliq=55°C, Tsuc=32°C Evaporating temperature [°C]						CECOMAF LBP rating point -25°C / 55°C		CECOMAF MBP rating point -10°C / 55°C		CECOMAF HBP rating point 5°C / 55°C		Dimensions Height [mm]		Dimensions Connectors location/I.D. [mm]			Voltage range (refer to data sheet)
	-35	-15	-5	0	10	15	Cooling capacity [W]	COP [W/W]	Cooling capacity [W]	COP [W/W]	Cooling capacity [W]	COP [W/W]	A (I.D.)	B (I.D.)	Suction C (I.D.)	Process D (I.D.)	Discharge E (I.D.)	
BD35F 2000 rpm	–	44	72	90	136	–	24	1.04	57	1.54	111	2.15	137.0	135.0	6.20	6.20	5.00	9.6-17, 21.3-31.5 V DC 100–240 V, 50/60 Hz 10–45 V DC solar
BD35F 3500 rpm	–	70	122	–	–	–	36	0.87	94	1.42	–	–	137.0	135.0	6.20	6.20	5.00	
BD35F 2000 rpm	–	44	72	90	136	–	24	1.04	57	1.54	111	2.15	137.0	135.0	6.50	6.50	5.00	9.6-17, 21.3-31.5 V DC 100–240 V, 50/60 Hz 10–45 V DC solar
BD35F 3500 rpm	–	70	122	–	–	–	36	0.87	94	1.42	–	–	137.0	135.0	6.50	6.50	5.00	
BD35F-B 2000 rpm	–	44	72	90	136	–	24	1.04	57	1.54	111	2.15	137.0	135.0	6.20	6.20	5.00	9.6-17, 21.3-31.5 V DC 100–240 V, 50/60 Hz
BD35F-B 3500 rpm	–	70	122	–	–	–	36	0.87	94	1.42	–	–	137.0	135.0	6.20	6.20	5.00	
BD35F-HD.2 2000 rpm	–	44	72	90	136	–	24	1.04	57	1.54	111	2.15	137.0	135.0	6.20	6.20	5.00	9.6-17, 21.3-31.5 V DC
BD35F-HD.2 3500 rpm	–	70	122	–	–	–	36	0.87	94	1.42	–	–	137.0	135.0	6.20	6.20	5.00	
BD50F 2000 rpm	–	56	92	114	165	–	30	0.95	73	1.43	138	1.87	137.0	135.0	6.20	6.20	5.00	9.6-17, 21.3-31.5 V DC 100–240 V, 50/60 Hz
BD50F 3500 rpm	–	95	157	–	–	–	52	0.92	123	1.35	–	–	137.0	135.0	6.20	6.20	5.00	
BD50F 2000 rpm	–	56	92	114	165	–	30	0.95	73	1.43	138	1.87	137.0	135.0	6.50	6.50	5.00	9.6-17, 21.3-31.5 V DC 100–240 V, 50/60 Hz
BD50F 3500 rpm	–	95	157	–	–	–	52	0.92	123	1.35	–	–	137.0	135.0	6.50	6.50	5.00	
BD80F 2500 rpm	–	87	140	–	–	–	50	1.04	112	1.40	–	–	137.0	135.0	6.20	6.20	5.00	9.6-17, 21.3-31.5 V DC
BD80F 4400 rpm	–	138	221	–	–	–	78	0.94	176	1.27	–	–	137.0	135.0	6.20	6.20	5.00	
BD250GH.2 2500 rpm	–	65	110	140	218	270	32	0.77	86	1.57	176	2.36	137.0	135.0	6.20	6.20	5.00	9.6-17, 21.3-31.5 V DC
BD250GH.2 4400 rpm	–	128	209	259	383	460	62	0.85	166	1.43	316	2.31	137.0	135.0	6.20	6.20	5.00	
BD250GH.2 2500 rpm	–	64	110	141	219	268	37	0.88	85	1.33	177	2.19	137.0	135.0	6.20	6.20	5.00	32–60 V DC
BD250GH.2 4400 rpm	–	126	209	261	391	470	67	0.88	165	1.44	321	2.10	137.0	135.0	6.20	6.20	5.00	
BD250GH.2-HD 2500 rpm	–	64	110	141	219	268	37	0.88	85	1.33	177	2.19	137.0	135.0	6.20	6.20	5.00	32–60 V DC
BD250GH.2-HD 4400 rpm	–	126	209	261	391	470	67	0.88	165	1.44	321	2.10	137.0	135.0	6.20	6.20	5.00	

-HD = optimized for rough vehicle motions
-B = optimized for rough vehicle motions, especially in buses

Please refer to the individual compressor data sheets for the complete application range.

Compressor	Electronic unit: Code number	Standard 12–24 V DC 101N0242	High Speed 12–24 V DC 101N0390	AEO 12–24 V DC 101N0340	Solar 10–45 V DC 101N0420	AC/DC converter 12–24 V DC & 100–240 V AC 101N0510	Automotive 12–24 V DC 101N0680	Telecom 48 V DC 101N0732
BD35F	101Z0200	✓	–	✓	✓	✓	✓	–
BD35F (inch con.)	101Z0204	✓	–	✓	✓	✓	✓	–
BD35F-B	101Z0205	✓	–	✓	–	✓	✓	–
BD35F-HD.2	101Z0216	✓	–	✓	–	–	✓	–
BD50F	101Z1220	✓	–	✓	–	✓	✓	–
BD50F (inch con.)	101Z0203	✓	–	✓	–	✓	✓	–
BD80F	101Z0280	–	✓	–	–	–	–	–
BD250GH.2	101Z0406	–	✓	–	–	–	–	–
BD250GH.2 (48V)	101Z0405	–	–	–	–	–	–	✓
BD250GH.2-HD (48V)	101Z0410	–	–	–	–	–	–	✓

BD P-Housing with 101N0242

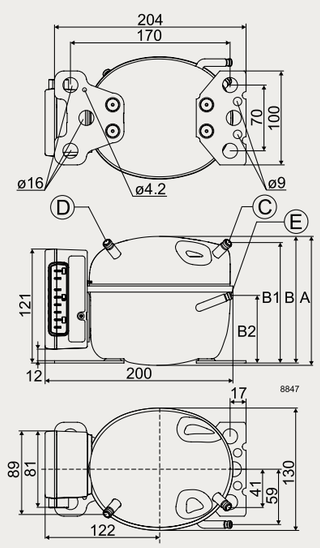

BD P-Housing with 101N0390

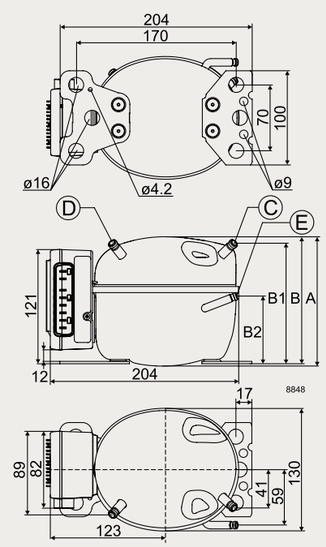

BD P-Housing with 101N0732

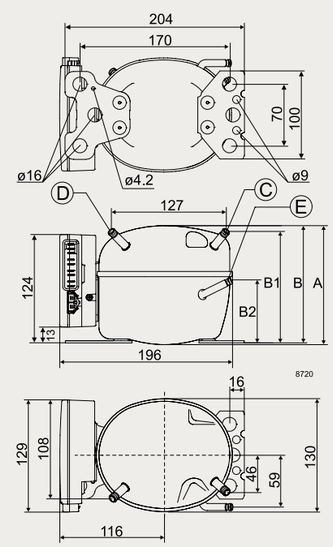

BD P-Housing · R600a · R290

Compressor	Code number	Application	ASHRAE Capacity [W] Tc=54.4°C, Tliq=32.2°C, Tsuc=32.2°C Evaporating temperature [°C]						ASHRAE LBP rating point -23.3°C / 54.4°C		MBP rating point -6.7°C / 54.4°C		HBP rating point 7.2°C / 54.4°C		Displacement	Power	Compressor Cooling (refer to data sheet)
			-35	-15	-5	0	10	15	Cooling capacity	COP	Cooling capacity	COP	Cooling capacity	COP			
									[W]	[W/W]	[W]	[W/W]	[W]	[W/W]	[cm³]	[HP]	
BD35K 2000 rpm	101Z0211	L/M/HBP	–	48	78	97	142	–	29	1.27	65	1.86	115	2.53	3.00	1/12	S
BD35K 3500 rpm	101Z0211	L/M/HBP	–	79	130	–	–	–	49	1.13	108	1.67	–	–	3.00	1/12	S
BD35K-B 2000 rpm	101Z0214	L/M/HBP	–	48	78	97	142	–	29	1.27	65	1.86	115	2.53	3.00	1/12	S
BD35K-B 3500 rpm	101Z0214	L/M/HBP	–	79	130	–	–	–	49	1.13	108	1.67	–	–	3.00	1/12	S
BD50K 2500 rpm	101Z0213	L/M/HBP	–	53	89	112	168	–	32	1.17	74	1.94	136	2.76	3.00	1/12	S
BD50K 4400 rpm	101Z0213	L/M/HBP	–	94	158	198	296	–	57	1.08	131	1.59	240	2.26	3.00	1/12	S
BD80CN 2000 rpm	101Z0403	L/MBP	23	78	122	149	–	–	51	1.40	102	1.92	–	–	2.00	1/12	S
BD80CN 3500 rpm	101Z0403	L/MBP	44	137	219	–	–	–	89	1.14	182	1.84	–	–	2.00	1/12	S
BD100CN 2500 rpm	101Z0401	L/MBP	10	109	158	190	–	–	73	1.34	133	1.77	–	–	2.00	1/12	S
BD100CN 4400 rpm	101Z0401	L/MBP	58	176	265	–	–	–	119	1.26	222	1.61	–	–	2.00	1/8	S

CECOMAF Capacity [W] Tc=55°C, Tliq=55°C, Tsuc=32°C Evaporating temperature [°C]						CECOMAF LBP rating point -25°C / 55°C		MBP rating point -10°C / 55°C		HBP rating point 5°C / 55°C		Dimensions Height [mm]		Connectors location/I.D. [mm]			Voltage range (refer to data sheet)
-35	-15	-5	0	10	15	Cooling capacity	COP	Cooling capacity	COP	Cooling capacity	COP			Suction	Process	Discharge	
						[W]	[W/W]	[W]	[W/W]	[W]	[W/W]	A (I.D.)	B (I.D.)	C (I.D.)	D (I.D.)	E (I.D.)	
–	40	64	79	116	–	21	0.97	51	1.56	96	2.18	137.0	135.0	6.20	6.20	5.00	9.6-17, 21.3-31.5 V DC 100–240 V, 50/60 Hz 10–45 V DC solar
–	65	106	–	–	–	36	0.87	84	1.39	–	–	137.0	135.0	6.20	6.20	5.00	
–	40	64	79	116	–	21	0.97	51	1.56	96	2.18	137.0	135.0	6.20	6.20	5.00	9.6-17, 21.3-31.5 V DC 100–240 V, 50/60 Hz 10–45 V DC solar
–	65	106	–	–	–	36	0.87	84	1.39	–	–	137.0	135.0	6.20	6.20	5.00	
–	44	73	92	137	–	24	0.89	57	1.60	113	2.37	137.0	135.0	6.20	6.20	5.00	9.6-17, 21.3-31.5 V DC
–	77	129	162	242	–	42	0.84	101	1.32	199	1.94	137.0	135.0	6.20	6.20	5.00	
18	63	98	120	–	–	37	1.07	80	1.61	144	2.20	137.0	135.0	6.20	6.20	5.00	9.6-17, 21.3-31.5 V DC 100–240 Hz, 50/60 Hz 10–45 V DC solar
36	111	177	–	–	–	66	0.88	141	1.45	–	–	137.0	135.0	6.20	6.20	5.00	
7	88	128	154	–	–	52	0.99	107	1.49	186	2.08	137.0	135.0	6.20	6.20	5.00	9.6-17, 21.3-31.5 V DC
47	142	214	–	–	–	88	0.98	175	1.35	–	–	137.0	135.0	6.20	6.20	5.00	

K → R600a

CN → R290

-B = optimized for rough vehicle motions, especially in buses Please refer to the individual compressor data sheets for the complete application range.

Compressor	Electronic units						
	Code number	Standard 12–24 V DC 101N0242	High Speed 12–24 V DC 101N0390	AEO 12–24 V DC 101N0340	Solar 10–45 V DC 101N0420	AC/DC converter 12–24 V DC & 100–240 V AC 101N0510	Automotive 12–24 V DC 101N0680
BD35K /-B	101Z0211 /214	✓	–	✓	✓	✓	✓
BD50K	101Z0213	–	✓	–	–	–	–
BD80CN	101Z0403	✓	–	✓	✓	✓	✓
BD100CN	101Z0401	–	✓	–	–	–	–

BD P-Housing with 101N0242

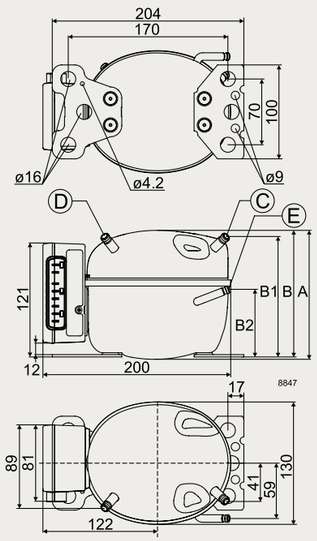

BD P-Housing with 101N0390

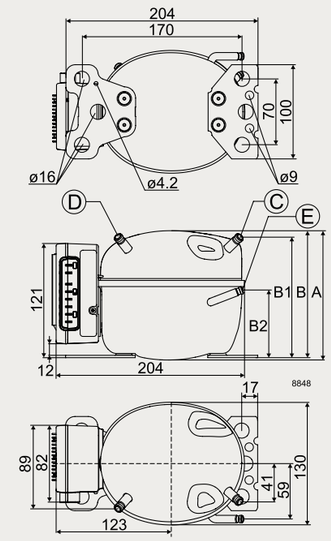

NATURAL REFRIGERANT

BD T-Housing · R134a · R404A/R507

Compressor	Code number	Application	ASHRAE Capacity [W] Tc=54.4°C, Tliq=32.2°C, Tsuc=32.2°C Evaporating temperature [°C]						ASHRAE LBP rating point -23.3°C / 54.4°C		MBP rating point -6.7°C / 54.4°C		HBP rating point 7.2°C / 54.4°C		Displacement	Power	Compressor Cooling (refer to data sheet)	CECOMAF Capacity [W] Tc=55°C, Tliq=55°C, Tsuc=32°C Evaporating temperature [°C]						CECOMAF LBP rating point -25°C / 55°C		MBP rating point -10°C / 55°C		HBP rating point 5°C / 55°C		Dimensions Height [mm]		Connectors location/I.D. [mm]			Voltage range (refer to data sheet)
			-35	-15	-5	0	10	15	Cooling capacity	COP	Cooling capacity	COP	Cooling capacity	COP				-35	-15	-5	0	10	15	Cooling capacity	COP	Cooling capacity	COP	Cooling capacity	COP			Suction	Process	Discharge	
									[W]	[W/W]	[W]	[W/W]	[W]	[W/W]	[cm³]	[HP]								[W]	[W/W]	[W]	[W/W]	[W]	[W/W]	A (I.D.)	B (I.D.)	C (I.D.)	D (I.D.)	E (I.D.)	
BD350GH (12V) 2500 rpm	102Z3015	L/M/HBP	–	188	302	375	558	670	120	1.26	250	1.65	447	2.20	5.08	1/7	F1	–	152	244	302	448	538	88	0.97	194	1.38	370	1.89	173.0	169.0	6.20	6.20	5.00	9.6-17 V DC
BD350GH (12V) 4000 rpm	102Z3015	L/M/HBP	–	273	440	546	814	979	173	1.16	364	1.47	653	1.94	5.08	1/5	F1	–	220	355	440	654	786	126	0.90	282	1.24	540	1.66	173.0	169.0	6.20	6.20	5.00	
BD350GH (24V) 2500 rpm	102Z3016	L/M/HBP	–	182	292	363	539	648	116	1.42	242	1.87	433	2.49	5.08	1/8	F1	–	147	236	292	434	520	85	1.09	188	1.56	358	2.13	173.0	169.0	6.20	6.20	5.00	19-31.5 V DC
BD350GH (24V) 4000 rpm	102Z3016	L/M/HBP	–	273	440	546	814	979	173	1.34	364	1.73	653	2.29	5.08	1/5	F1	–	220	355	440	654	786	126	1.03	282	1.45	540	1.96	173.0	169.0	6.20	6.20	5.00	
BD350GH (24V) 2500 rpm*	102Z3039	L/M/HBP	–	182	292	363	539	648	116	1.42	242	1.87	433	2.49	5.08	1/8	F1	–	147	236	292	434	520	85	1.09	188	1.56	358	2.13	173.0	169.0	6.20	6.20	5.00	19-31.5 V DC
BD350GH (24V) 4000 rpm*	102Z3039	L/M/HBP	–	273	440	546	814	979	173	1.34	364	1.73	653	2.29	5.08	1/5	F1	–	220	355	440	654	786	126	1.03	282	1.45	540	1.96	173.0	169.0	6.20	6.20	5.00	
BD350GH (48V) 2500 rpm	102Z3031	L/M/HBP	–	182	292	363	539	648	116	1.30	242	1.77	433	2.41	5.08	1/8	F1	–	147	236	292	434	520	85	0.99	188	1.48	358	2.06	173.0	169.0	6.20	6.20	5.00	32-60 V DC
BD350GH (48V) 4000 rpm	102Z3031	L/M/HBP	–	267	434	541	808	973	167	1.21	359	1.59	647	2.13	5.08	1/5	F1	–	216	350	436	650	781	121	0.92	277	1.33	535	1.82	173.0	169.0	6.20	6.20	5.00	
BD220CL 2500 rpm	102Z3020	L/M/HBP	69	241	375	–	–	–	156	1.14	300	1.50	–	–	3.86	1/7	S	51	178	275	–	–	–	105	0.80	223	1.20	–	–	173.0	169.0	6.20	6.20	5.00	9.6-17 V DC
BD220CL 4000 rpm	102Z3020	L/M/HBP	108	378	589	–	–	–	245	1.19	472	1.47	–	–	3.86	1/4	S	80	279	433	–	–	–	164	0.84	351	1.18	–	–	173.0	169.0	6.20	6.20	5.00	

GH → R134a

CL → R404A/R507

* = optimized for rough vehicle motions

Please refer to the individual compressor data sheets for the complete application range.

Compressor	Electronic unit				
	Code number	101N08xxx 12 V DC 101N0820+0800 (alt.: 101N0830)	101N8xxx 24 V DC 101N0820+0810	101N07xx 24 V DC 101N0715	Telecom 48 V DC 101N0720
BD350GH (12V)	102Z3015	✓+✓	–	–	–
BD350GH (24V)	102Z3016	–	✓+✓	✓	–
BD350GH (24V)*	102Z3039	–	–	✓	–
BD350GH (48V)	102Z3031	–	–	–	✓
BD220CL	102Z3020	✓+✓	–	–	–

BD T-Housing with 101N0830

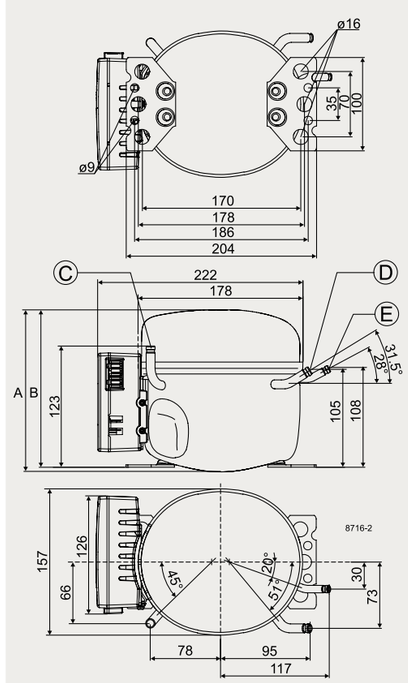

BD T-Housing with 101N0715

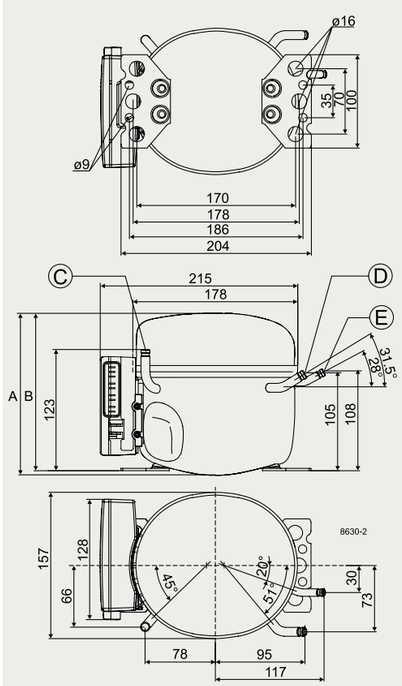

BD T-Housing with 101N0720

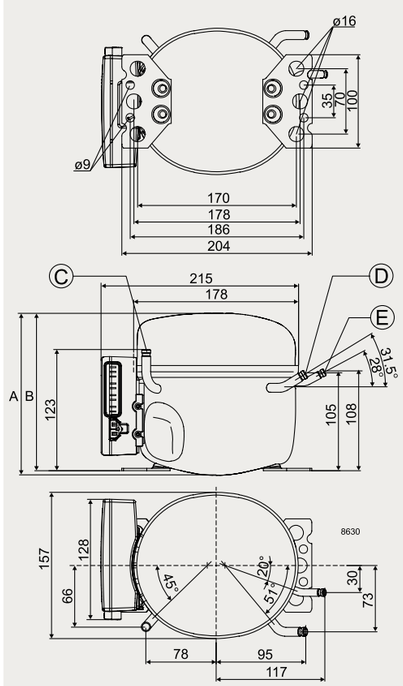

CODE NUMBERS

BD35/50/80F | BD250GH.2
BD35F-HD.2 | BD35F-B
BD35/50K | BD80/100CN

Compressors	Code number	Description
BD35F	101Z0200	standard compressor, mm tube connectors
BD35F inch	101Z0204	same as 101Z0200, inch tube connectors
BD35F-B	101Z0205	optimized for rough vehicle motions (especially in buses), mm tube connectors
BD35F-HD.2	101Z0216	heavy duty version which can handle extreme vibrations, mm tube connectors
BD35K (R600a)	101Z0211	mainly solar applications, mm tube connectors
BD35K-B (R600a)	101Z0214	optimized for rough vehicle motions (especially in buses), other HD applications, mm tube connectors
BD50K (R600a)	101Z0213	standard compressor, mm tube connectors
BD50F	101Z1220	standard compressor, mm tube connectors
BD50F inch	101Z0203	same as 101Z1220, inch tube connectors
BD80F	101Z0280	standard compressor, mm tube connectors
BD250GH.2	101Z0406	mm tube connectors, HBP compressor
BD80CN (R290)	101Z0403	mm tube connectors
BD100CN (R290)	101Z0401	mm tube connectors

Electronic Unit Single Pack	Code number	Description
Standard, for gateway or sensors refer to next page	101N0242	for BD35F/BD50F/BD35K, speed setting, battery protection, ECO function, communication interface for PC software Tool4Cool®, high starting torque (HST), reduced EMI and leakage current
AEO	101N0340	for BD35F/BD50F/BD80CN, Adaptive Energy Optimization
High speed	101N0390	for BD80F/BD250GH.2/etc., Adaptive Energy Optimization, speed setting, battery protection
Solar 10-45 V DC	101N0420	for BD35F/BD35K, optimized for direct solar panel operation, speed setting
AC/DC converter	101N0510	for BD35F/BD50F/BD35K, speed setting, battery protection, integrated AC/DC converter
Automotive, for gateway or sensors refer to next page	101N0680	for BD35F/BD50F, speed setting, battery protection, ECO function, communication interface for PC software Tool4Cool®, high starting torque (HST), significant reduced EMI and leakage current
Remote kit with cable	105N9100	bracket, cover, 750 mm cable with two plugs
Remote kit without cable	105N9210	bracket, cover, two plugs

Electronic Unit I – Pack	Code number	Description
Standard, for gateway or sensors refer to next page	101N0243	for BD35F/BD50F/BD35K, speed setting, battery protection, ECO function, communication interface for PC software Tool4Cool®, high starting torque (HST), reduced EMI and leakage current, 30 pcs.
AEO	101N0341	for BD35F/BD50F/BD80CN, Adaptive Energy Optimization, 30 pcs.
High speed	101N0391	for BD80F/BD250GH.2/etc., Adaptive Energy Optimization, speed setting, battery protection, 30 pcs.
Solar 10-45 V DC	101N0421	for BD35F/BD35K, optimized for direct solar panel operation, speed setting, 30 pcs.
AC/DC converter	101N0511	for BD35F/BD50F/BD35K, speed setting, battery protection, integrated AC/DC converter, 28 pcs.
Automotive, for gateway or sensors refer to next page	101N0681	for BD35F/BD50F, speed setting, battery protection, ECO function, communication interface for PC software Tool4Cool®, high starting torque (HST), significant reduced EMI and leakage current, 30 pcs.
Remote kit without cable	105N9200	bracket, cover and two plugs, 200 pcs.

TOOL4COOL®

SOFTWARE DOWNLOAD

Tool4Cool® LabEdition

www.secop.com/tool4cool

CODE NUMBERS
BD250GH.2 | BD350GH WITH 101N07XX SERIES CONTROLLERS

	Item	Code number	Description
Compressors	BD250GH.2 48 V DC supply	101Z0405	for telecommunication applications (battery cooling)
	BD250GH.2-HD 48 V DC supply	101Z0410	for cooling and comfort cooling in trucks and vans
	BD350GH 24 V DC supply	102Z3016	for cooling and comfort cooling in trucks and vans
	BD350GH 24 V DC supply	102Z3039	for cooling and comfort cooling in trucks and vans
	BD350GH 48 V DC supply	101Z3031	for telecommunication applications (battery cooling)
Single-Pack	Electronic unit 24 V DC	101N0715	for BD350GH (24 V), 40/60 W fan output, ECO function
	Electronic unit 48 V DC	101N0732	for BD250GH.2 (48 V), 60 W fan output, ECO function
	Electronic unit 48 V DC	101N0720	for BD350GH (48 V), 60 W fan output, ECO function
	48 V DC line cord, 900 mm, 6mm²	105N9542	accessories
	48 V DC line cord, 2000 mm, 6 mm²	105N9540	accessories
	48 V DC line cord, 5000 mm, 6 mm²	105N9538	accessories
	Temperature sensor, 470 mm, spade connectors	105N9612	accessories
	Temperature sensor, 1000 mm, spade connectors	105N9614	accessories
	Temperature sensor, 1500 mm, spade connectors	105N9616	accessories
	Secop One Wire/LIN gateway with cables & driver	105N9501	accessories
Industrial-Pack (I-Pack)	Electronic unit 24 V DC	101N0714	for BD350GH (24 V), 36 pcs.
	Electronic unit 48 V DC	101N0733	for BD250GH.2 (48 V), 36 pcs.
	Electronic unit 48 V DC	101N0721	for BD350GH (48 V), 36 pcs.
	Communication cable, 1500 mm, AMP connector	105N9545	100 pcs.
	Communication cable, 3000 mm, AMP connector	105N9547	50 pcs.
	48 V DC line cord, 900 mm, 6 mm²	105N9543	36 pcs.
	48 V DC line cord, 2000 mm, 6 mm²	105N9541	36 pcs.
	48 V DC line cord, 5000 mm, 6 mm²	105N9539	36 pcs.
	Temperature sensor, 470 mm, spade connectors	105N9613	200 pcs.
	Temperature sensor, 1000 mm, spade connectors	105N9615	100 pcs.
	Temperature sensor, 1500 mm, spade connectors	105N9617	100 pcs.
	Temperature sensor, 400 mm, AMP connector	105N9611	200 pcs.

TOOL4COOL®

SOFTWARE DOWNLOAD

Tool4Cool® LabEdition

www.secop.com/tool4cool

CODE NUMBERS
BD350GH | BD220CL WITH 101N08XX SERIES CONTROLLERS

	Item	Code number	Description
Compressors	BD350GH 12 V DC supply	102Z3015	for cooling and comfort cooling in trucks and vans
	BD350GH 24 V DC supply	102Z3016	for cooling and comfort cooling in trucks and vans
	BD220CL 12 V DC supply	102Z3020	for mobile refrigeration units (boxes, containers, trolleys)
Single-Pack	Electronic unit (compressor module) 12 V DC	101N0800	electronic module (to be used together with 101N0820)
	Electronic unit (compressor module) 24 V DC	101N0810	electronic module (to be used together with 101N0820)
	Electronic unit (application module) 12 & 24 V DC	101N0820	electronic module (to be used together with 101N800/810)
	Electronic unit (single solution) 12 V DC	101N0830	electronic unit (no fan control)
	Temperature sensor, 470 mm, spade connectors	105N9612	accessories
	Temperature sensor, 1000 mm, spade connectors	105N9614	accessories
	Temperature sensor, 1500 mm, spade connectors	105N9616	accessories
	Secop One Wire/LIN gateway with cables & driver	105N9501	accessories
	One Wire/LIN gateway communication cable	105N9524	accessories (for 101N8xxx series)
Industrial-Pack (I-Pack)	Electronic unit (compressor module) 12 V DC	101N0801	30 pcs.
	Electronic unit (compressor module) 24 V DC	101N0811	30 pcs.
	Electronic unit (application module) 12 & 24 V DC	101N0821	30 pcs.
	Electronic unit (single solution) 12 V DC	101N0831	30 pcs.
	Compressor communication cable assembly 3000 mm	105N9554	45 pcs.
	Temperature sensor, 470 mm, spade connectors	105N9613	200 pcs.
	Temperature sensor, 1000 mm, spade connectors	105N9615	100 pcs.
	Temperature sensor, 1500 mm, spade connectors	105N9617	100 pcs.
	Display cable assembly without fuse 1500 mm	105N9557	65 pcs.
	Display cable assembly without fuse 3000 mm	105N9558	35 pcs.

TOOL4COOL®

SOFTWARE DOWNLOAD

Tool4Cool® LabEdition

www.secop.com/tool4cool

CODE NUMBERS

BD1.4F-AUTO.3
BD1.4F-VSD.2/.3
BD1.4F-VSD-HD

Compressors	Code number	Description
BD1.4F-AUTO.3 mm	109Z0106	automotive compressor, mm tube connectors
BD1.4F-VSD.3 mm	109Z0209	variable speed drive compressor, mm tube connectors
BD1.4F-VSD.2 inch	109Z0206	similar as 109Z0209, inch tube connectors
BD1.4F-VSD-HD mm	109Z0250	variable speed drive compressor (heavy duty), mm tube connectors, for trucks and buses
BD1.4F-VSD-HD inch	109Z0251	same as 109Z0250, inch tube connectors, for trucks and buses

Electronic Single Pack	Code number	Description
Automotive	101N1010	for BD1.4F-AUTO.3, battery protection, 12 V, fixed speed (3,000 rpm)
Variable Speed (VSD)	101N2130	for BD1.4F-VSD.2/.3, BD1.4F-VSD-HD, speed setting, battery protection, 12/24 V, ECO function
VSD with AC/DC converter	101N5100	for BD1.4F-VSD.2, speed setting, battery protection, 12/24 V DC & 100 – 240 V AC, ECO function

Electronic I – Pack	Code number	Description
Automotive	101N1011	for BD1.4F-AUTO.3, battery protection, 12 V, fixed speed (3,000 rpm), 30 pcs.
Variable Speed (VSD)	101N2131	for BD1.4F-VSD.2/.3, BD1.4F-VSD-HD, speed setting, battery protection, 12/24 V, ECO function, 30 pcs.
VSD with AC/DC converter	101N5101	for BD1.4F-VSD.2, speed setting, battery protection, 12/24 V DC & 100-240 V AC, ECO function, 24 pcs.

TOOL4COOL®

SOFTWARE DOWNLOAD

Tool4Cool® LabEdition

www.secop.com/tool4cool

APPLICATION EXAMPLES

2

Secop BD compressors mean: extraordinary performance at minimum power consumption, superbly silent running, reliable operation even when tilted up to 30 degrees, problem-free operation at 12/24/48 volts and more than 40 years' of experience in mobile refrigeration.

Transport stable, speed/capacity stable, multifunctional electronic, silent, high COP and compact design.

BD COMPRESSORS BRING COMFORT AT WORK AND LEISURE

The direct current compressors BD35F/50F/80F for 12/24 V DC power supply can be used in mobile refrigerators and freezers with refrigerant R134a.

The BD250GH.2 and the BD350GH compressors in 12/24 or 48 V DC versions are R134a HBP compressors used for mobile spot cooling systems or telecommunication cooling.

BD35/50K (R600a) and BD80/100CN (R290) are compressors that use HFC-free refrigerants.

All compressors are equipped with an electronic unit with built-in protection against shortages, operation outside temperature limits, and destructive battery discharge.

The advanced micro-controller technology enables new functions such as an electronic thermostat, fan speed, ECO function, alarm log, event log, and software main switch.

Second to none – even cooling "without power supply"
Thanks to an extensive voltage rate the BD compressors are ideal for operation by solar power.

The exceptionally low-starting current eliminates the need for batteries if an ice bank is used for energy storage. When storing the converted sun energy in ice packs, the cabinet can be kept at desired temperatures both night and day.

This feature offers numerous uses in areas without power supply such as for the storage and transportation of vaccines, drugs, ice cream stands in holiday resorts, food preservation under off road conditions, and refrigerators in boats to name only a few.

BD1.4F-AUTO.3 (BD Micro)
The BD1.4F-AUTO.3 is the latest generation of BD Micro compressors specially designed for high-end car minibars.

It features an optimized noise level and is also approved for refrigerant R1234yf.

BD1.4F-VSD.3 (BD Micro Variable Speed Drive)
The BD1.4F-VSD.3 (new BD Micro generation with optimized noise level and approved for refrigerant R1234yf) is 60 % smaller than previous models and weighs in at only 2.3 kilograms.

Perfect for 10–30 liter in car, van, boat cabinets, or portable boxes that need to fit into tight spaces without compromising storage space.

This powerhouse of a compressor makes it easier than ever to provide leading-class mobile refrigerators.

Enabling the variable speed function increases the system's COP. Low energy consumption is good for car, boat, or van batteries as well as the environment. The optimized, low-noise motor ensures outstanding performance for offering that extra degree of luxury on the go.

The electronic thermostat (NTC sensor support) provides an accurate temperature while the failure detection allows fast fault diagnosis. The computer interface makes it easier for customization.

BD35F-HD.2, BD250GH.2-HD, BD1.4F-VSD-HD (Heavy Duty)
BD35F-HD.2, BD250GH.2-HD (48V) and BD1.4F-VSD-HD and are new versions which can handle extreme vibrations.

BD35F-B, BD35K-B (Bus-optimized)
The BD35F-B and the BD35K-B are special versions optimized for rough vehicle motions, especially in buses.

BD50K (Isobutane, R600a)
The new BD50K offers 25% additional cooling capacity compared to the BD35K compressor.

Applications	Compressors														
	BD1.4F-AUTO.3	BD1.4F-VSD.2	BD1.4F-VSD-HD	BD35F	BD35F-B	BD35F-HD.2	BD35K/-B	BD50K	BD50F	BD80F	BD80CN	BD100CN	BD250GH.2	BD350GH	BD220CL
Truck refrigerators	–	✓	✓	✓	–	✓	✓	✓	✓	–	✓	–	–	–	–
Boat refrigerators	–	✓	–	✓	–	–	✓	✓	✓	✓	✓	✓	–	–	–
Bus refrigerators	–	✓	–	✓	✓	–	✓	✓	–	–	✓	–	–	–	–
Portable boxes	–	✓	–	✓	–	–	✓	✓	✓	✓	–	–	–	–	–
Car minbars (high end)	✓	✓	–	✓	–	–	✓	–	–	–	–	–	–	–	–
Car minibars (SUV, MPV)	–	✓	–	✓	–	–	✓	–	–	–	–	–	–	–	–
Spot cooling (e.g. trucks)	–	–	–	–	–	–	–	–	–	–	–	–	✓	✓	–
Van boxes	–	–	–	–	–	–	–	–	✓	✓	✓	✓	✓	✓	✓
Battery cooling	–	–	–	–	–	–	–	–	–	–	–	–	✓	✓	–
Solar cabinets	–	–	–	✓	–	–	✓	✓	✓	✓	✓	✓	–	–	–

COMFORT COOLING IN TRUCKS

In the USA, Australia, Asia, South America, and Europe many of the heavy trucks are equipped with sleeping compartments. The cab gives the driver the opportunity to respond to spontaneous transport tasks and to plan his own work day.

To ensure a good night sleep it is important to keep the temperature and humidity in the cabin at a comfortable level also during night time when the engine is shut off and the air conditioning system is not running. Many states and countries have abandoned idle cooling, meaning the diesel engine is not allowed to run when the truck is parked.

To keep a comfortable temperature during the hot summer nights, a small DC-driven comfort cooler system could be the solution. It cools down the cabin and at the same time lowers the humidity to a comfortable level.

BD250GH.2 and BD350GH compressors are tailored to workplaces where driving is required.

They are universal for 12 V and 24 V DC power supplies. In addition, they are unsurpassed when it comes to tolerating changeable climatic conditions and vibrations under harsh road conditions all over the world.

BD compressors cover a capacity range from 180 W to 850 W at Te +15 °C and are specially designed for high back pressure applications.

The compressors are controlled by an electronic unit that also offers protection against overload and hazardous battery discharge. The unit also features an internal voltage recorder as well as calibration to the applied voltage (compressor monitoring) plus many other smart features in order to save energy and maximize performance.

Features	Benefits
→ Silent operation	→ The driver can sleep without being disturbed by a noisy compressor.
→ High efficiency. Low current consumption	→ Energy-saving. Less battery power needed to cool overnight.
→ Variable speed/capacity	→ Energy savings. Adapts speed to cooling needs.
→ Direct 12 V/24 V DC power supply	→ Same compressor can be used globally. One product covers the world.
→ Modbus communication connection	→ Customers can make their own control box including control of the BD compressor.
→ Electronic thermostat	→ Cost savings. No extra thermostat needed. Fewer components and failure modes.
→ Alarm & event logs	→ Makes identifying errors fast and is easy to service. Lower service costs.
→ Fan speed control 40 – 100 %. Start/stop delays	→ Less noise during night. Fewer components, fewer costs, less wiring, fewer installation costs.
→ Advanced battery protection function	→ Safety. The battery will never be drained. Truck can be started safely every time.
→ No APU necessary	→ Runs directly on battery. No additional cost for an auxiliary power unit. Lower costs and failure modes.
→ Transport stable	→ Designed to resist vibrations, shocks, and bumping roads. Design lifetime 10 years. Lower service costs.

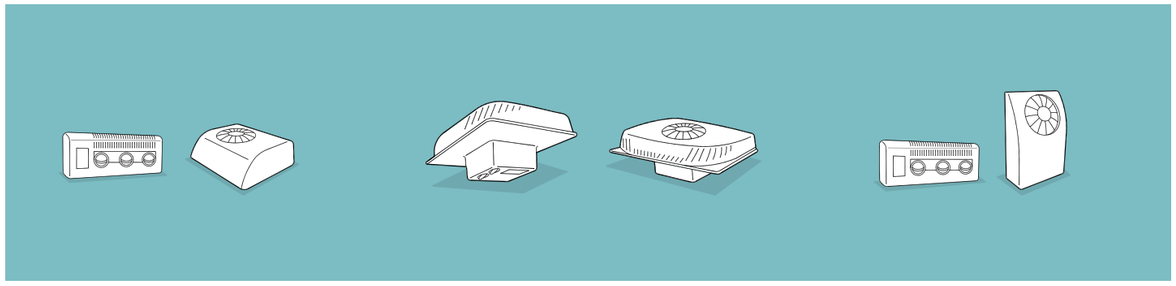

COOLING IN MARITIME APPLIANCES

The BD compressor series is specially designed for refrigeration in boat applications. A sturdy design enables it to resist vibrations, hard impacts, and heavy seas.

BD compressors cover a capacity range from 20 to 180 Watt. They are ideal for low and medium back pressure applications and refrigerator sizes up to 180 liters and freezers up to 90 liters.

The compressor's capacity can be adjusted manually. A special version of the electronic unit will adapt the capacity of the compressor automatically (AEO) to the actual load on the refrigeration system. The algorithm will adjust the speed of the compressor to achieve a running time of approximately 30 minutes. This is the most energy efficient way to operate the compressor.

The BD1.4F-VSD.3 and BD35F/BD50F (with electronic unit 101N0242) offer an ECO function which adapts the speed of the compressor so that it runs at an optimal level.

Furthermore, these functions protect the compressor from short cycling in low load situations and also reduce the number of starts and thus saving battery life. An optional LED (diode) will flash and the following faults will be indicated by a blinking light:

low battery voltage, fan overload, minimum speed exceeded, thermal cut-out, motor start error.

The new BD1.4F-VSD.3 has additional features such as fan speed control, built in electronic thermostat, communication interface which makes programming the controller easy without requiring resistors or extra wiring.

The electronic unit provides protection against electromagnetic interference (EMI) which will allow communication and navigation equipment to work unproblematically without any disturbance.

Features	Benefits
→ Silent operation	→ No compressor noise at night when sleeping next to the refrigerator in the boat.
→ High efficiency. Low current consumption	→ Energy-saving. Operates on a smaller battery.
→ Variable speed/capacity	→ Energy savings. Adapts speed to cooling needs.
→ Direct 12 V/24 V DC power supply	→ Same compressor can be used globally. One product covers the world.
→ Modbus communication connection	→ Customized settings and fast programming on the production line are possible.
→ Electronic thermostat	→ Cost savings. No extra thermostat needed. Fewer components and failure modes.
→ Alarm & event logs	→ Makes identifying errors fast and is easy to service. Lower service costs.
→ Fan speed control 40 – 100 %. Start/stop delays	→ Less noise during night. Fewer components, fewer costs, less wiring, fewer installation costs.
→ Advanced battery protection function	→ Safety. The battery will never be drained to a dangerously low level.
→ AC/DC module available as option	→ When staying in a port the refrigerator can be powered by shore power (100–240 V AC, 50/60 Hz).
→ Transport stable	→ Designed to resist conditions on the sea such as vibrations, shocks, and inclement weather. Design lifetime 10 year. Lower service costs.

COOLING IN RECREATIONAL VEHICLES (RV)

Everybody wants to bring modern comfort with them when going on vacation or a weekend tour.

BD compressors make it possible to go on vacation in recreational vehicles all over the world and to bring along a refrigerator and a freezer – even in "off grid" places without power supply. The compressors are universal for 12 and 24 V DC power supply and can be used in recreational vehicles like luxury coaches, diesel motor homes, mini motor homes, travel trailers, and fifth wheels, truck campers, etc. They are unsurpassed when it comes to tolerating changeable climatic conditions and vibrations under harsh road conditions.

The BD1.4F-VSD.3, BD35F, BD50F and BD80F compressors cover a capacity range from 20 to 180 W. They are ideal for low and medium back pressure applications and refrigerator sizes up to 180 liters and freezers up to 90 liters.

A special version of the electronic unit adapts the capacity of the compressor automatically (AEO) to the actual load on the refrigeration system. The algorithm adjusts the speed of the compressor to achieve a running time of approximately 30 minutes. This is the most energy efficient way to operate the compressor. The BD1.4F-VSD.3 and BD35F/BD50F (with electronic unit 101N0242) offer an ECO function which adapts the speed of the compressor so that it runs at an optimal level. It has additional features such as fan speed control, built in electronic thermostat, communication interface which makes programming the controller easy, without resistors and extra wiring.

The compressors are controlled by an electronic unit that also offers protection against overload and hazardous battery discharge. The unit also features an internal voltage recorder as well as calibration to the applied voltage (compressor monitoring).

Features	Benefits
→ Silent operation	→ No compressor noise during night when sleeping next to the refrigerator in the RV.
→ High efficiency. Low current consumption	→ Energy-saving. Operates on a smaller battery. Three times less energy consumption compared to absorption and fast pull down.
→ Variable speed/capacity	→ Energy savings. Adapts speed to cooling requirement.
→ Direct 12 V/24 V DC power supply	→ Same compressor can be used globally. One product covers the world.
→ Modbus communication connection	→ Customized settings and fast programming on the production line are possible.
→ Electronic thermostat	→ Cost savings. No extra thermostat needed. Fewer components and failure modes.
→ Alarm & event logs	→ Makes identifying errors fast and is easy to service. Reduced service costs.
→ Fan speed control 40 – 100 %. Start/stop delays	→ Less noise during night. Fewer components, fewer costs, less wiring, fewer installation costs.
→ Advanced battery protection function	→ Safety. The battery will never be drained to a dangerously low level.
→ Transport stable	→ Designed to resist vibrations, shocks, mountain terrain, and bumping roads. Design lifetime 10 year. Reduced service costs.
→ AC/DC module available as option	→ During a stay at a campsite the refrigerator can be powered by mains power (100–240 V AC, 50/60 Hz).

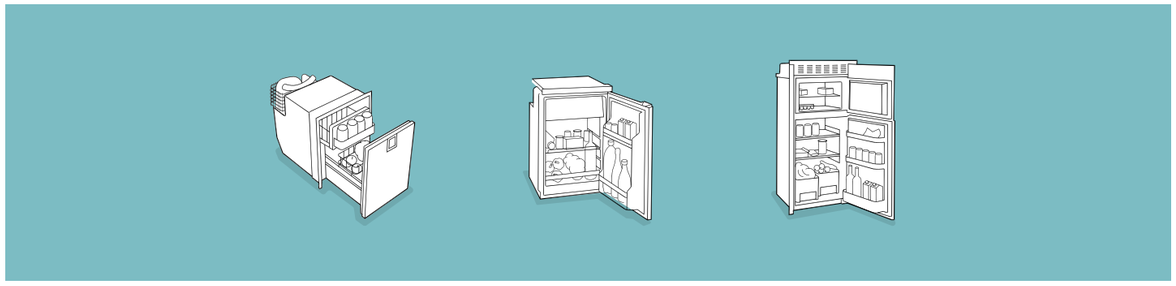

REFRIGERATORS IN TRUCKS

Most truck drivers are on the road for many days at a time. To keep their food and beverages cold they need refrigerators that can be built into the cab.

The BD compressors are tailored for the driving workplaces. BD35F-HD.2 and BD1.4F-VSD-HD are special versions designed to meet even harder road conditions where the refrigerator is mounted on the chassis of the truck. They are universal for 12 V and 24 V DC power supply.

Besides this they are unsurpassed in their ability to tolerate changeable climatic conditions and vibrations under harsh road conditions all over the world.

BD35F and BD50F compressors can be used for both refrigerators and freezers.

The compressors cover a capacity range from 20 to 180 W. They are ideal for low, medium and high back pressure applications and refrigerator sizes up to 80 liters incl. freezer compartment.

The compressors are controlled by an electronic unit that also offers protection against overload and hazardous battery discharge.

The unit also features an internal voltage recorder as well as calibration to the applied voltage (compressor monitoring).

The new BD1.4F-VSD.3 and the BD35F-HD.2 have additional features such as fan speed control, built-in electronic thermostat, communication interface which makes programming the controller easy without requiring resistors or extra wiring.

Features	Benefits
→ Silent operation	→ The driver can sleep without being disturbed by a noisy compressor.
→ High efficiency. Low current consumption	→ Energy saving. Less batteries needed to cool overnight.
→ Variable speed/capacity	→ Energy-savings. Adapts speed to cooling requirement.
→ Direct 12 V/24 V DC power supply	→ Same compressor can be used globally. One product covers the world.
→ Modbus communication connection	→ Customers can make their own control box including control of the BD compressor.
→ Electronic thermostat	→ Cost savings. No extra thermostat needed. Fewer components and failure modes.
→ Alarm & event logs	→ Makes identifying errors fast and is easy to service. Lower service costs.
→ Fan speed control 40 – 100 %. Start/stop delays	→ Reduces noise. Fewer components, fewer costs, less wiring, fewer installation costs.
→ Advanced battery protection function	→ Safety. The battery will never be drained. Trucks can be started safelyevery time.
→ Meets EMI standards	→ The electronic unit meets automotive standards and in most cases no additional EMI filters are needed.

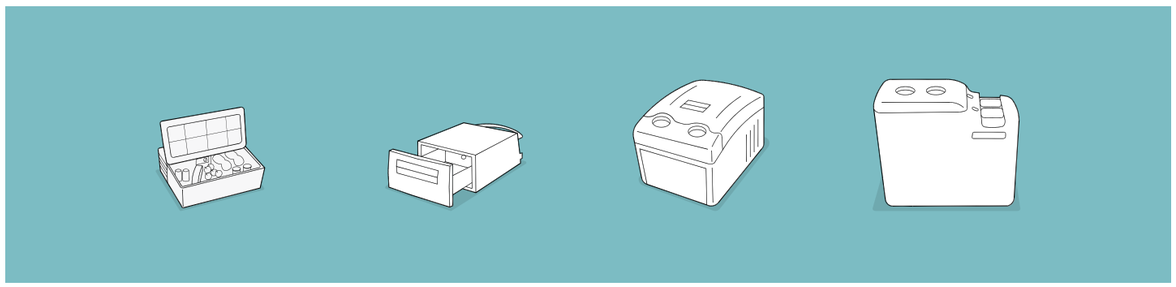

COOLING IN MEDI BOXES

Manufacturers and users of transport equipment for medicines, vaccines, blood plasma, and organs know how critically important it is to store these products at the right temperature during transport. Vaccines and stored blood for example may only be given, if the temperature gradient during transport can be completely proven. Similar high requirements apply to protein medicines, dialysis preparations, and organs.

The BD35F and BD50F compressors have been specially designed for temperature controlled transportation. They ensure that the temperature can be kept at a constant temperature within the range of -18 °C to +8 °C and are therefore unsurpassed to be used in medi boxes for transporting medicines from main pharmacies to drugstores and organs from donor to recipient as well as storing medicines and vaccines in ambulances, for example.

BD compressors are universal for 12 V and 24 V DC power supply and can be used in medi boxes up to 150 liters.

The compressors cover a capacity range from 20 to 180 W. They are ideal for low and medium back pressure applications.

An electronic unit including protection against overload and hazardous battery discharge controls the compressors.

The unit also features an internal voltage recorder as well as calibration to the applied voltage (compressor monitoring).

The new BD1.4F-VSD.3 has additional features such as fan speed control, built in electronic thermostat, communication interface which makes programming the controller easy without requiring resistors or extra wiring.

Features	Benefits
→ Reliable compressor. More than 40 years in the market.	→ High level of security. No damage to vaccines, etc. due to too high temperatures.
→ High efficiency. Low current consumption	→ Energy-saving. Less battery consumption needed to cool overnight.
→ Variable speed/capacity	→ Energy savings. Adapt speed to cooling requirement.
→ Direct 12 V/24 V DC power supply	→ Same compressor can be used globally. One product covers the world.
→ Modbus communication connection	→ Customers can make their own control box including control of the BD compressor. Temperatures can be logged via communication interface.
→ Electronic thermostat	→ Very accurate temperature control. Cost savings. No extra thermostat needed. Fewer components and failure modes.
→ Alarm & event logs	→ Makes identifying errors fast and is easy to service. Reduced service costs.
→ Fan speed control 40 – 100 %. Start/stop delays	→ Fewer components, fewer costs, less wiring, fewer installation costs.
→ Advanced battery protection function	→ Safety. The battery will never be drained. Vans can be started safely every time.
→ Lightweight compressor	→ Easy to carry a smaller medical box to small towns, even with a small battery mounted in the box.

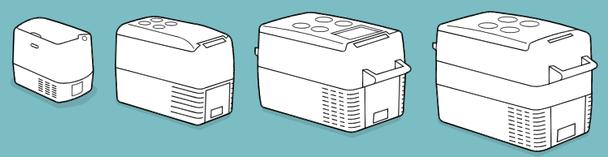

SOLAR ASSISTED COOLING

With its BD35F and BD35K solar compressors, Secop offers a refrigeration solution for places with poor or no power supply. Thanks to the exceptionally low starting current, batteries are not required if an ice bank is used for energy storage.

BD35F and BD35K solar compressors offer numerous functions for manufacturers within the rapidly growing area of mobile and stationary refrigeration. For example, storage and transportation of drugs, storage of food under difficult conditions without power supply, ice cream stands in holiday resorts, remote bottle coolers, refrigerators in boats, just to name a few.

At times when there is no sun, the ice packs keep the cabinet at the set temperatures.

Its wide voltage range (10–45 V DC) makes the BD very suitable for powering photovoltaic systems.

The new BD50K with its High Speed controller needs an addional capacitor or battery but offers higher cooling capacity.

An example on the latter was displayed at a UN summit in Johannesburg, South Africa. On this occasion, we supplied the compressor for a solar cabinet, complying with the tough demands of WHO (storage for 3 days without power supply).

The concept is well accepted by WHO and UNICEF today.

Features	Benefits
→ Reliable compressor. More than 40 years in the market.	→ High level of security. No damage to vaccines, etc. due to too high temperatures.
→ High efficiency. Low current consumption	→ Energy-saving. Less batteries needed to cool overnight.
→ Variable speed/capacity	→ Energy savings. Adapts speed to cooling requirement.
→ Direct 12 V/24 V DC power supply	→ Same compressor can be used globally. One product covers the world.
→ Modbus communication connection	→ Customers can make their own control box including control of the BD compressor. Temperatures can be logged via communication interface.
→ Electronic thermostat	→ Very accurate temperature control. Cost savings. No extra thermostat needed. Fewer components and failure modes.
→ Alarm & event logs	→ Makes identifying errors fast and is easy to service. Lower service costs.
→ Fan speed control 40 – 100 %. Start/stop delays	→ Fewer components, fewer costs, less wiring, fewer installation costs.
→ Advanced battery protection function	→ Safety. The battery will never be drained. Vehicles can be started safely every time.
→ Very low weight of compressor	→ Easy to carry a smaller medical box to small towns, even with a small battery mounted in the box.

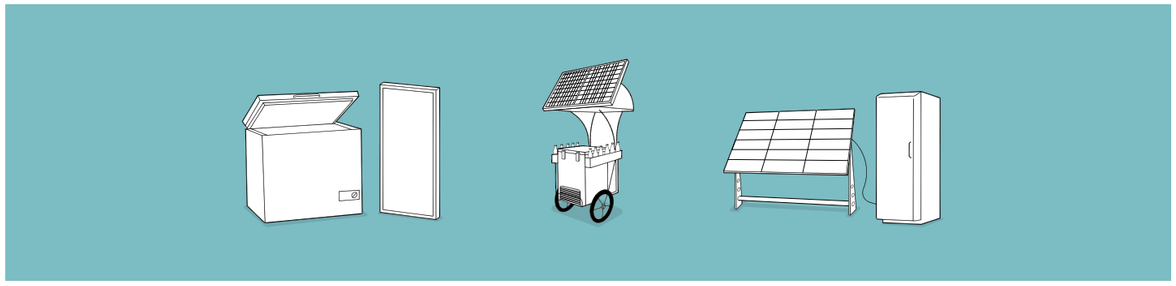

COOLING IN PORTABLE COOLING BOXES

Today, more and more people want to spend their vacation in places that are off the beaten track where there is no electricity power, yet they still want to be able to cool their food and beverages. This has created a demand for a market for portable cooling boxes.

The BD35F compressor is the ideal choice for this application. It is battery-powered, compact, light, and easy to carry around. It also functions as an independent compressor to refrigerate a cooler in the car during family outings. What's more, it's also nice for a salesperson to always have chilled food and beverages at hand.

The BD35F is universal for 12 and 24 V DC power supply. The compressors cover a capacity range from 20 to 130 W. They are ideal for low and medium back pressure applications. Cooling boxes from 18-150 liters.

The electronic unit is mounted on the compressor – this means no additional mounting costs.

The compressors operate with electronic as well as standard mechanical thermostats. They can be powered directly from an AC/DC unit. A switch in the power supply cables can be mounted to eliminate standby power consumption.

The BD compressors have an internal voltage recorder and calibration to the applied voltage as well as adjustable battery protection settings. The capacity can be varied by regulating motor speed. An electronic unit including protection against overload and hazardous battery discharge controls the compressors. The new BD1.4F-VSD.3 has additional features such as fan speed control, built-in electronic thermostat, communication interface which makes programming the controller easy, without requiring resistors or extra wiring.

Features	Benefits
→ Low weight	→ The smallest BD compressor weighs only 2.3 kg, making it easy to carry.
→ Small and compact	→ 60 % less volume on BD1.4F-VSD.3 compared to BD35F. Increase net volume of the box.
→ Silent operation	→ The owner can sleep close to the box without being disturbed by a noisy compressor.
→ High efficiency. Low current consumption	→ Energy-saving. Less battery capacity needed to keep the goods cooled.
→ Variable speed/capacity	→ Energy savings. Adapts speed to cooling requirement.
→ Direct 12 V/24 V DC power supply	→ Same compressor can be used globally. One product covers the world.
→ AC/DC module available as option	→ If grid power is available, the box can be powered by mains power (100–240 V AC, 50/60 Hz).
→ Electronic thermostat	→ Cost savings. No extra thermostat needed. Fewer components and failure modes.
→ Alarm & event logs	→ Makes identifying errors fast and is easy to service. Reduced service costs.
→ Fan speed control 40 – 100 %. Start/stop delays	→ Reducing noise. Fewer components, fewer costs, less wiring, fewer installation costs.
→ Advanced battery protection function	→ Safety. The battery will never be drained. Cars can be started safely every time.

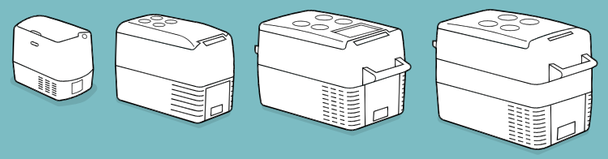

CONTROL YOUR COLD CHAIN
BD VAN BOXES

The most economical and efficient solution for small-scale transport is a mobile refrigeration unit that fits easily into cars and vans, and is powered by the car's own battery.

The advantages of such a solution are clear:

The vehicle does not need to be altered. Cabinets can also be moved from vehicle to vehicle and even run on 220 V AC with the help of an AC/DC converter when the engine is turned off. In addition, the systems are more energy efficient and can be custom built to a wide range of sizes — depending on storage requirements.

Finally, an expensive, impractical, specially adapted refrigerated van is no longer the only option on the market. In recent years, mobile cooling solutions have become increasingly competitive, and the latest solutions are far more economical, practical, and efficient. This is the most flexible and cost effective solution for meeting the HACCP guidelines.

- Vans can be bought in standard model version and no extra bodywork on van is required
- Refrigeration when the engine is not running
- Both battery and AC utility can be used via a converter
- The box is mobile and can be handled separately. Can be used as extra refrigerator and can be loaded directly in the cooling or freezer room
- Lower energy consumption (lower CO_2 emission per kilometer)
- The can can be used for other purposes when not being used to carry refrigerated food
- Van can be resold much easier
- No hygiene issues with the car itself
- "Streamlined" car lower wind resistance, lower energy consumption, lower CO_2 emission
- Operation and service much easier

Features	Benefits
→ Runs directly on the car batteries	→ Keeps the goods active cooled also when the van is stopped for loading and unloading.
→ High efficiency. Low current consumption	→ Energy-saving. Makes it possible to cool also when the van's motor is stopped.
→ Variable speed/capacity	→ Energy savings. Adapt speed to cooling requirement.
→ Direct 12 V/24 V DC power supply	→ Same compressor can be used globally. One product covers the world.
→ Modbus communication connection	→ Customers can make their own control box including control of the BD compressor.
→ Electronic thermostat	→ Cost savings. No extra thermostat needed. Fewer components and failure modes.
→ Alarm & event logs	→ Makes identifying errors fast and is easy to service. Reduced service costs.
→ Fan speed control 40 – 100 %. Start/stop delays	→ Fewer components, fewer costs, less wiring, fewer installation costs.
→ Advanced battery protection function	→ Safety. The battery will never be drained. Vans can be started safely every time.

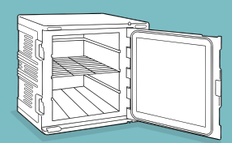

TELECOM COOLING
INCREASE BATTERY LIFETIME

When power fails, battery cooling systems must draw on their batteries' power. Since the compressor is the main power consumer, a lot can be gained with a solution that is extremely efficient without being overly power hungry.

By using a battery powered direct current (DC) compressor, it is possible to build a cooling system that can run on batteries, solar cells, and wind turbines without needing to convert to alternating current (AC).

The BD250GH.2 and BD350GH compressors are unique as they are constructed with integrated fan control and electronic thermostat. In this way, it is possible to simplify the design of the overall system and still ensure maximum performance.

With battery drain being a big issue, it is important to use an energy efficient compressor with the highest COP possible.

Compared to other solutions that rely on AC and 230 V AC conversion, the BD250GH.2 and BD350GH compressors save up to 250 W per hour.

In areas that rely on battery power for up to 16 hours a day, you can be certain that Secop BD compressors will ensure that batteries will last as long as possible.

The optimal temperature for batteries is 25 °C. Anything above this will shorten their life expectancy and provide their owners with an inconvenient replacement cost.

Features	Benefits
→ Higher COP with DC compressors	→ Better efficiency.
→ Direct power supply to the compressor (32 – 62 V DC)	→ Fast installation and fewer failure modes.
→ 100 % cooling, also at grid power failure	→ Maintaining lifetime of batteries save up to 20.000 USD over 8 years.
→ Up to 90 % less failure modes on BD compressors compared to AC solutions.	→ Reduced service costs and much better "up-time" of the BTS station.
→ Modbus communication connection	→ Customers can make their own control box including control of the BD compressor. Remote monitoring possible.
→ Electronic thermostat	→ Cost savings. No extra thermostat needed. Fewer components and failure modes.
→ Alarm & event logs	→ Makes identifying errors fast and is easy to service. Reduced service costs.
→ Fan speed control 40 – 100 %. Start / stop delays	→ Fewer components, fewer costs, less wiring, fewer installation costs.

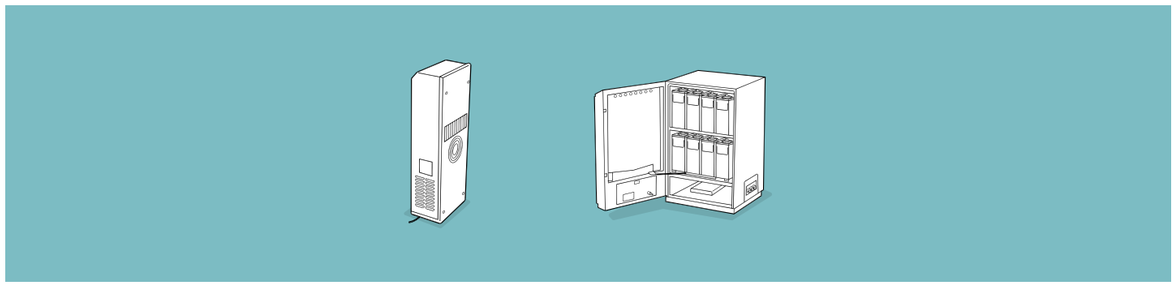

MOBILE REFRIGERATION IN CARS

The demand for mobile refrigeration in cars has increased due to the increasing amount of time that people spend in them. With its compact design, low noise level, and robustness against vibrations, the BD compressor is the perfect solution for cool boxes in cars offering the driver and passengers the comfort not to stop every time they want food or something to drink. And when not on the road, the storage box keeps items cold for up to five hours after the car engine has been turned off. There are number of areas to place a cool box in a car. The center console area is possibly the most obvious location, but the cool box can also be put under the passenger seat or even within the front passenger seat — where access is via a lift-up seat cushion.

Lose excess weight and use the extra space for what really matters. The new BD1.4F-AUTO.3 and the BD1.4F-VSD.3 from Secop are 60 % smaller than previous models and weigh in at only 2.3 kilos. Perfect for 10–15 liter in-car cabinets that need to fit into tight spaces without compromising storage space.

Specially designed for maximum efficiency and reliability, this tiny powerhouse of a compressor makes it easier than ever to provide leading class mobile fridges to the discerning automobile manufacturers.

The optimized, low-noise motor ensures outstanding performance when you want to provide that extra degree of luxury on the move.

Cool beverages on demand make driving so much more of an experience. Fridges using the BD1.4F-AUTO.3 or the BD1.4F-VSD.3 take up less space and allow small fridges to fit easily with maximum storage space for snacks and beverages. Low energy consumption is good for car batteries and the environment.

Features	Benefits
→ Low weight	→ Only 2.3 kg for the smallest BD compressor. Overall weight reduction in the car.
→ Small and compact	→ 60 % less volume on BD1.4F-AUTO.3/-VSD.3 compared to BD35F. Increase net volume of the box.
→ Silent operation	→ The owner can sleep close to the box without being disturbed by a noisy compressor.
→ High efficiency. Low current consumption	→ Energy-saving. Less battery capacity needed to keep the goods cooled.
→ Variable speed/capacity	→ Energy savings. Adapts speed to cooling requirement.
→ Direct power supply	→ Same compressor can be used globally. One product covers the world.
→ Transport stable	→ Long lifetime. Minimum of spare parts.
→ Electronic thermostat	→ Cost savings. No extra thermostat needed. Fewer components and failure modes.
→ Alarm & event logs	→ Makes identifying errors fast and is easy to service. Reduced service costs.
→ Fan speed control 40 – 100 %. Start/stop delays	→ Reducing noise. Fewer components, fewer costs, less wiring, fewer installation costs.
→ Advanced battery protection function	→ Safety. The battery will never be drained. Cars can be started safely every time.
→ Meets EMI standards	→ The electronic unit meets automotive standards.

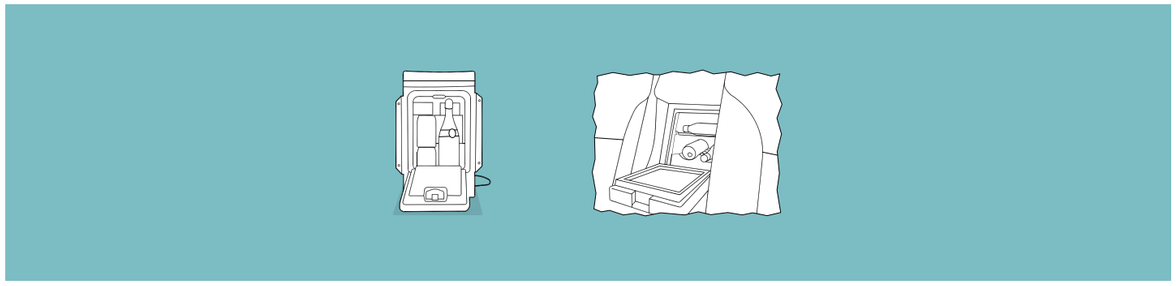

MOBILE REFRIGERATION IN BUSES

Many coaches offer passengers to buy cold beverages during a long tour. BD compressors are universal for 12 V and 24 V DC power supply and can be used in all kind of busses. They are unsurpassed in tolerating changeable climatic conditions and vibrations under harsh road conditions. The BD1.4F-VSD.3, BD35F, BD35F-B and BD35K-B compressors cover a capacity range from 20 to 180 W. They are ideal for low and medium back pressure applications.

A special version of the electronic unit adapts the capacity of the compressor automatically (AEO) to the actual load on the refrigeration system. The algorithm adjusts the speed of the compressor to achieve a running time of approximately 30 minutes. This is the most energy efficient way to operate the compressor.

The BD1.4F-VSD.3 and BD35F/BD35F-B/BD35K-B (with electronic unit 101N0242) offer an ECO function which adapt the speed of the compressor to an optimum level.

It has additional features such as fan speed control, built-in electronic thermostat, communication interface which makes programming the controller easy, without requiring resistors or extra wiring.

Ideal for refrigerator sizes up to 30–50 liters with freezer compartment. The compressors are controlled by an electronic unit including protection against overload and hazardous battery discharge.

The unit also features an internal voltage recorder as well as calibration to the applied voltage (compressor monitoring).

Features	Benefits
→ Low weight	→ Only 2.3 kg for the smallest BD compressor makes it easy to carry.
→ Small and compact	→ 60 % less volume on BD1.4F-VSD.3 compared to BD35F. Increase net volume of the box.
→ Silent operation	→ The owner can sleep close to the box without being disturbed by a noisy compressor.
→ High efficiency. Low current consumption	→ Energy-saving. Less battery capacity needed to keep the goods cooled.
→ Variable speed/capacity	→ Energy savings. Adapts speed to cooling requirement.
→ Direct 12 V / 24 V DC power supply	→ Same compressor can be used globally. One product covers the world.
→ Special designed BD for buses.	→ BD35F-B and BD35K-B reduce any noise from the compressor to an absolute minimum even on very bumpy roads.
→ Electronic thermostat	→ Cost savings. No extra thermostat needed. Fewer components and failure modes.
→ Alarm & event logs	→ Makes identifying errors fast and is easy to service. Reduced service costs.
→ Fan speed control 40 – 100 %. Start/stop delays	→ Reducing noise. Fewer components, fewer costs, less wiring, fewer installation costs.
→ Advanced battery protection function	→ Safety. The battery will never be drained. Busses can be started safely every time.
→ Meets EMI standards	→ The electronic unit meets automotive standards and in most cases no additional EMI filters are required.

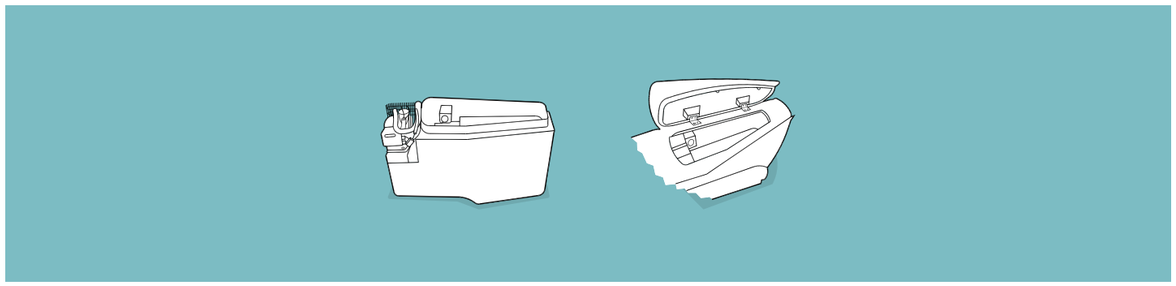

AIR FREIGHT COOLING

Transporting pharmaceutical products by air around the world under safe and temperature-controlled conditions can mean the difference between life and death. Especially in the globalized world that we live in, reliable cooling of airfreight is vital for the patients who depend on effective medication. Having a dependable cold chain during the whole transportation is key to keeping the number of wasted pharmaceuticals due to a broken cold chain as low as possible.

On many occasions, temperature fluctuations around 2 °C can make the difference regarding the viability of vaccines. To maintain these strict temperature conditions, Secop offers a multitude of DC-powered compressors to equip specialized containers. While the usual transportation methods rely on gel packs, dry ice, or operating compressors during transportation to cool goods, the installed BD series compressor operates prior to transport to freeze the container's eutectic plates.

Thereby the current containers are able to get FAA approval while exceeding the World Health Organization's "Cold Chain Storage and Distribution" guidelines.

The BD series compressors use approximately 6 kilowatts of energy to freeze the cooling plates prior to the transportation which reduces the cost down to $ 0.50. The eutectic cooling plates can keep the goods cool for days while the containers can be moved without any additional necessary equipment.

Our BD series compressors are able to withstand harsh changes in climate conditions and are unsurpassed in tolerating vibrations.

Our compressor models BD350GH and BD250GH.2 have been used for many years specifically for cooling airfreight. The installed electronic control unit is proven to be very robust while maintaining accurate temperatures and meeting the EMC requirements for aviation.

Features	Benefits
→ Runs directly on batteries.	→ Active cooling through the whole cold chain.
→ High efficiency. Low current consumption.	→ Energy-saving. Batteries will last longer.
→ Variable speed/capacity	→ Energy savings. Adapts speed to cooling requirement.
→ No need for insulated packaging.	→ Eliminates the need for a refrigerated truck. Saves time and costs.
→ Modbus communication	→ Customers can communicate with the compressor for monitoring and control.
→ Internally powered during transport.	→ Always active cooling.
→ Precise temperature control.	→ No scrap or damaged pharmaceutical products.
→ No need for dry ice.	→ Eliminates HAZMAT costs.
→ Advanced battery protection function	→ Safety. The battery will never be drained.

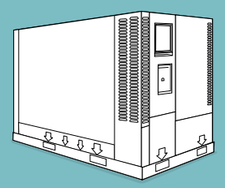

3

DC COMPRESSORS BASICS

3.1 Secop Variable Speed Compressors for Direct Current 52
3.1.1 Refrigerants 54
3.1.2 Handling of Refrigerants 54
3.1.3 Charging with Refrigerant 54
3.1.4 HFC Refrigerants (R134a) 55
3.1.5 Flammable Refrigerants R290 and R600a 55
3.1.6 Connectors 55
3.1.7 Advantages of Direct Current Compressors 56
3.1.7.1 Tilt Angle 56
3.1.8 Denomination – Key to DC-Compressor Type Designation 56
3.1.9 Date Code & Country of Origin 57
3.1.10 Country of Origin on Typelabel 57
3.1.11 Typelabels Overview 58
3.1.12 Labels on Electronic Units 58
3.1.13 Label Design 59
3.1.14 VDE/CB/UL Approved Compressor – Electronic Unit Combinations 59

3.2 Electronic Units – Technical Data 60

3.3 Electronic Units – Housings 62

3.4 Electronic Units – Features 64
3.4.1 Voltage Ranges with Compressors 64
3.4.2 Cable Dimensions 65
3.4.3 Compressor Speed Control 65
3.4.4 Thermostat Connection 65
3.4.5 Adaptive Energy Optimization (AEO) Function 65
3.4.6 AEO Function for BD35F/K, BD50F/K, BD80F, BD250GH.2, BD100CN 66
3.3.7 ECO Function 67
3.3.8 Fan Connections 67
3.3.9 Fan Output Power 68
3.3.10 Lamp Connection 68
3.3.11 Fault Detection and Diagnosis 68
3.3.12 Overload Protections 69
3.4.13 Battery Protection – for ... 70
3.4.13.1 Electronic Units 101N0242/390/340/510/680 71
3.4.13.2 Electronic Unit 101N1010 71
3.4.13.3 Electronic Units 101N2130/101N5100 (Standard) 72
3.4.13.4 Electronic Units 101N2130 / 101N5100 (Optional) 72
3.4.14 Setpoint Selection for Electronic Unit 101N2130 72
3.4.15 Mounting the Electronic Unit 73
3.4.16 Mounting the Remote Kit 73

3.5 Precondition for Long Operating Life 74
3.5.1 Motor Overload 74
3.5.2 Thermal Overload 74

3.6 Design Limits 75
3.6.1 Coil Temperature 75
3.6.2 Condensing Temperature 75

3.7 Moisture and Impurities 76
3.7.1 Filter Drier Selection 76

3.8 Condition at Delivery / Warnings 77

3.9 Variable-Speed Compressors – Capillary & Charge Determination 78

3.10 Max. Refrigerant Charge 80

3.11 Conversions 81

3.12 Mounting the compressor 82
3.12.1 Connector positions 82

3.13 Mounting Accessories 83

3.14 Shipment Positions 84

3.15 Sectional Drawing BD P-Housing 85

3.1
SECOP VARIABLE SPEED COMPRESSORS FOR DIRECT CURRENT

BD Micro

BD P-Housing

BD T-Housing

°CCD®
VARIABLE SPEED DRIVE

Secop variable speed compressors type BD (battery driven) **BD1.4F-AUT0.3/-VSD.3**, **BD35F**, **BD50F**, **BD80F**, **BD250GH.2**, **BD350GH** and **BD220CL** are designed for connection to 12 – 24V DC and 48V DC power supply and for refrigerant types R134a or R404A/R507 and prepared for R513A, R452A and/or R1234yf.

The compressors are intended especially for use in mobile applications, e.g. cooling boxes, boats, caravans, trucks, vans, buses and cars. Due to their low energy consumption and the option for a wide supply voltage range, the compressors are also very suitable for stationary applications powered by photovoltaic solar panels.

The compressors can be used in refrigerators and freezers using either capillary tube or TEV as the throttling device.

The compressors **BD35K, BD50K, BD80CN** and **BD100CN** are especially designed for refrigeration systems using isobutane, refrigerant R600a and propane, refrigerant R290, respectively, as can be seen from the individual type label information. Isobutane and propane are also called hydrocarbons.

Hydrocarbons are not implicated in ozone depletion (ODP), and the majority of hydrocarbon refrigerants have a GWP rating (Global Warming Potential) of 3.

The role of hydrocarbon refrigerant systems in reducing harmful greenhouse gases is twofold: Firstly, direct greenhouse gas (CO_2) emissions are significantly decreased thanks to the low GWP rating of hydrocarbons. And secondly, the features of a hydrocarbon system (lower condensing point, positive thermodynamic attributes, and superior COP) act in combination to optimize energy-efficient operation.

Assisted by the cheap availability of hydrocarbons produced as a by-product of gas and oil working, and by many studies demonstrating the energy savings hydrocarbon systems can deliver, hydrocarbons have proved to be viable replacements for fluorocarbons and other environmentally harmful refrigerants.

R600a and R290 are classified as flammable refrigerants of class A3 according to ANSI/ASHRAE 34. Accordingly, special safety regulations must be complied with. A special test schedule has been integrated in the European standards EN 60335-2-24 for domestic and EN 60335-2-89 for commercial appliances and in the corresponding international standards IEC 60335-2-24 and IEC 60335-2-89.

The compressors **BD35K, BD50K, BD80CN** and **BD100CN** must only and exclusively be used in appliances certified for flammable refrigerants according to these or later regulations.

Secop BD compressors are intended for use in mobile and stationary applications e.g. portable cooling boxes, boats, caravans, trucks, parking cooling in trucks, vans, buses, cars and battery and shelter cooling in telecom stations. Due to the low power consumption and the option for a wide supply voltage range, the compressors are also suitable for stationary applications powered by photovoltaic solar panels, or fuel cells.

In bus applications a special version of **BD35F-B** has been developed. It is designed to minimize noise when the bus is driving.

In truck applications special versions, **BD35F-HD.2** and **BD1.4F-VSD-HD**, have been made to meet truck standards in regards to shock and vibration.

Secop's variable-speed drive **°CCD® controller** (Cool Capacity Drive) offer the possibility to adjust the refrigeration capacity of the compressor and adapt it to the desired need by controlling the motor speed. The most important advantage of adaptable capacity is reduced energy consumption but also a reduced average noise level is possible.

3.1.1 REFRIGERANTS

Refrigerants with certain molecular structures have been identified as substances that can be harmful to the environment. Two properties are critical: the ozone depleting potential (ODP) and the global warming potential (GWP). The first negative property is covered by the Montreal Protocol ('Montreal Protocol on Substances that Deplete the Ozone Layer') from 1987 which is an international agreement designed to protect the earth's ozone layer by phasing out the production of numerous substances that are responsible for ozone depletion. The result was the replacement of HCFC (halogenated chlorofluorocarbon, R22) refrigerants with HFC (hydrofluorocarbon, e.g. R134a) refrigerants which have an ODP of zero (or close to zero). The significant downside of HFC refrigerants is their high global warming potential since they belong to the category of greenhouse gases. This fact was discovered after the Montreal Protocol was adopted and was recently covered by an amendment adopted in Kigali in October 2016. Before this amendment, the United States and the EU had introduced regulations to define the phase down and replacement of these HFCs on a federal level.

Secop has been a pioneer and early adopter of hydrocarbons as refrigerants and believes the most efficient and economical friendly substances for use in cooling appliances are isobutane (R600a) and propane (R290). Secop recommends the first one as a replacement for household appliances and small capacities in the light commercial segment and the latter one for medium to large light commercial applications. Secop is also aware that the transition towards hydrocarbons is challenging for manufacturers as well as for service providers and not always feasible in the short term.

Tests have so far shown good results with refrigerant R452A as a drop-in replacement for R404A and R507. Based on this information, Secop allows the use of R452A on all its R404A and R507 released compressors. It is the customer's responsibility to validate the application, and they should carefully consider the requirements and drawbacks when changing from R404A/R507 to R452A in their application.

The HFO (hydrofluoroolefin) R1234yf can be used as drop-in for replacing R134a in the short-term for most of the applications. R1234yf is classified as flammable according to relevant safety standards. It is more expensive than R134a, however, it holds remarkably less greenhouse potential than R134a. Our R134a compressors can be used for testing with this refrigerant, and we will be more than happy to assist you in discovering that right solution for you and when it comes to the approval procedure. Investigations into material compatibility have so far shown good results with refrigerant R1234yf in Secop R134a compressors. These results must be confirmed in ongoing long-term tests. Currently, testing system performance can be conducted using compressors originally designed for R134a. The same application limits as described on the R134a data sheet may be used, however, partly with changed electrical equipment. Since R1234yf is classified as a flammable refrigerant, the compressors must be used with starting equipment approved for flammable refrigerants. The compressors designed for R134a do not have a safety approval for flammable refrigerants like R1234yf.

3.1.2 HANDLING OF REFRIGERANTS

To ensure reasonable refrigeration system life, the refrigerant must have a maximum moisture content of 20 ppm (20 mg/kg). Do not fill the refrigerant from a large container into a filling bottle through several container sizes, as with every drawing-off the water content in the refrigerant is increased considerably.

3.1.3 CHARGING WITH REFRIGERANT

Normally, charging with refrigerant is no problem with a suitable charge, provided that the charging amount of the refrigeration system equipment is known.

Always charge the refrigerant amount and type stated by the refrigerator manufacturer. In most cases this information is stated on the refrigerator type label. The different compressor brands contain different amounts of oil, so when converting to another brand it may be advisable to correct the amount of refrigerant. Charge of refrigerant can be made by weight or volume.

Flammable refrigerants like R600a and R290 must always be charged by weight. Charging by volume must be made with a refrigerant charging cylinder. The refrigerant R404A and all other refrigerants in the 400 series must always be charged as liquid.

If the charging amount is unknown, charging must be done gradually until the temperature distribution above the evaporator is correct. However, mostly it will be more appropriate to overcharge the system and then gradually draw off refrigerant until the correct charge has been obtained. The refrigerant charge must be made with the compressor running, the refrigerator without load and with the door closed.

The correct charge is characterized by the temperature being the same from the inlet to the outlet of the evaporator. At the compressor suction connector the temperature must be approx. ambient temperature. Thus transfer of moisture to the refrigerator insulation is avoided.

Systems with an expansion valve must be charged with refrigerant until there are no bubbles in the sight glass, which should be placed as close to the expansion valve as possible.

3.1.4 HFC REFRIGERANTS (R134a)

The HFC refrigerant R134a and HFC mixtures require Polyester type oil. Contamination of components and systems with mineral oil and alkylbenzols must be avoided. Greasy substances and other long-chained, high molecular substances not dissolved must not be present. Manufacturing processes which require a lubricant can be done with Polyester oil approved for the compressors. Procedures for mounting, evacuation and charging must be carried out in such a way that contamination with chlorine refrigerants is avoided. HFC refrigeration systems must always have a drier with 3 Angstrom Molecular Sieves.

3.1.5 FLAMMABLE REFRIGERANTS R290 AND R600a

R600a (isobutane) and R290 (propane) are a hydrocarbons. Hydrocarbon refrigerants are flammable and are only allowed for use in appliances that meet the requirements set out in the latest revision of EN/IEC 60335-2-34. Consequently, R600a and R290 are only allowed to be used in appliances designed for this refrigerant and fulfil the above-mentioned standard. R600a and R290 are heavier than air and the concentration will always be highest at the floor. R600a must only be stored and transported in approved containers and must be handled according to existing guidelines.

Do not use the refrigerants R600a or R290 near an open fire. The refrigeration systems must be opened with a tube cutter.

The flammability limits are approx. as follows,

Refrigerant	R600a	R290
Lower limit	1.5 % by vol. (38 g/m³)	2.1 % by vol. (39 g/m³)
Upper limit	8.5 % by vol. (203 g/m³)	9.5 % by vol. (177 g/m³)
Ignition temperature	460 °C	470 °C

To properly perform maintenance and repair work on R600a or R290 systems, service staff must be properly trained in handling flammable refrigerants. This includes knowledge of tools, transportation of the compressor and refrigerant, and the relevant regulations and safety precautions when carrying out service and repair work.

Do not use open fire when working with refrigerants R600a and R290!

Conversions from refrigerants R12 or R134a to R600a is not permitted, as the refrigerators are not approved for operation with flammable refrigerants, and the electrical safety has not been tested according to existing standards either. The same applies to conversions from refrigerants R22, R502 or R134a to R290.

Secop compressors that use flammable refrigerants R600a and R290 are equipped with a yellow warning label as shown.

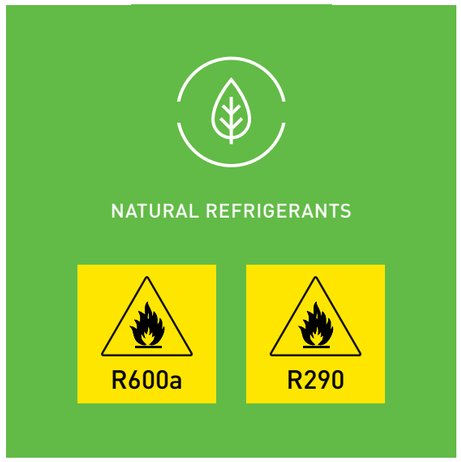

3.1.6 CONNECTORS

BD compressors are supplied with sealed connectors, which consist of a thick walled copper plated steel tube with great corrosion resistance and good braze ability. The connectors are welded in the compressor housing and thus the welding cannot be destroyed by overheating during brazing operations. The sealing is an aluminium cap which gives a tight sealing. The seal is easily removed with an ordinary pair of pliers or with the tool shown in the figure.

Most BD compressors are supplied with millimetre tubes, but some variants supplied with inch tubes.

All connectors have a shoulder to provide optimal brazing conditions. Drifting of the connectors for more than 0.3 mm is not allowed.

For the refrigerants R600a and R290, process tubes can be closed with a LOKRING® connection.

Brazing is not allowed during servicing systems with flammable refrigerants.

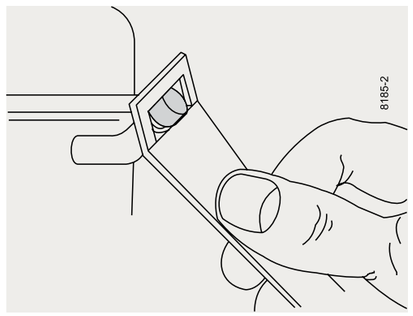

3.1.7 ADVANTAGES OF DIRECT CURRENT COMPRESSORS

Secop direct current compressors can be used in applications using either capillary tube or TEV as the throttling device.

The BD compressor must be mounted in a dry and clean place. The compressors will withstand storage temperatures down to -25°C and up to +70°C.

Condensing temperatures:
Max. 60°C at stable conditions and max. 70°C at peak load.
Ambient temperatures: Min. -10°C, max. 43°C

The BD compressor concept includes an electronic unit which features overload protection, battery protection, wrong polarity protection, evaporator and condenser fan control, LED diagnosis signal, light bulb connection, load dump protection, mechanical or electronic thermostat, ECO function, AEO (Adapative Energy Optimizing) function and bus communication interface. These features are model dependant. The electronic module has internal voltage recording and calibration to the applied voltage. The electronic module may also be powered directly from certain types of electronic power supply units and thus no battery is required.

In addition to being especially quiet in operation – ranging from 33 dB(A) to 38 dB(A)– depending on model and speed of compressor, all BD compressors have high COP values.

3.1.7.1 TILT ANGLE

The BD compressors are designed to be mounted in a horizontal position. However they are also designed to operate temporarily in conditions with heeling up to 30º such as can occur in boats, car and trucks driving in mountains. Under such heeling conditions the compressor can be noisy when internal compressor parts knock against the compressor shell.

Key to DC Compressor Type Designation (BD-Series)

1	2		3		4	5
Compressor design	Compressor size		Application range	Refrigerant	Special features (optional, can be used in combination)	Generation
	Capacity at rating point	Displacement				
BD (P/T-Housing)	35 50 80 100 250 350		CN = LBP/MBP CL = LBP F = LBP/MBP/(HBP)	R290 R404A/R507 R134a R134a/R1234yf	– AUTO = automotive – VSD = variable speed drive – HD = heavy duty (can handle extreme vibrations) – B = bus-optimized (optimized for rough vehicle motions) – AM = aftermarket (optimized for aftermarket appliances)	Blank → first generation .2 → second generation .3 → third generation
BD (Micro)		1.4	GH = (LBP/MBP)/HBP K = LBP/MBP/(HBP)	R134a R600a		

3.1.8 DENOMINATION

1 The first letter of the denomination indicates compressor series.

2 For BD Micro compressors a number indicates the displacement in cm^3, but for BD compressors based on P/T housing the number indicates the nominal capacity.

3 The letter after the displacement indicates which refrigerant must be used as well as the field of application for the compressor.

LBP (Low Back Pressure) indicates the range of low evaporating temperatures, typically -10°C down to -35°C or even -45°C.

MBP (Medium Back Pressure) indicates the range of medium evaporating temperatures, typically -20°C up to 0°C.

HBP (High Back Pressure) indicates high evaporating temperatures, typically -5°C up to +15°C.

R134a or **R134a/R1234yf → F**: BD Compressors with denominations ending with F are primarily designed for low evaporating temperatures (LBP/MBP) but will also work with high evaporating temperatures (HBP).

R134a → GH: Compressors with denominations ending with GH are designed for high evaporating temperatures (HBP).

R290 → CN: Compressors with denominations ending with CN are designed for low evaporating temperatures (LBP) and medium evaporating temperatures (MBP).

R404A/R507 → CL: Compressors with denominations ending with CL are primarily designed for low evaporating temperatures (LBP).

R600a → K: All compressors for R600a have denominations ending with K after the number for displacement or capacity. They are primarily designed for low evaporating temperatures (LBP/MBP) but will also work with high evaporating temperatures (HBP).

4 The next letter in the compressor denomination provides information on special features the BD compres sor offers.

5 The final letter (separated by a dot) mentions the generation of the compressor.

3.1.9 DATE CODE FORMAT & COUNTRY OF ORIGIN

Secop compressors have a manufacturing date code stamping on the housing.
The content of the coding (Fig.1) is in two lines according to the example below:
H4485C (6 characters)
051D11R (7 characters, 8 characters for BD Micro)

COMPOSITION OF LINE 1
H4485: Compressor type information (102H4485 = H4485)
C: Internal Secop code

COMPOSITION OF LINE 2
05: Production week
1: Production year
D: Production day
A = Monday, B = Tuesday,
C = Wednesday, D=Thursday, etc.
11: Production hour 00 to 23 or shift code -1, -2, -3
R: Internal production location code
A to G, U Germany:
A until week 50/2005
D until week 35/2006
U until week 08/2010
K to N Slovenia:
K until week 39/2012
L until week 34/2011
M until week 02/2012
N until week 02/2012
A, D, L,M, R, U Slovakia:
A from week 01/2006
D from week 38/2006
L from week 45/2011
M from week 09/2012
R from week 01/2005
U from week 12/2010
S, R Mexico:
R up to week 27/2004
W to Z China

Fig.1 Needle print coding on compressor housing and country of origin on type label

3.1.10 COUNTRY OF ORIGIN ON TYPELABEL

Fig.2 Slovakia

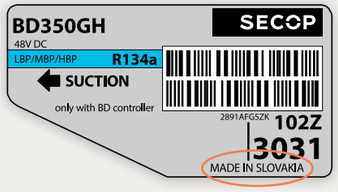

Fig.3 China

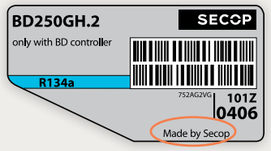

On BD Micro compressors (code number 109Z ...), the production year is indicated by two digits, e.g. "11" for 2011 and a serial number behind the location code.

The country of origin (in capital letters) or the manufacturer will also be marked on the typelabel.

Examples:

MADE IN SLOVAKIA
→ for compressors made in Slovakia (Fig.2)
Made by Secop | optional label "Made in China"

→ for compressors made in China (Fig.3)
- "Made by Nidec" from 05/2018 to 12/2019

3.1.11 TYPELABELS OVERVIEW

BD Micro Series	Label Width = 47 mm	Example
Background colour	grey	
Coloured stripe for refrigerant	R134a/R1234yf or R134a: blue	
Barcode	on white background	
Approvals printed on label	yes	
Voltage printed on label	no	
Application printed on label	no	

BD Series based on **P-Housing**	Label Width = 67 mm	Example
Background colour	grey	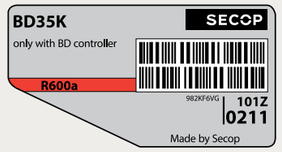
Coloured stripe for refrigerant	R134a: blue, R600a or R290: red	
Barcode	on white background	
Approvals printed on label	yes (except UL)	
Voltage printed on label	no	
Application printed on label	no	

BD Series based on **T-Housing**	Label Width = 85 mm	Example
Background colour	grey	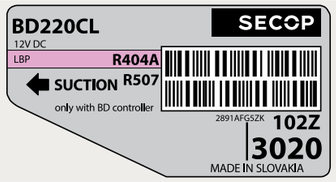
Coloured stripe for refrigerant	R134a: blue, R404A/R507: lilac	
Barcode	on white background	
Approvals printed on label	yes (except UL)	
Voltage printed on label	yes	
Application printed on label	yes	

Note: The remark "only with BD controller" was introduced on all BD compressors in the mid of 2013.

3.1.12 LABELS ON ELECTRONIC UNITS

Labels on electronic units	Examples
Labels on electronic units consist of a 2D Data Matrix code area and a number of lines with informations. The 2D Data Matrix Code is always built up with 62 characters containing information about type, code number, product version, product revision, unit ID, supplier, part number and text. Text information on the label: Line 1: **ID:** PLYYWWssssss (unique number) Line 2: **Date:** YYWW Line 3: **Ver.:** VV Line 4: **Text:** text Meaning: **PL** Production location, 01 ... 99 **YY** Year, 12 = 2012 **WW** Week number, 01 ... 52 **ssssss** Serial number, 000001 ... 999999 **VV** Version, 00 ... 99	

3.1.13 LABEL DESIGN

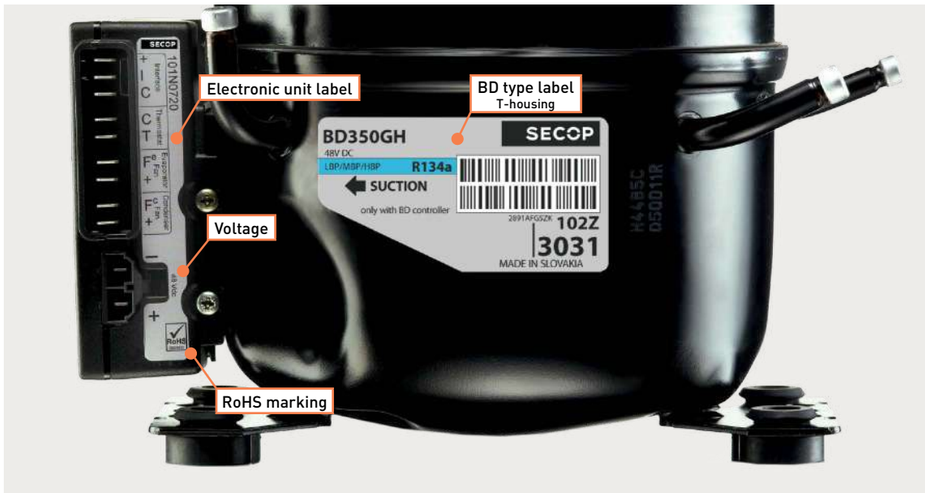

Nominal voltage has been removed from BD compressor type labels based on the P-housing and moved to the electronic unit.

Application marking (LBP/MBP/HBP) has been removed on BD compressors based on the P- and BD-Micro housings.

A lot of our BD compressors have UL approvals. Approved compressor - electronic unit combinations can be found in the table below.

UL approval mark

3.1.14 VDE/CB/UL APPROVED COMPRESSOR – ELECTRONIC UNIT COMBINATIONS (BD P-HOUSING)

Compressors		Electronic Units						
		Standard	AEO	High speed	Solar	AC/DC	Automotive	Telecomm.
		101N0242	101N0340	101N0390	101N0420	101N0510	101N0680	101N0732
BD35F mm	101Z0200		UL/CB/VDE		CB/VDE	UL/VDE	UL/CB/VDE	
BD35F inch	101Z0204		UL/CB/VDE		CB/VDE	UL/VDE	UL/CB/VDE	
BD35F-B	101Z0205		UL/CB/VDE		CB/VDE	UL/VDE	UL/CB/VDE	
BD35F-HD.2	101Z0216						UL/CB/VDE	
BD35K (R600a)	101Z0211		UL/CB/VDE		CB/VDE	CB/VDE	UL/CB/VDE	
BD35K-B (R600a)	101Z0214		UL/CB/VDE		CB/VDE	CB/VDE	UL/CB/VDE	
BD50F mm	101Z1220		UL/CB/VDE			UL/VDE	UL/CB/VDE	
BD50F inch	101Z0203		UL/CB/VDE			UL/VDE	UL/CB/VDE	
BD50K (R600a)	101Z0213							
BD80F mm	101Z0280							
BD80CN (R290)	101Z0403		UL/CB/VDE		UL/CB/VDE	UL	UL / CB / VDE	
BD100CN (R290)	101Z0401							
BD250GH.2 (12/24V)	101Z0406							
BD250GH.2 (48V)	101Z0405							UL
BD250GH.2-HD (48V)	101Z0410							

UL / CB / VDE	= Combination possible, VDE, CB or UL approval
	= Combination possible, but no approval
	= Combination not possible

3.2
ELECTRONIC UNITS – TECHNICAL DATA

Technical data		Electronic units (code number)						
		BD, P-Housing						
		Standard (2nd generation) 101N0242	High Speed 101N0390	AEO 101N0340	Solar 101N0420	AC/DC converter 101N0510	Automotive 2nd generation) 101N0680	Telecom 101N0732
Approvals	Approvals and certificates *	–	–	UL/VDE/CB	UL/VDE/CB	UL/VDE	UL/ VDE/CB UN-ECE-R10	UL
	Type approval (E-marking) 2004/104/EC	–	–	–	–	e4 03 1588	–	–
	EU declaration 2014/30/EU and RoHS declaration 2011/65/EU	yes	yes	yes	yes	yes	yes	yes
	Further EMC tests	CISPR25/1 CISPR14	CISPR25/1	CISPR25/1	CISPR25/1	–	CISPR25/5	–
Supply voltage	DC supply voltage range (V)	(9) 9.6 – 17, 21.3 – 31.5	(9) 9.6 – 17, 21.3 – 31.5	(9) 9.6 – 17, 21.3 – 31.5	10 – 45	(9) 9.6 – 17, 21.3 – 31.5	(9) 9.6 – 17, 21.3 – 31.5	32 – 60
	AC supply voltage range (V)	–	–	–	–	100 –240	–	–
	Frequency (Hz)	–	–	–	–	50–60	–	–
	Fuses required for e.g. 12/24V DC usage (A)	15 / 7.5	30 / 15	15 / 7.5	15	15 / 7.5	15 / 7.5	15
	Fuse required AC usage	–	–	–	–	4	–	–
Environ-ments	Ambient temperature operation (°C)	55	55	55	55	55	55	55
	Ambient temp. during storage/transport (°C)	-40 to 85	-40 to 85	-40 to 85	-40 to 85	-40 to 85	-40 to 85	-40 to 85
Enclosure	IP Class	20	20	20	20	20	20	20
	Weight (kg)	0.19	0.26	0.19	0.19	0.40	0.19	0.24
Connectivity	Connectors	6.3 mm	6.3 mm	6.3 mm	6.3 mm	6.3 mm	6.3 mm	6.3 mm, Molex
	Fan (V/W_{max})	12 / 6	12 / 6	12 / 6	12 / 6	12 / 6	6 / 12	48 / 60+60
	NTC sensor	yes	yes	yes	yes	yes	yes	yes
	Bus communication	1 wire	1 wire	1 wire	1 wire	1 wire	1 wire	1 wire
	Light (V/W)	–	–	–	–	12 / 5	–	–
	LED (alarm)	yes	yes	yes	yes	yes	yes	–
	TOOL4COOL®	yes	yes	yes	yes	yes	yes	yes
	Setpoint selection (mechanical thermostat -M / (external resistor -R / TOOL4COOL® – T)	M / – / T	M / – / T	M / – / T	M / – / T	M / – / T	M / – / T	M / – / T

Technical data		Electronic units (code number)							
		BD, T-Housing					BD-Micro		
		101N8xxx-Series 101N0820+0800	101N8xxx-Series 101N0820+0810	101N8xxx-Series 101N0830	101N07xx-Series 101N0715	Telecom 101N0720	Variable Speed (VSD) 101N2130	Variable Speed (VSD) AC/DC conv. 101N5100	Automotive (AUTO) 101N1010
Approvals	Approvals and certificates *	–	–	–	–	–	–	UL	–
	Type approval (E-marking) 2004/104/EC	–	–	–	–	–	compliant	compliant	compliant
	EU declaration 2014/30/EU and RoHS declaration 2011/65/EU	yes	yes	yes	yes	yes	yes	yes	yes
	Further EMC tests	CISPR25/1	–	–	CISPR25/3	–	CISPR25/1	CISPR25/1	VW 80101
Supply voltage	DC supply voltage range (V)	9.6 – 17	19 – 31.5	9.6 – 17	19 – 31.5	32 – 60	9.6 – 17, 19 – 34	9.6 – 17, 19 – 34	8.5 – 17
	AC supply voltage range (V)	–	–	–	–	–	–	100 – 240	–
	Frequency (Hz)	–	–	–	–	–	–	50 – 60	–
	Fuses required for e.g. 12/24V DC usage (A)	30 + 2 x 60	15 + 2 x 30	60	30	15	15 / 7.5	15 / 7.5	12
	Fuse required AC usage	–	–	–	–	–	–	4	–
Environ-ments	Ambient temperature operation (°C)	55	55	55	55	55	55	55	55
	Ambient temp. during storage/transport (°C)	-40 to 85	-40 to 85	-40 to 85	-40 to 85	-40 to 85	-40 to 85	-40 to 85	-40 to 85
Enclosure	IP Class	20	20	20	20	20	42	42	40
	Weight (kg)	0.28 + 0.33	0.28 + 0.25	0.28	0.27	0.27	0.11	0.29	0.17
Connectivity	Connectors	6.3 spades, 9.5 mm spades	6.3 spades, 9.5 mm spades	6.3 spades, 9.5 mm spades	6.3 spades, 9.5 mm spades	6.3 mm, Molex	6.3 mm	6.3 mm	Tyco Electronics
	Fan (V/W_{max})	12–24 / 200+100	12–24 / 200+100	–	12+24 / 60+40	48 / 60+60	12 / 6	12 / 6	12 / 7.8
	NTC sensor	yes	yes	yes	yes	yes	yes	yes	yes
	Bus communication	1 wire, LIN, Modbus	1 wire, LIN, Modbus	1 wire	1 wire	1 wire	1 wire	1 wire	1 wire
	Light (V/W)	–	–	–	–	–	–	12 / 5	LED
	LED (alarm)	–	–	–	–	–	yes	yes	yes
	TOOL4COOL®	yes	yes	yes	yes	yes	yes	yes	yes
	Setpoint selection (mechanical thermostat -M / (external resistor -R / TOOL4COOL® – T)	M / – / T	M / – / T	M / – / T	M / – / T	M / – / T	M / R / T	M / R / T	M / R / T

* please refer to table: VDE/CB/UL approved compressor – electronic unit combinations

3.3
ELECTRONIC UNITS – HOUSINGS

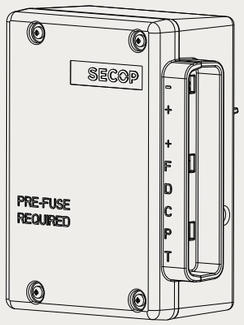

Standard AEO
101N0242 101N0340

Automotive Solar
101N0680 101N0420

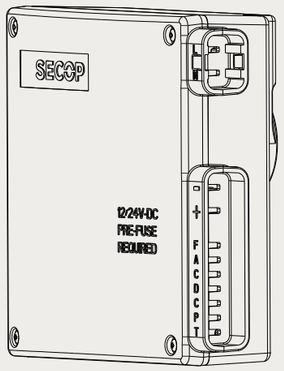

AC/DC converter
101N0510

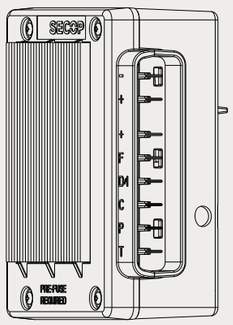

High Speed
101N0390

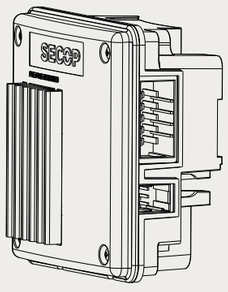

Automotive (AUTO)
101N1010

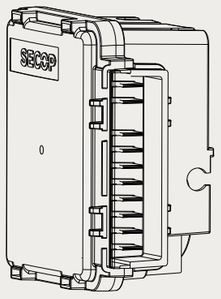

VSD
101N2130

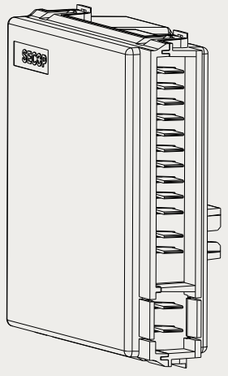

VSD w. AC/DC converter
101N5100

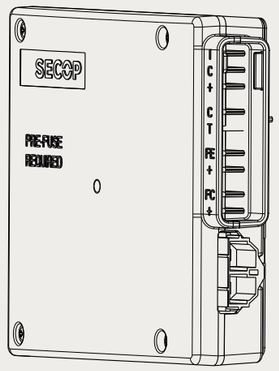

Telecom
101N0732

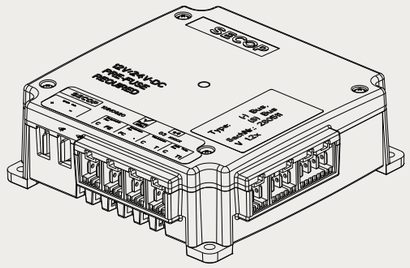

101N8xxx-Series
101N0800

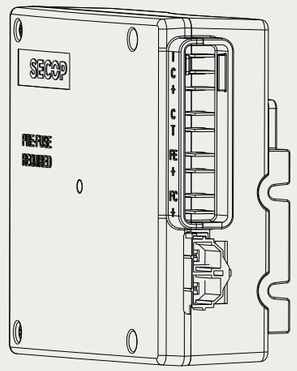

Telecom
101N0720

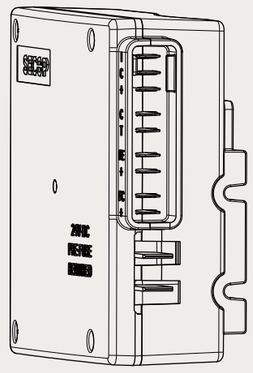

101N07xx-Series
101N0715

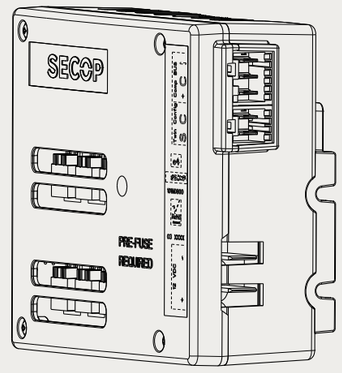

101N8xxx-Series
101N0810
101N0820
101N0830

3.4 ELECTRONIC UNITS – FEATURES

Secop BD compressors are fitted with brushless direct current motors (BLDCM) which are electronically commutated by an electronic unit.

The electronic unit is delivered separately and for most of the units, be mounted on the compressor. A few units must be mounted separately from the compressor. Please follow our Instructions. The electronic unit must always be connected directly to the battery poles or power supply unit terminals. For the protection of the installation an external fuse must be installed in the power supply cable close to the battery or power supply unit. If the chassis is used as a conductor, a proper connection between cable and chassis must be established. Wrong polarity applied to the electronic unit does not destroy the unit - however, the compressor will not work.

Some electronic units can run on either 12 V DC or 24 V DC. The electronic unit will be calibrated to the applied voltage. This means that if the battery voltage is less than 17 V, the electric unit assumes that it is working in a 12 V DC system. If the voltage is higher than 17 V DC the electronic unit assumes that it is working in a 24 V DC system. Voltages are measured on the power supply terminals of the electronic unit.

If the compressor is planned to be stopped for long periods, a main switch can be installed.

For detailed function descriptions of the individual unit please, refer to our Instructions for that specific unit.

3.4.1 VOLTAGE RANGES WITH COMPRESSORS

BD Compressors with various electronic units (P-Housing)	Voltage range
BD35F /-HD.2 /-B	9.6 – 31.5 V DC
BD35F AC/DC	85 – 265 V AC, 50/60 Hz
	9.6 – 31.5 V DC
BD35F Solar	9.6 – 45 V DC
BD50F	9.6 – 31.5 V DC
BD50F AC/DC	85 – 265 V AC, 50/60 Hz
	9.6 – 31.5 V DC
BD80F	9.6 – 31.5 V DC
BD35K	9.6 – 31.5 V DC
BD35K AC/DC	85 – 265 V AC, 50/60 Hz
	9.6 – 31.5 V DC
BD35K Solar	9.6 – 45 V DC
BD50K	9.6 – 31.5 V DC
BD80CN	9.6 – 31.5 V DC
BD100CN	9.6 – 31.5 V DC
BD250GH.2 12/24V	9.6 – 31.5 V DC
BD250GH.2 48V	32 – 60 V DC

BD Compressors with various electronic units (T-Housing)	Voltage range
BD350GH 24V	19 – 31.5 V DC
BD350GH 12/24V	9.6 – 31.5 V DC
BD350GH 48V	32 – 60 V DC
BD220CL	9.6 – 17 V DC

BD Compressors with various electronic units (Micro Series)	Voltage range
BD1.4F-AUTO.3	8.5 – 17 V DC
BD1.4F-VSD.2/.3	9.6 – 34 V DC
BD1.4F-VSD-HD	
BD1.4F-VSD.2 AC/DC	85 – 265 V AC, 50/60 Hz
	9.6 – 34 V DC

3.4.2 CABLE DIMENSIONS

To ensure correct starting and operating conditions, the cable dimensions must be observed and sized correctly.

We recommend a maximum voltage drop of 0.3 V in the cable between power supply source and supply terminals on the electronic module.

Calculation of voltage drop = 0.0175 ∗ (cable length in meter / cable square in mm^2) ∗ 2 ∗ current in Ampere

Example:

Cable length = 5 meter

Cable square = 4 mm^2

Current consumption = 6.5 A

Voltage drop = 0.0175 ∗ (5/4) ∗ 2 ∗ 6.5 = 0.28 V.

3.4.3 COMPRESSOR SPEED CONTROL

All BD compressors have brushless DC motors and therefore speed/capacity control can be made in an easy way. The applied voltage to the motor inside is proportional with compressor speed.

Note - the voltage applied to the motor inside the compressor is not the same as supply voltage!

On BD35F/K, BD50F/K, BD80F/CN, BD100CN and BD250GH.2 the speed can be set via an external resistor in series with the thermostat circuit between terminal C & T.

For further details on the different electronic units please refer to the Instruction and Data Sheets for specific models.

On electronic units with communication interface the speed can be selected via PC software Tool4Cool®. Depending on the electronic unit the speed range varies. All compressor models offer speed control by means of Tool4Cool® or by means of an external resistor.

Please refer to Instructions and Operating Instructions for specific units.

For each electronic unit there is a built in protection function for over and under speed which stops the compressor when these limits are exceeded.

3.4.4 THERMOSTAT CONNECTION

The electronic unit on the BD compressor can operate with normal mechanical type thermostats as used in refrigeration appliances, or with electronic thermostats. The thermostat is connected between the terminals C and T of the electronic unit. The compressor current does not flow through the thermostat contacts. When the thermostat is cut out there will still be power on to the electronic unit. A system with no stand-by power consumption can be established if the thermostat is replaced by a jumper between the terminals C and T, and the main switch is replaced by a thermostat. In this case the full current to the compressor flows through the thermostat, which must be rated accordingly.

Electronic units with communication interface have a built in electronic thermostat that controls the temperature via an NTC sensor connected to terminal C & T on the electronic unit. Recommended NTC sensor type Epcos M800/5K.

The thermostat can be adjusted via communication interface and PC software Tool4Cool®.

BD1.4F-VSD.2/.3 compressor model offers thermostat adjustment feature by means of PC software Tool4Cool® or by means of an external resistor.

For further details on thermostat function for the individual electronic units please refer to our Instructions.

3.4.5 ADAPTIVE ENERGY OPTIMIZATION (AEO) FUNCTION

The AEO function is very suitable for tropical applications, systems with huge load variations and applications where energy is an important issue. Furthermore it can be an advantage to use it when it is difficult to determine at what speed the compressor should run.

Customers producing condensing units see this as the preferred solution. The function will prevent short cycling of the compressor and thereby protect the battery. The AEO is built into electronic modules with separate code numbers.

The AEO function can be overruled by means of a resistor to set a fixed speed.

See Instructions for details on resistor size.

3.4.6 AEO FUNCTION FOR BD35F/K, BD50F, BD80F, BD250GH.2 AND BD100CN

If no resistors are connected between C and T, speed control is done by AEO. The AEO function can be adapted via four setpoint parameters:

- **AEO Runtime setpoint:**
  The target runtime for the compressor during cut-in
- **AEO Start speed at power up:**
  The start speed of compressor in AEO mode, overruled by fixed speed with 2500 rpm for 30 sec
- **AEO Max. ramp up time:**
  The maximum time that the speed is ramping up before reaching maximum speed for the
  compressor (3500 rpm for 101N0340 and 4400 rpm for 101N0390)
- **AEO Reduction of next start speed:**
  The parameter defines how much the next start speed shall be reduced at next thermostat cut-in

	Motor speed [rpm]	Resistor R1 [Ohm]
101N0340 101N0420 with AEO	AEO	0
	2000	173
	2500	450
	3000	865
	3500	1696

	Motor speed [rpm]	Resistor R1 [Ohm]
101N0390 with AEO	AEO	0
	2500	203
	3100	451
	3800	867
	4400	1700

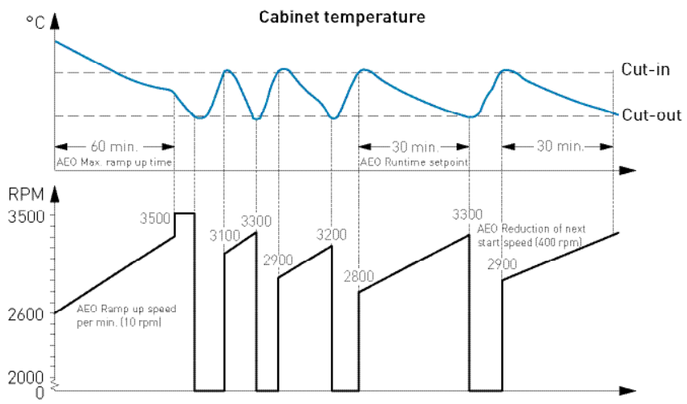

3.4.7 ECO FUNCTION

NTC and ECO Speed

"NTC and ECO speed set via Tool4Cool® / communication interface" would be used if a NTC is used to control the temperature inside the cabinet. This is the most advanced function of the new controllers. The compressor speed is automatically adapted to the current cooling requirement.

Operation in ECO mode reduces energy consumption and noise by controlling compressor speed as a function of temperature.

The Eco Temperature is automatically calculated to be in the middle between cut in temperature and cut out temperature:

- when operating below ECO temperature, compressors run at the set ECO speed (often 2000 rpm)
- when operating above ECO temperature, the compressors run at Requested speed (often 3500 rpm)

The temperatures can be adjusted in the "Thermostat" section within Tool4Cool®.

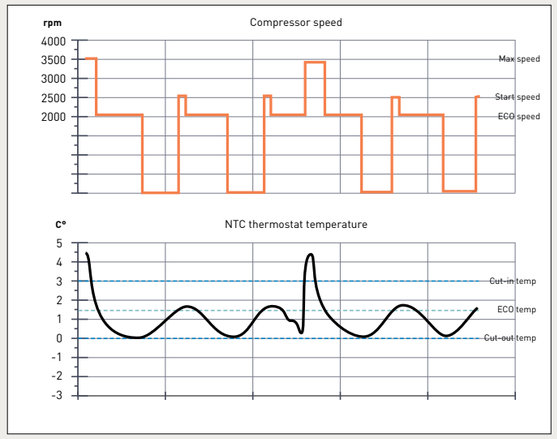

3.4.8 FAN CONNECTIONS

BD35F/K, BD50F/K, 80F/CN, 100CN and BD250GH.2

If a condenser fan is to be used, it must be connected to the electronic unit terminals + and F. Always use a 12V fan, even in 24V systems, as the electronic unit will automatically reduce the applied voltage to 12V for the fan.

The max. load on the electronic unit is 0.5A $_{avg}$ or 1A $_{peak}$.

The fan is allowed to start with a higher current for the first 2 seconds. If the fan becomes overloaded, both fan and compressor will be cut out by the overload protection.

BD350GH, BD220CL, BD250GH.2 48 V, and BD1.4F-xxx

Electronic units with communication interface via Tool4Cool® have fan speed control in the range from 40 to 100 % controlled via a PWM signal.

Some of these controllers have the possibility to control both a condenser and evaporator fan via 2 fan outlets on the electronic unit.

Besides speed control it is possible to define a start and stop delay of the fans related to thermostat function.

The table below shows the different settings that can be made via PC software Tool4Cool®. This varies from unit to unit.

Name	Default	Max. value	Min. value	Step	Unit
Cond. Fan voltage	24	31	12	1	Volt
Fan speed	100	100	40	10	%
Fan start delay	0	240	0	1	Seconds
Fan stop delay	0	240	0	1	Seconds
Fan forced ON	OFF	ON	OFF	1	–
Detect missing fan	OFF	ON	OFF	1	–

3.4.9 FAN OUTPUT POWER

Electronic Unit Code number	Fan output (Watt) and voltage (V)
101N0242	6 / 12
101N0390	5 / 12
101N0340	6 / 12
101N0420	6 / 12
101N0510	6 / 12
101N0680	6 / 12

Electronic Unit Code number	Fan output (Watt) and voltage (V)
101N0715	60/40 / 12 or 24
101N0720	60 / 48
101N0732	60 / 48
101N0800	100/200 / 12
101N0810	100/200 / 24

Electronic Unit Code number	Fan output (Watt) and voltage (V)
101N1010	6 / 12
101N2130	6 / 12
101N5100	6 / 12

3.4.10 LAMP CONNECTION

A 12V DC 5 Watt lamp can be connected between the terminals A and C on electronic unit 101N0510 and 101N5100. The output voltage between the terminals A and C is always regulated to 12V DC. A 12V DC lamp must be used for both 12V and 24V power supply systems. The lamp output can supply a continuous current of 0.5A $_{avg}$

3.4.11 FAULT DETECTION AND DIAGNOSIS

BD35F/K, BD50F/K, 80F/CN, 100CN and BD250GH.2 12/24 V

To diagnose why a compressor comes to an unintended stop, it is recommended to have a 10 mA Light Emitting Diode (LED) installed between the terminals + and D. Provided that the electronic unit is properly connected to the power supply, and the thermostat is on, the number of flashes depends on what kind of operational error was recorded. Each flash will last ¼ second. After the actual number of flashes there will be a delay with no flashes, so that the sequence for each error recording is repeated every 4 seconds.

LED flashes when:

- Battery voltage low: Battery must be charged. Hereafter start delay of 60 sec
- Fan is overloaded: Restart made after 60 sec
- Motor start error: Restart made after 60 sec
- Compressor speed too low: Restart made after 60 sec
- PCB temperature too high: Temperature must be below 90 / 100 °C. Hereafter delay of 60 sec

Electronic unit with communications interface via Tool4Cool® shows actual alarm message on the PC screen. Alarm messages (depending on electronic unit):

- No error
- Voltage failure
- Fan failure
- Motor failure
- Min. speed failure
- Max. speed failure
- Thermal failure
- NTC Sensor Failure

Some units also offer the possibility to connect an LED in order to get a flash pattern to identify the error.

For details please refer to the Instructions for a specific unit.

3.4.12 OVERLOAD PROTECTIONS

In order to protect the electronic unit from destruction due to overheating a built in temperature sensor monitors the PCB temperature.

If the temperature exceeds 100 °C the compressor is stopped until the PCB temperature has dropped below 90 °C. For the electronic units 101N0242 and 101N0680 the temperature limits are 10 °C above these values. The compressor is stopped until the PCB temperature has dropped below 100 °C. Hereafter the compressor will start again with a delay of approx. 1 minute (depends on the electronic unit).

The heat influencing the PCB comes from its surrounding temperature and the temperature generated in the PCB due to load, meaning that a higher load is possible when surrounding temperature is low and vice versa.

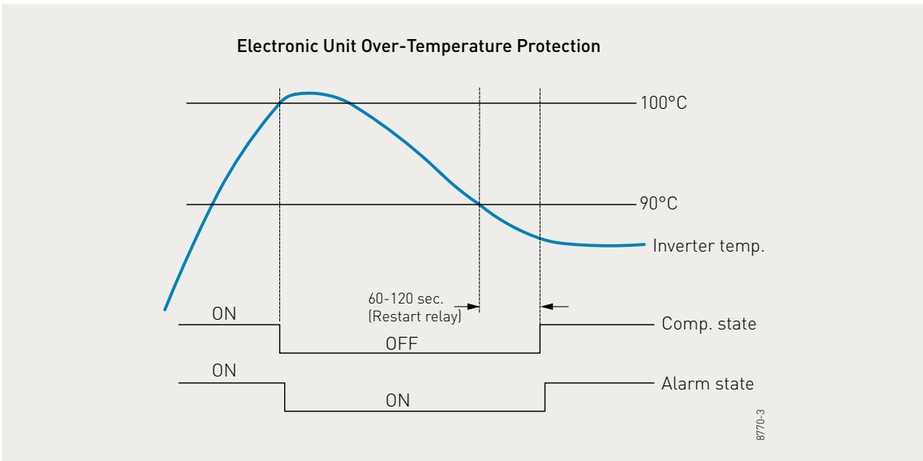

101N0242, 101N0340. 101N0390, 101N0420, 101N0510

When the unit reaches 110 °C the system will shut down and an alarm error **(Alarm 6: Thermal failure)** will be sent.

The system restarts automatically after the temperature has dropped below 100 °C.
Hereafter the set delay **Compressor restart delay** must be terminated. The default duration is 60 sec.

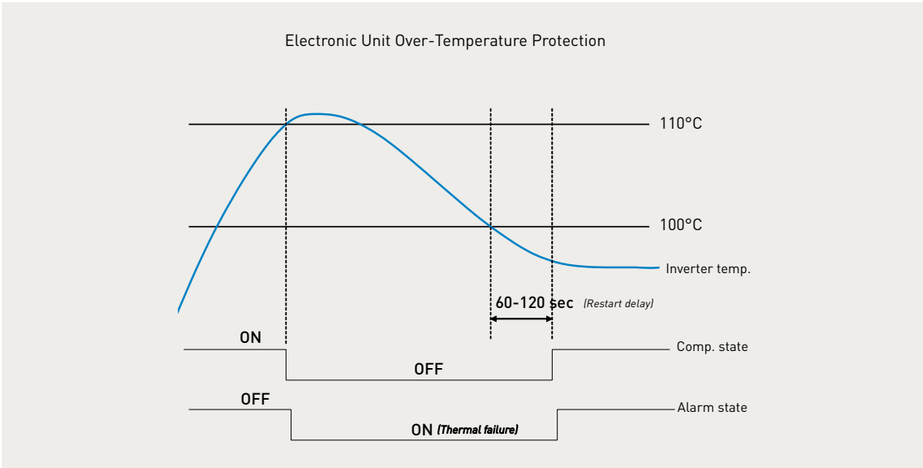

3.4.13 BATTERY PROTECTION

The battery protection prevents permanent damage to the battery by discharge.

The setting range is 9–17 V DC for 12 V DC systems, and 19 to 27 V DC for 24 V DC systems.
The cut out values and cut in differences can be set individual for 12 V systems and 24 V systems.
Battery protection function is disabled in Solar controller 101N0420 (fixed range 10 to 45 V DC).

If the voltage remains below the cut-out voltage for the time specified in the parameter "Cut-out delay" (default 3s), compressor and fan are stopped.

Compressor and fan are stopped immediately, if the voltage drops below 8 V in 12 V systems and below 18 V in 24 V systems (critical stop).

If Solar mode is enabled, the electronic will be able to run over the entire input voltage range (9-32 V), without stopping between 12 V and 24 V range.

Tolerances are ± 0.30 V DC.

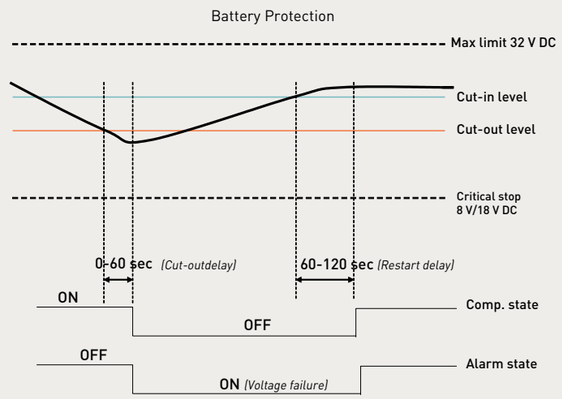

Settings

Name	Default	Max value	Min value	Step	Unit
Battery cutout level 12 V DC	10.4	17	9	0.1	Volt
Battery cut-in diff. 12 V DC	1.3	10	0.5	0.1	Volt
Battery cut-out level 24 V DC	22.8	32	19	0.1	Volt
Battery cut-in diff. 24 V DC	1.3	10	0.5	0.1	Volt
Battery Solar mode on/off	Disable	Enable	Disable	–	–
Cutout delay	3	60	0	1	Seconds

3.4.13.1 BATTERY PROTECTION FOR ELECTRONIC UNITS 101N0242, 101N0390, 101N0340, 101N0510, AND 101N0680

Standard battery protection settings

12V cut-out [V]	12V cut-in [V]	24V cut-out [V]	24V cut-in [V]
10.4	11.7	22.8	24.2

Optional battery protection settings

Resistor [kΩ]	12V cut-out	12V cut-in	12V max.	24V cut-out	24V cut-in	24V max.
terminals C - P	[V]	[V]	Voltage	[V]	[V]	Voltage [V]
0	9.6	10.9	17.0	21.3	22.7	31.5
1.6	9.7	11.0	17.0	21.5	22.9	31.5
2.4	9.9	11.1	17.0	21.8	23.2	31.5
3.6	10.0	11.3	17.0	22.0	23.4	31.5
4.7	10.1	11.4	17.0	22.3	23.7	31.5
6.2	10.2	11.5	17.0	22.5	23.9	31.5
8.2	10.4	11.7	17.0	22.8	24.2	31.5
11	10.5	11.8	17.0	23.0	24.5	31.5
14	10.6	11.9	17.0	23.3	24.7	31.5
18	10.8	12.0	17.0	23.6	25.0	31.5
24	10.9	12.2	17.0	23.8	25.2	31.5
33	11.0	12.3	17.0	24.1	25.5	31.5
47	11.1	12.4	17.0	24.3	25.7	31.5
82	11.3	12.5	17.0	24.6	26.0	31.5
220	9.6	10.9				31.5

3.4.13.2 BATTERY PROTECTION FOR ELECTRONIC UNIT 101N1010

Standard battery protection settings

12V cut-out [V]	12V cut-in [V]
8.5	9.0

Optional battery protections settings

Resistor [kΩ]	12V cut-out	12V cut-in	12V max.
terminals S2 - C	[V]	[V]	Voltage [V]
0	9.60	10.90	17.0
0.17	9.73	11.03	17.0
0.34	9.86	11.16	17.0
0.54	10.00	11.30	17.0
0.75	10.12	11.42	17.0
0.97	10.25	11.55	17.0
1.23	10.38	11.68	17.0
1.50	10.52	11.82	17.0
1.81	10.65	11.95	17.0
2.15	10.78	12.08	17.0
2.53	10.91	12.21	17.0
2.96	11.04	12.34	17.0
3.44	11.17	12.47	17.0
3.99	11.30	12.60	17.0

3.4.13.3 STANDARD BATTERY PROTECTION SETTINGS FOR ELECTRONIC UNITS 101N2130 / 101N5100

Voltage (0.1 steps)				Min. value	Default
12V	± 0.3V DC, all values	Cut-out	VDC	9.6	10.4
		Cut-in diff.	VDC	0.5	1.3
24V	± 0.3V DC, all values	Cut-out	VDC	19	21.3
		Cut-in diff.	VDC	0.5	1.3

3.4.13.4 OPTIONAL BATTERY PROTECTION SETTINGS FOR ELECTRONIC UNITS 101N2130 / 101N5100

Resistor [kΩ] terminals C – P	Duty Cycle [%]	Speed [RPM]	Cut-out level [V]	Cut-in level [V]	Cut-out level [V]	Cut-in level [V]	
open	0	Maintain	Maintain current value. Can be changed via Modbus				
220	3	–	Maintain current value. Can be changed via Modbus				ITC
130	6	–	Maintain current value. Can be changed via Modbus				ITC off
91	9	–	Maintain current value. Can be changed via Modbus				ECO
68	12	–	Maintain current value. Can be changed via Modbus				ECO off
51	15		9.6 – 34 V DC				Solar
43	18		Default				Solar off
36	21		Reset battery only				
30	24		Reset battery and speed to default value				
27	27	4000	Maintain current value. Can be changed via Modbus				
22	30	4000	9.6	10.9	21.3	22.6	
20	33	4000	10.1	11.4	22.3	23.6	
18	36	4000	11.1	12.4	23.3	24.6	
15	39	4000	12.1	13.4	24.3	25.6	
13	42	3500	Maintain current value. Can be changed via Modbus				
12	45	3500	9.6	10.9	21.3	22.6	
11	48	3500	10.1	11.4	22.3	23.6	
9.1	51	3500	11.1	12.4	23.3	24.6	
8.2	54	3500	12.1	13.4	24.3	25.6	
7.5	57	3000	Maintain current value. Can be changed via Modbus				
6.2	60	3000	9.6	10.9	21.3	22.6	
5.6	63	3000	10.1	11.4	22.3	23.6	
5.1	66	3000	11.1	12.4	23.3	24.6	
4.3	69	3000	12.1	13.4	24.3	25.6	
3.9	72	2500	Maintain current value. Can be changed via Modbus				
3.3	75	2500	9.6	10.9	21.3	22.6	
2.7	78	2500	10.1	11.4	22.3	23.6	
2.2	81	2500	11.1	12.4	23.3	24.6	
1.8	84	2500	12.1	13.4	24.3	25.6	
1.5	87	2000	Maintain current value. Can be changed via Modbus				
1.0	90	2000	9.6	10.9	21.3	22.6	
0.68	93	2000	10.1	11.4	22.3	23.6	
0.36	96	2000	11.1	12.4	23.3	24.6	
0.051	99	2000	12.1	13.4	24.3	25.6	

3.4.14 SET POINT SELECTION DURING STANDALONE OPERATION (W/O TOOL4COOL®) FOR ELECTRONIC UNIT 101N2130

Set point [°C]	R2 [Ohm]	Set point [°C]	R2 [Ohm]	Set point [°C]	R2 [Ohm]	Set point [°C]	R2 [Ohm]
-20	0	-12	2667	-4	5333	4	8000
-19	333	-11	3000	-3	5667	5	8333
-18	667	-10	3333	-2	6000	6	8667
-17	1000	-9	3667	-1	6333	7	9000
-16	1333	-8	4000	0	6667	8	9333
-15	1667	-7	4333	1	7000	9	9667
-14	2000	-6	4667	2	7333	10	10000
-13	2333	-5	5000	3	7667		

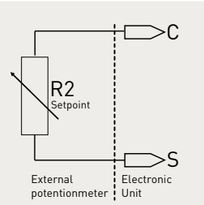

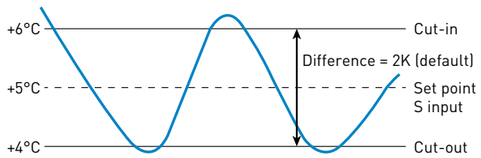

Example: R2 = 8330 Ω ~ +5°C
Difference 2K (default value, can be changed via T4C)
Cut-out = +4°C
Cut-in = +6°C

- Cut-out value will be written into EEPROM
- If R2 resistor is removed, Cut-out will continue to be 4°C and difference 2K

In order to utilize the integrated temperature control, connect a 10K potentiometer (or fixed resistor), between S and C (R2). Via the resistance, a temperature set point between -20 °C and 10 °C can be selected as per the table above.

The resistance adjusts the temperature set point around which the Cut-in and Cut-out occurs. It is defined as the average value between Cut-in and Cut-out.

The temperature set point will not change the Cut-in difference, but only adjust the Cut-out based on the temperature set point and the actual Cut-in diff setting.
(Cut-out = temperature set point – Cut-in diff / 2).

3.4.15 MOUNTING THE ELECTRONIC UNIT

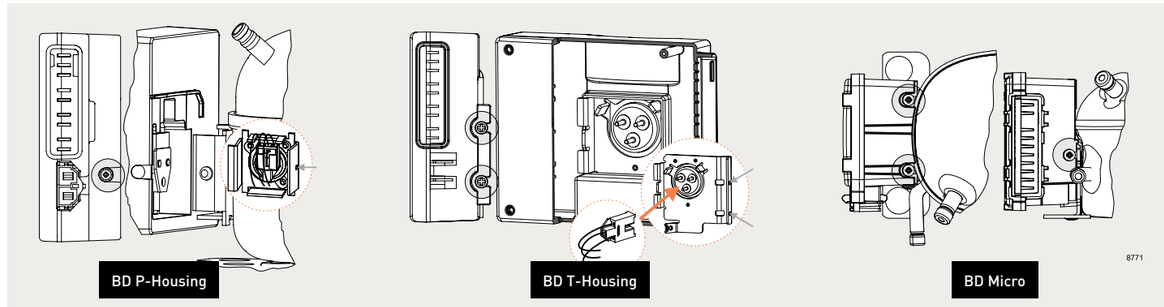

BD P-Housing

The cable plug of the electronic unit is mounted on the pins of the current lead-in on the compressor.

Then the electronic unit itself is mounted on the bracket of the compressor. At first the left side is mounted, then the right side is pressed over the screw on the bracket (sideways, marked in grey). The electronic unit snaps on to the bracket and is now securely mounted on the compressor. Earth connection (via compressor baseplate) can be used if required.

BD T-Housing

Connect the terminal plug from the electronic unit to the compressor terminal. Mount the electronic unit on the compressor and fix it with two screws (sideways, marked in grey).

BD Micro

Mount the electronic unit directly on the compressor plug and fix it with two screws (sideways or from above, marked in grey)

3.4.16 MOUNTING THE REMOTE KIT

The remote kit was originally designed to be used together with the BD250GH twin compressor.
It is applicable to all electronic units used with the BD P-Housing compressor platform.
The remote kit supports in mounting the electronic unit in small machine compartments.
The electronits unit can be placed next to the compressor.

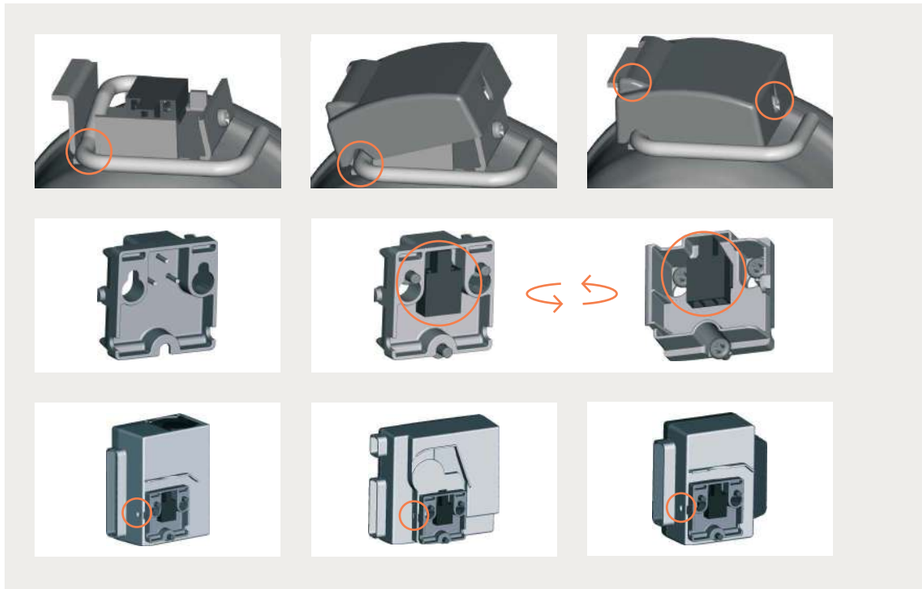

3.5 PRECONDITION FOR LONG OPERATING LIFE

In order to achieve trouble free operation and long operating life for a hermetic compressor, the following preconditions should be observed:

1. Sufficient starting torque of the compressor motor to allow the motor to start at the pressure conditions in the refrigeration system.
2. Sufficient breakdown torque to allow the motor to handle the load conditions at start up and during operation.
3. When the refrigeration system is in operation, the temperature in the compressor should not rise to levels which could damage its components. Consequently, condensing and compression temperatures should be kept as low as possible.
4. Precise dimensioning of the refrigeration system in question and careful evaluation of the operating conditions of the compressor at expected maximum loads.
5. Sufficient cleanliness and low residual humidity in the circuit.

3.5.1 MOTOR OVERLOAD

Compressor start up is influenced by the starting and/ or breakdown torque of the motor. If starting and/ or breakdown torque is insufficient, the compressor either cannot start or the start will be hampered and delayed because the motor protector is activated. Repeated start attempts subject the motor to overload, which sooner or later will result in failure. Faults of this kind can mostly be avoided by using the correct compressor/ motor combination. Secop offers the best solution for nearly all applications. It is a question of selecting the correct compressor for difficult fields of application.

3.5.2 THERMAL OVERLOAD

Operating conditions resulting in thermal decomposition of the materials used in the compressor must be avoided to ensure long compressor life. The materials relevant in this relation are motor insulation, refrigerant and oil.

The motor insulation consists of the insulating enamel for the copper wires, the slot liner of the stator iron, bandages and feeder cables.

As early as 1960, Secop (Danfoss Compressors) introduced fully synthetic insulation materials on all its compressors and the enamel for the wire insulation and the insulating system itself has improved continuously ever since. The result is constantly improved protection against motor overload. Like all other CFC gases, R12 and R502 were found to be harmful to the environment and were consequently prohibited. These refrigerants were used together with mineral oils. A so called Spauschus reaction between oil and refrigerant could consequently occur at high temperatures, which led to valve coking, especially at high residual humidity.

3.6 DESIGN LIMITS

In order to secure a satisfying lifetime of the compressor, some design criteria for the appliances must be fulfilled. Both the condensing temperature and the compressor temperature should be kept as low as possible. This can be done by using well dimensioned condenser surfaces and by ensuring good ventilation around the compressor under all operating conditions.

In order to protect the compressor against overload, the compressor must start and work properly through pressure peaks obtained in the highest ambient temperature and lowest working voltage. These limitations ensure a protection of valves, gaskets, oil, and motor insulation. Refrigerants R134a, R404A or R507 need polyester oils (POE).

Because of these oil types and the application of the above mentioned refrigerants there is – in practice – no longer any danger of valve coking.

Restrictions on condensing and motor temperatures are now set to protect the motor and thus increase its life.

For the application of Secop compressors in household, commercial and mobile refrigeration using the available refrigerants, we recommend the following rules to be observed:

3.6.1 COIL TEMPERATURE

Coil temperature must not exceed 125°C during continuous operation.

For limited periods of time, e.g. during compressor start up or in the case of short load peaks, the temperature should not exceed 135°C.

For commercial refrigeration with R134a the same limits as for household refrigeration apply.

However, fan cooling of the compressor is recommended.

3.6.2 CONDENSING TEMPERATURE

When using R600a or R134a the condensing temperature during continuous operation must not exceed 60°C. During limited load peaks the temperature must not exceed 70°C. In commercial refrigeration using R404A and R507 the condensing temperature limit is 55°C during continuous operation and 60°C in the case of load peaks.

3.7 MOISTURE AND IMPURITIES/ FILTER DRIER SELECTION

The compressors are dried to a maximum moisture content of 60 to 75 mg depending on the compressor size. The maximum impurity content is 40 to 50 mg depending on the compressor size.

Secop compressors leave the factories with a moisture load less or equal 125 ppm. This ppm rate includes a safety factor for a storing time up to one year or longer. In addiction of storing time and storing conditions the moisture level will increase. A level between 200 and 250 ppm in general is not critical and will not harm the compressors or systems, where the compressors will be implemented.

Measurement method

Test parameters	Demand
Conditioning	24 h, room temperature
Condition of compressor	charged with oil
Measurement temperature	room temperature
Measurement time	1-2 min
Medium	dew point
Measurement cell	electrical hydrometer
Demand	max.125 ppm H_2O

With this measurement method, the total moisture in the air volume will be measured. The water, which is fixed in the plastic structure and the oil, will only be measured indirectly. Within 24 hours equilibrium between the humidity contents of the air and compressor parts is reached.

The limit of 125 ppm is very low, if we consider that the surrounding air contains approx. 8000 ppm at 22°C and a relative humidity load of 40 %.

3.7.1 FILTER DRIER SELECTION

Only filter driers which are declared by the manufacturer to be suitable for mobile applications must be used in refrigeration systems with BD compressors. Filter material powder ending up in the compressor will lead to excessive wear of the piston and transmission parts, and metal particles deposited in the motor windings will cause the compressor to stop because the electric signal back to the electronic unit is disturbed.

The common desiccant is a molecular sieve, a zeolite. For R134a, R404A, R290 and R600a a material with 3 Å pores is recommended, e.g. UOP, XH 9 or XH 11, Grace 594, CECA Siliporite H3R. Pencil driers for R134a can possibly be used for R290, if they are tested according to IEC / EN 60 335 burst pressure demands.

In systems using a TEV valve it can be recommend using a combo drier, which is a drier with a free volume that functions as receiver.

3.8 CONDITION AT DELIVERY/ WARNINGS

The compressors are delivered without mounted starting devices on pallets. The standard pack can be stacked and is intended for transport by forklift truck. The bottom pallet has the dimensions 1144 x 800 mm.

Quantities per pallets are specified in the individual data sheets.

Electrical equipment is packed in separate boxes.

The most important performance controls carried out during manufacturing are,

- A high potential insulation test with 1650 V for 1 second
- Pumping capacity
- Tightness of discharge side and discharge valve
- Tightness of compressor housing
- Check of the right oil charge
- Noise test

The compressors are supplied with sealed connectors and the sealing should not be removed before the system assembly takes place. (max. 15 minutes with open connectors).

The compressors are supplied charged with dried and degassed oil, which is normally sufficient for the lifetime of the compressor. The refrigeration systems and the system components must be dimensioned in such a way that the oil can be lead back continuously to the compressor housing without accumulating in the system, e.g. without the oil pockets and with sufficient gas velocity. The compressors use polyolester or mineral oils and are approved only for these oils and **for the refrigerant to be used.** The oil charge is specified in the individual data sheets.

A high potential test with 1650V for 1 second is carried out on all compressors before delivery.

No high potential test or start tests must be carried out while the compressor is under vacuum.

No attempt must be made to start the compressor without a complete starting device.

Allow the compressor to reach a temperature above 10°C before starting the first time in order to avoid starting problems.

Anti freeze agents must not be used in the compressors as such agents are damaging to several of the materials used. In particular, the ethyl or methyl alcohol contents of such anti freeze agents have a destructive effect on the synthetic motor insulation

3.9 VARIABLE-SPEED COMPRESSORS – CAPILLARY & CHARGE DETERMINATION

CAPILLARY | CHARGE DETERMINATION

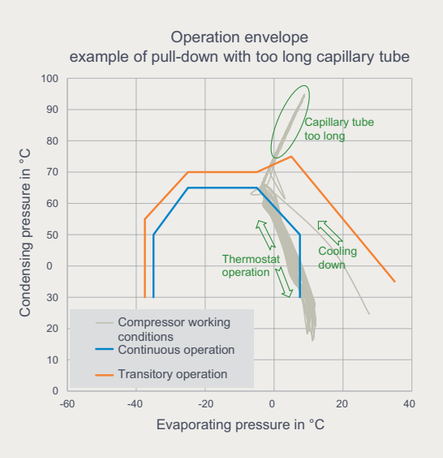

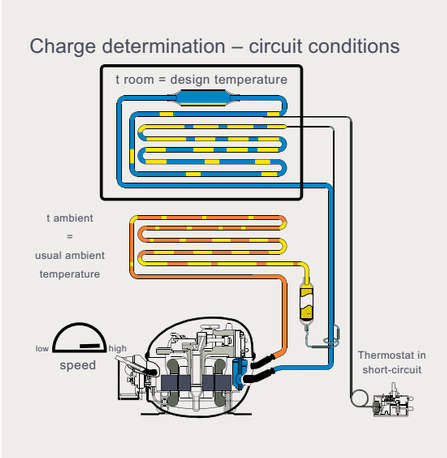

The capillary tube is generally the counterpart for the compressor. It can be optimized for only one working condition. So it has to be determined for the appliance working conditions and fit to the compressor size. The subcooling in front of the capillary inlet should be at least 1 K. The capillary has to be adapted to:

- → Refrigerant
- → Refrigeration capacity at working conditions
- → Suction tube length

The recommended capillary tube length is around 2 meters, then a sufficient internal heat exchanger can be built-in connection with the suction tube.

a) To provide a high level of energy efficiency, the capillary tube should be determined at the cabinet running conditions which appear under energy efficiency measurements. As variable speed compressors are usually optimized for low speed, these running conditions should also be at low compressor speed.

b) For high pull-down speed, the capillary tube can be calculated at the same running conditions as for energy efficiency but with maximum compressor running speed.

c) After each calculation, the capillary tube has to be tested for fitting to the appliance.
If too high condensing pressure levels occur in pull-down, then the capillary tube length has to be shortened (see the following diagram).
In addition, too small condenser areas can lead to unallowed high condensing temperatures.

d) Once the capillary tube has been designed, the refrigerant charge has to be determined.

Determining the charge can be done when the following points are fulfilled:

- → System components are selected
- → Capillary tube size is fixed

Then the charge determination should be done during continuous operation within the main appliance (running condition at normal ambient temperature[1] and at maximum compressor speed[2]).

When conducting the test, the following parameters should be measured to get an overview of the appliance running conditions:

- → Compressor power consumption
- → Compressor speed
- → Return gas temperature of the compressor
- → Temperature of the evaporator inlet, middle, and outlet

The test is started using a lower charge. Afterwards, the filling has to be increased stepwise until there is a small overcharge. The following diagram indicates in which area the charge is okay.

[1] With higher ambient temperatures less refrigerant charge is necessary due to higher thermal load in the evaporator.

[2] At maximum compressor speed the lowest refrigerant charge is necessary for the system.

THERMOSTAT OPERATION MODE

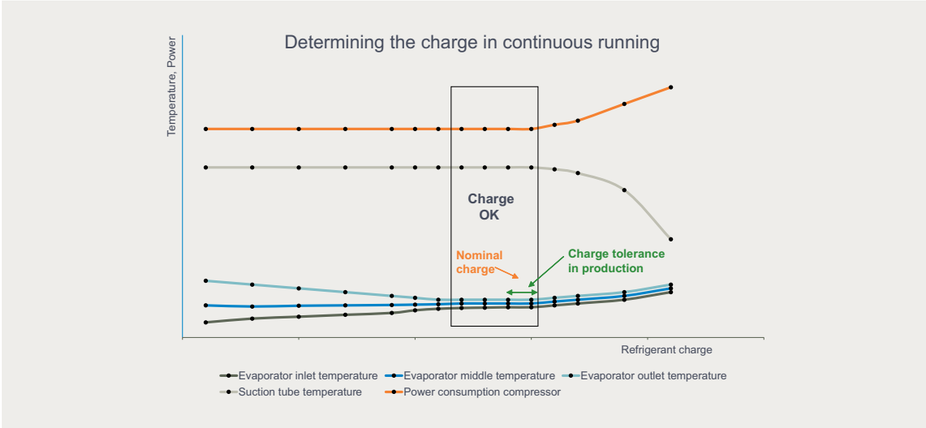

Followed by the charge determination in continuous running the appliance should be checked in thermostat operation mode. The compressor should run for several running cycles in thermostat operation mode.

Afterwards there must be superheating for all conditions. Otherwise, the liquid enters the compressor from the evaporator. Then the optimal charge has to be adapted to a lower charge.

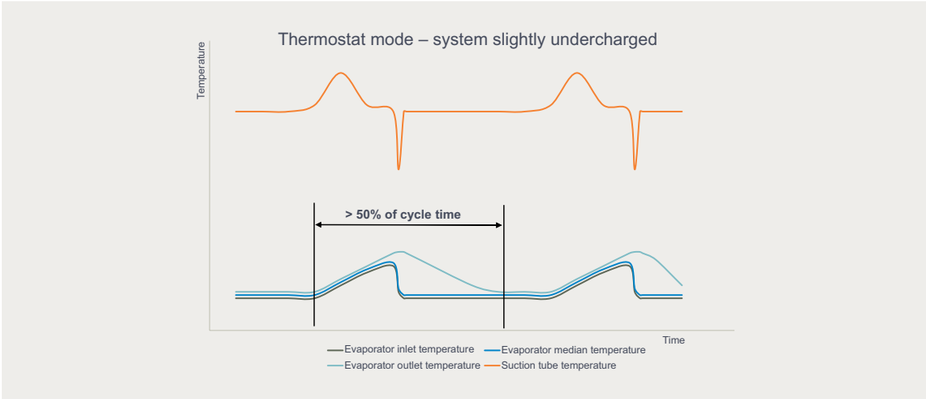

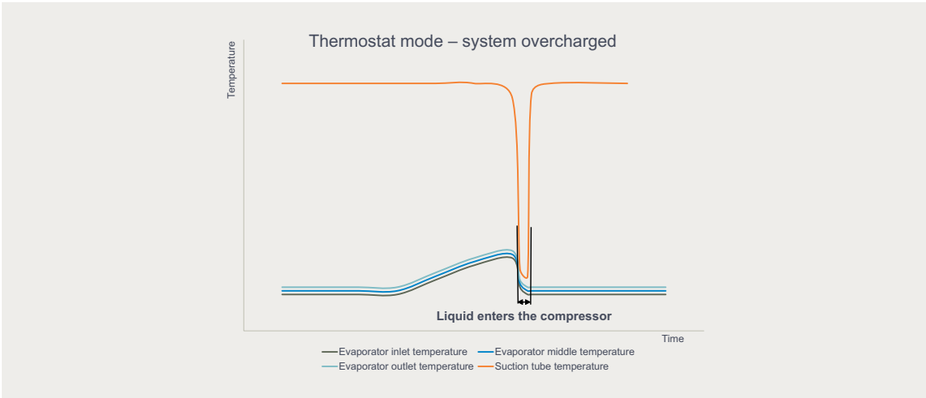

CAPILLARY TUBE SIZE AND REFRIGERANT CHARGE

Measurements showed, that different capillary tube size within the same cabinet leads to a different refrigerant charge required.

Capillary tube size	Capillary volume flow	Refrigerant charge
long	low	more
medium	average	average
short	high	less

3.10 MAX. REFRIGERANT CHARGE

R134a, R600a, R290, AND R404A/R507

Only the refrigerant amount which is necessary for the system to function must be charged. The refrigerant amount may be critical, regarding oil foaming and liquid hammer after long standstill periods. Because of this, limitations of refrigerant charges have been introduced.

If the permissible limit of refrigerant charge stated in the compressor data sheet is exceeded the oil will foam in the compressor after a cold start and may result in a damaged valve system in the compressor. The refrigerant charge must never exceed the amount that can be contained in the condenser side of the system.

If these limitations cannot be complied with, the risk may be reduced if a crankcase heater is properly used

or if a pump down system is established.

Please refer to the compressor data sheets, as the maximum refrigerant charge may deviate on single types from the statements in the form. The maximum charge of 150g for R600a, R290 and R1234yf is an upper safety limit of the appliance standards, whereas the other weights are stated to avoid liquid hammer.

Compressor type	Max. refrigerant charge				
	R134a	R1234yf	R600a	R290	R404A/R507
BD, P-Housing	300 g	150 g	120 g	120 g	–
BD, T-Housing	400 g	150 g	–	–	400 g
BD Micro	70 g	70 g	–	–	–

According to the European Standard EN 60335-2-24 or draft IEC 60335-2-89, which must be complied with, the refrigerant charge must not exceed 150g.

Commercially available R600a and R290 must not be used because the fuel grades of these products are of a variable composition. These products may also contain impurities which could significantly reduce the reliability and performance of the system and lead to premature failure. All Secop compressors for R600a and R290 are released for a base purity of 97 % or better. Impurity limits shall comply with DIN 8960 of 1998 (extended version of ISO 916).

All users of refrigerant R600a should refer to the chemical data safety sheets for full information on the safe handling of R600a and R290.

In general the charge of R600a or R290 is approximately 40-50 % by weight than that for HFC.

The refrigerant charge must never be too large to be contained on the condenser side of the refrigeration system. Only the refrigerant amount which is necessary for the system to function must be charged.

3.11 CONVERSIONS

FROM R404A TO R452A

At Secop, product development is focused on high efficiency and eco-friendly products. We believe – as all the major market stakeholders – that hydrocarbon refrigerants (isobutane R600a and propane R290) are the best solution for DC-powered applications.

The use of R404A is under pressure due to global regulations, however special attention is given to F-gas regulation in Europe. Secop recommends the move to hydrocarbon refrigerant solutions (R600a and R290) which perfectly meet the increasing market demand for high efficiency while utilizing natural refrigerants with very low GWPs.

We understand that there is a transition period, where specific applications will use different refrigerants while application redesign to hydrocarbons is not possible in a short time. Tests have so far shown good results with refrigerant R452A as a drop-in replacement for R404A.

Based on this information, Secop allows the use of R452A on all its R404A released compressors. It is the customer's responsibility to validate the application and they should carefully consider the requirements and constrains when changing the R404A to R452A in their application.

(Please refer to Product Bulletin "Refrigerant R452A in Secop Compressors")

FROM R134a TO R600a OR R290

Conversions from refrigerants R134a to R600a are not permitted as 1:1 replacements, as the refrigerator must be approved for operation with flammable refrigerants, and the electrical safety has to be tested according to existing standards. The same applies to conversions from refrigerants R502 or R134a to R290.

In many cases of transition from non-flammable to flammable refrigerants the appliance cabinet must be modified for safety or other reasons.

Refrigerant containing system parts according to IEC / EN 60335 must withstand a specified pressure without leaking. High pressure side must withstand saturation overpressure of 70 °C times 3.5, low pressure side must withstand saturation overpressure of 20 °C times 5.

Secop (formerly Danfoss Compressors) has been a pioneer and early adopter of hydrocarbons as refrigerants and offers a variety of suitable compressors for R600a and R290.

(Please refer to Application Guideline "Practical Application of Refrigerants R600a and R290 in Small Hermetic Systems").

FROM R134a TO R1234yf OR R513A AND R452A

R1234yf is a future refrigerant candidate in auto air conditioning replacing R134a. Likewise it might be used in DC-powered applications where redesign of the system to propane is not possible.

R1234yf is classified as flammable in the relevant safety standards. It is more expensive than R134a, however holds remarkably less greenhouse potential than R134a.

Our R134a compressors can be used for testing with this refrigerant and we are ready to support you in your investigation and approval procedure.

Investigations on material compatibility have so far shown good results with refrigerant R1234yf in Secop R134a compressors. These results must be confirmed in the ongoing long term tests.

At present, testing system performance can be carried out with the compressors originally designed for R134a. The same application limits as described on the R134a data sheet may be used.

The compressors designed for R134a do currently (03/2020) not have a safety approval for flammable refrigerants like R1234yf, but might be available in approved variants within the near future.

(Please refer to Product Bulletin "Refrigerant R1234yf in Secop Compressors")

Various new refrigerant types have been developed by the chemical industry to offer alternative solutions to hydrocarbons while some high-GWP refrigerants are to be phased out due to global regulations.

R513A and R452A are refrigerants which are designed to work as "drop-in" or replacement refrigerants for R134a and R404A. Secop ran development projects to verify that existing compressor types are compatible with these new refrigerants. As a result, most of Secop R134a compressors have now been additionally released for R513A and most R404A compressors have been released for R452A (all including approvals by the relevant authorities).

(Please refer to Product Bulletin "Multi-Refrigerant Release of Secop Compressor Types, R513A and R452A")

3.12 MOUNTING THE COMPRESSOR

Brazing problems caused by oil in the connectors can be avoided by placing the compressor on its base plate some time before brazing it into the system.

The compressor must never be placed upside down when mounting the rubber grommets in the base plate. Instead place the compressor on its side with

the connectors upwards.

The system should be closed within 15 minutes to avoid moisture and dirt penetration.

Tightening torque for M6 bolt joint mountings should be 5 Nm ± 0,5 (hand-tight).

The positions of connectors are found in the sketches. **C** means suction and must always be connected to the suction line. **E** means discharge and must be connected to the discharge line. **D** means process and is used for processing the system.

12.1 CONNECTOR POSITIONS

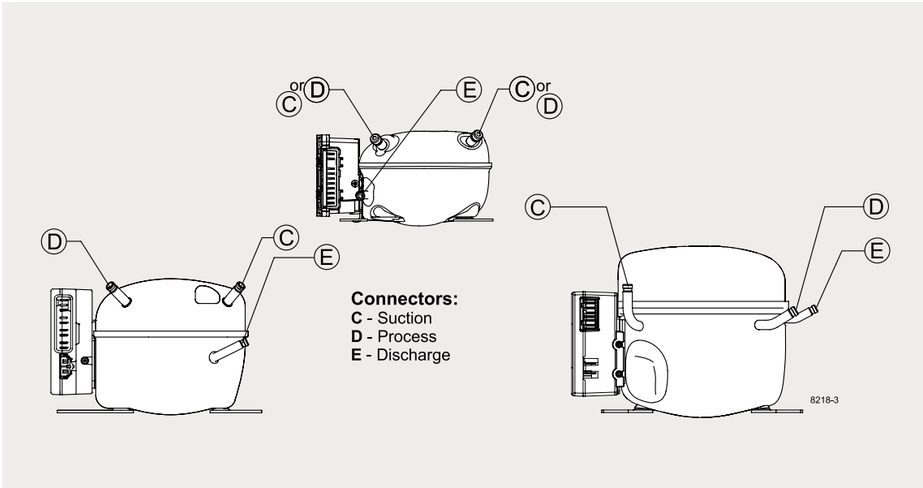

Secop BD compressors are equipped with tube connectors of thick-walled, copper-plated steel tube which have a brazeability which comes up to that of conventional copper connectors.

The connectors are welded into the compressor housing and weldings cannot be damaged by overheating during brazing.

These copper-plated steel connectors have an aluminium cap sealing which gives a tight sealing. The sealing secures that the compressors have not been opened after leaving Secop's production lines. In addition to that, the sealing makes a protecting charge of nitrogen superfluous.

3.13 MOUNTING ACCESSORIES

Mounting	Code number	Bolt / pin dimension	Compressor base hole	Type of packaging	Parts list
Bolt joint	118–1917	M6 metric	16 mm	Single pack for one compressor	I
Bolt joint	118–1918	M6 metric	16 mm	Industrial pack in any quantity	I
Snap-on	118–1947	Ø 7.3 mm	16 mm	Single pack for one compressor	V
Snap-on	118–1919	Ø 7.3 mm	16 mm	Industrial pack in any quantity	V

Parts list (4 pcs. per compressor needed)			Symbol drawings
I	Sleeve Ø 8 mm x 6.4 mm x 0.8 mm	112–2052	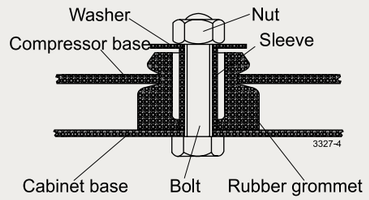
	Washer Ø 20 mm x Ø 6.7 mm x 1 mm	112–2053	
	Bolt M6 x 25 mm	681X1130	
	Nut M6	118–3659	
	Rubber grommet 16 mm	118–3661	
II	Steel pin	118–3586	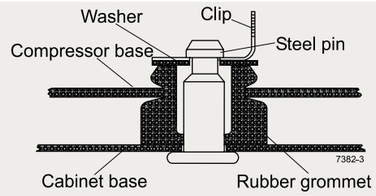
	Washer Ø 21 x Ø 8.1 mm x 0.9 mm	118–3588	
	Clip	118–3585	
	Rubber Grommet 16 mm	118–3661	

3.14 SHIPMENT POSITIONS

Shipment of refrigeration appliances in horizontal position

When refrigeration appliances are shipped in the normal vertical position, this will normally not cause any damage to the compressor. If transported in horizontal position, the compressor must be oriented as shown in the table on the next page to prevent the accumulation of oil in the muffler and subsequent risk of damage. It is important to note that the compressor must be securely fastened and well supported during transportation.

Refrigeration appliances can be safely transported in horizontal position:

- **with trucks on roads and motorways in good condition**
- **by ship in containers**
- **on railways in good condition**

Compressors	Shipment positions of refrigeration appliances – Position X must not be used				
	Connectors up	Electrical lead-in up	Connectors down	Electrical lead-in down	Base plate up
BD Micro – Series	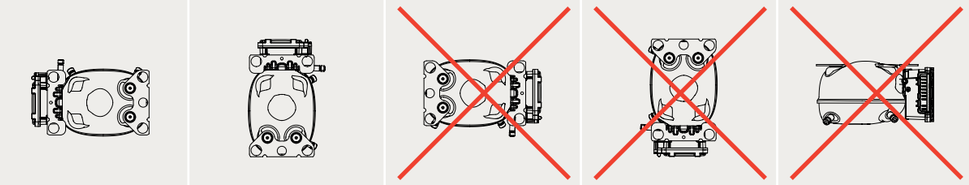				
BD – Series (P-Housing)	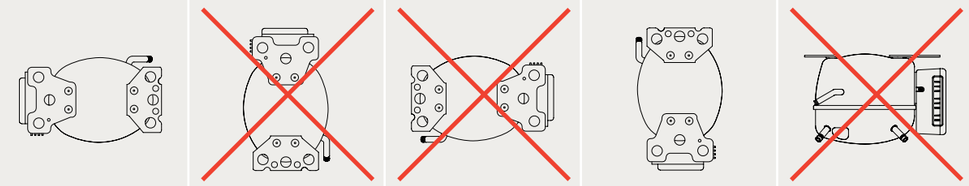				
BD – Series (T-Housing)	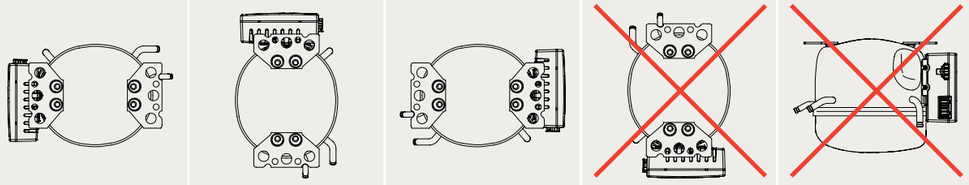				

3.15 SECTIONAL DRAWING BD P-HOUSING

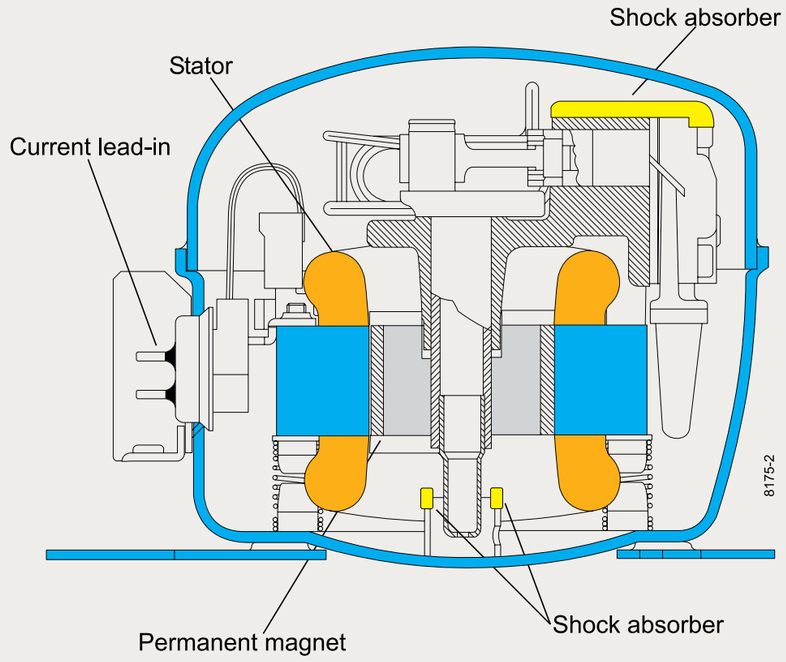

SECOP PRODUCT SELECTOR 4

selector.secop.com

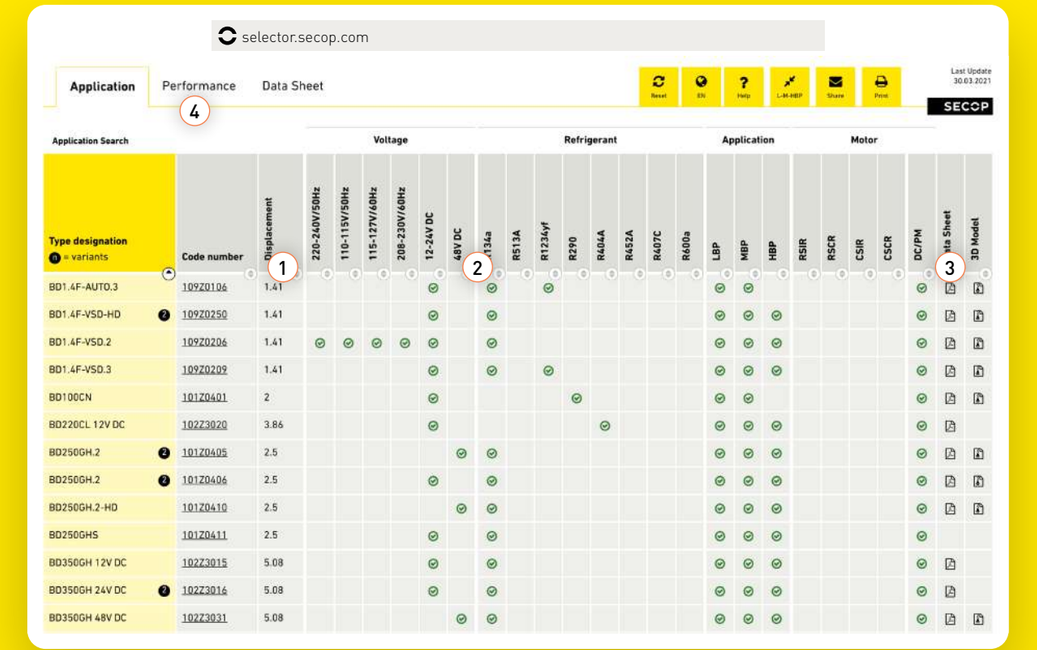

With its responsive web design, the latest version of Secop's Product Selector is working on various hardware platforms (PCs, tablets , smartphones, etc.) and features 10 languages.

The idea behind the new version is to set filters to find the right compressor for your cooling application, similar to the popular spreadsheet programs.

Also a simple data sheet search is possible via the third tab in the top menu. It is also possible to download all data sheets (or your selection) in one *.zip file or 3D model CAD files.

Functions of the Secop Product Selector – Application Search Level 1:

→ Set one or more filters for Voltage, Refrigerant, Application, Motor to get a selection of possible hits quickly.

→ Or type in the first letters of the compressor designation to display a table of compressors matching with your input (or code number).

For more technical information:

→ When you find an interesting compressor, simply click on its code number to open Application search Level 2 which gives you a quick overview about variants of this model and some more technical data.

→ Click on the pdf-symbol on the right border of the data line to open the compressor data sheet.

WORKSHEET FUNCTIONS

1

Click on the filter icon to start sorting of the table.

2

Move over the filter icon to open the filter dia-logue and set the filter.

3

Click on the pdf icon to open the datasheet.

Functions of the Secop Product Selector – Performance Search Level 1:

→ Set one or more filters for Motor, Refrigerant, or Application to get a selection of possible hits quickly.

→ Appliance-guided compressor search:
- select application area in the pull down dialogue in the top right corner
- set filter (→yes) to the desired application type listed up in right area of the table(move the table if needed: keep middle mouse button pushed while moving mouse to left or right)
- set more filters to Refrigerant, Motor and Voltage to further specializing of the results

→ Performance-guided compressor search:
- select physical units and operation condition of the performance data (dialogue in top left corner)
- type in ranges of cooling capacity or acceptable efficiency into performance filters
- click on filter icon to sort the table (capacity or efficiency)

→ Model-focused search: Type in the first letters of the compressor designation to show a table compressors matching with your input (or code number).

For more technical information:

→ When you found an interesting compressor simply click on its Designation to open Performance search Level 2 which gives you a fast overview about most important technical data.

→ Click on the pdf symbol on the right border of the data-line to open the compressor data sheet.

WORKSHEET FUNCTIONS

1

Click on the filter icon to start sorting of the table.

2

Move over the filter icon to open the filter dia-logue and set the filter.

3

Click on the pdf icon to open the datasheet.

4

Move over the filter icon to set the filter range.

SECOP GROUP: AROUND THE WORLD

SECOP

12
international partners for advanced developments

33
laboratories located in Austria, Germany, Slovakia, China, US, and Turkey

180
R&D engineers and technicians

440
patents globally

50+
countries with customer support

WE SUPPORT

UN GLOBAL COMPACT

Since 2011 Secop has been committed to the UN Global Compact corporate responsibility initiative and its principles in the areas of human rights, labor, the environment and anti-corruption.

Secop is the expert for advanced hermetic compressor technologies and cooling solutions in commercial refrigeration. We develop high performance stationary and mobile cooling solutions for leading international commercial refrigeration manufacturers and are the first choice when it comes to leading hermetic compressors and electronic controls for refrigeration solutions for light commercial and DC-powered applications.

Secop has a long track record of successful projects to adopt energy efficient and green refrigerants that feature innovative solutions for both compressors and control electronics.

- **Flensburg:** Sales and R&D
- **Turin:** Sales
- **Gleisdorf:** R&D
- **Zlaté Moravce:** R&D, Logistics and Manufacturing
- **Tianjin:** Sales, R&D, Logistics and Manufacturing
- **Atlanta:** Sales, R&D and Logistics

MOBILE COOLING

STATIONARY COOLING

Secop GmbH · Mads-Clausen-Str. 7 · 24939 Flensburg, Germany · Tel: +49 461 4941 0 · **www.secop.com**

Secop accepts no responsibility for possible errors in catalogs, brochures, and other printed material. Secop reserves the right to alter its products without notice. This also applies to products already on order provided that such alterations can be made without subsequential changes being necessary to specifications already agreed. All trademarks in this material are the property of the respective companies. Secop and the Secop logotype are trademarks of Secop GmbH. All rights reserved.

Produced by Secop | August 2021

DES.K.100.A12.02